SR 860/Miami Gardens Drive from east of I-75 to SR 823/ NW 57th Avenue Re-evaluation FM No.: 438864-1-22-02

October 4th, 2019

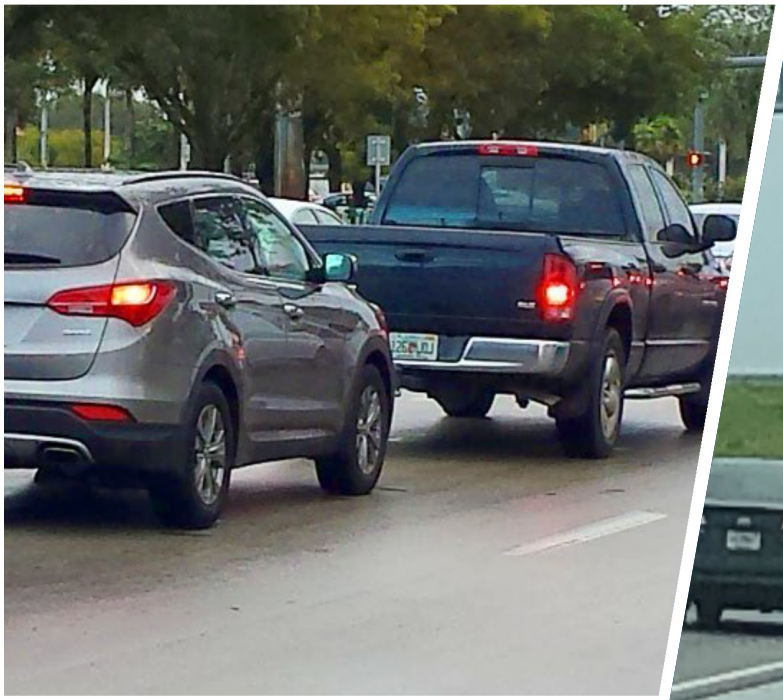

FDOT

Project Traffic Analysis Report (PTAR)

State Road 860 / Miami Gardens Drive

from east of I-75 to SR 823 / NW 57th Avenue

Re-evaluation

Miami-Dade County, Florida

Financial Project ID No. 438864-1-22-02

Prepared for:
FDOT District Six
1000 N.W. 111 Avenue,
Miami, Florida 33172.

October 2019

PROFESSIONAL ENGINEER CERTIFICATION

PROJECT TRAFFIC ANALYSIS REPORT

Project: Miami Gardens Drive, from east of I-75 to SR 823/NW 57th Avenue Re-evaluation

Financial Project ID: 438864-1-22-02

Federal Aid Project Number: n/a

This Project Traffic Analysis Report contains engineering information pertaining to the State Road 860 / Miami Gardens Drive Re-evaluation from east of Interstate I-75 to SR 823/NW 57th Avenue in Miami-Dade County, Florida. I acknowledge that the procedures and references used to develop the results contained in this report are standard to the professional practice of transportation engineering as applied through professional judgment and experience.

I hereby certify that I am a registered professional engineer in the State of Florida practicing with RS&H, Inc., and that I have prepared or approved the evaluation, findings, opinions, conclusions or technical advice for this project.

Insert Seal Picture

This item has been digitally signed and sealed by *Winston G. Harris* on the date adjacent to the seal. Printed copies of this document are not considered signed and sealed and the signature must be verified on any electronic copies.

Project Traffic Analysis Report

TABLE OF CONTENTS

1.0 Executive Summary 1-1

2.0 Introduction 2-1

2.1 Project Description 2-1

2.2 Need for the Project 2-4

3.0 Traffic Analysis Assumptions and Methodology 3-1

3.1 Area of Influence 3-1

3.2 Analysis Years 3-2

3.3 Travel Demand Forecast 3-2

3.4 Operations Analysis 3-5

4.0 Existing Conditions 4-1

4.1 Land Use 4-1

4.2 Existing Roadway Network, Pedestrian and Bicycle Facilities 4-4

4.3 Existing Transit Facilities 4-6

4.4 Existing Traffic Volumes 4-8

4.5 Existing Level of Service 4-10

4.6 Existing Conditions Multimodal LOS Analysis 4-14

4.7 Access Management 4-16

4.8 Crash Analysis 4-19

5.0 No Build Alternative 5-1

5.1 No Build Road Network 5-1

5.2 No Build Traffic Forecast 5-1

5.3 No Build Traffic Operations Analysis 5-4

5.4 No Build Alternative Multimodal Analysis 5-12

6.0 Build Alternative 6-1

6.1 Build Alternative Road Network 6-1

6.2 Build Alternative Traffic Forecast 6-4

6.3 Build Alternative Operations Analysis 6-7

6.4 Build Alternative Multimodal Analysis 6-16

6.5 Build Alternative Safety Analysis 6-19

7.0 Summary of Analysis Results 7-1

LIST OF TABLES

Table	Title	Page
Table 4.1:	Existing Land Use (1/2 Mile Buffer)	4-1
Table 4.2:	NW 73rd Street Park & Ride Lot – Patronage Summary	4-6
Table 4.3:	2016 AADT Computation Sheet	4-9
Table 4.4:	Existing Level of Service – Signalized Intersections	4-11
Table 4.5:	Existing Level of Service – Unsignalized Intersections	4-13
Table 4.6:	Existing Conditions – Multimodal LOS Analysis	4-15
Table 4.7:	Assessment of Existing Median Opening Spacing	4-17
Table 4.8:	Assessment of Existing Signal Spacing	4-18
Table 4.9:	Corridor Crash Statistics	4-21
Table 5.1:	No Build LOS – Year 2020, Signalized Intersections	5-6
Table 5.2:	No Build LOS – Year 2020, Unsignalized Intersections	5-8
Table 5.3:	No Build LOS – Year 2040, Signalized Intersections	5-9
Table 5.4:	No Build LOS – Year 2040, Unsignalized Intersections	5-11
Table 5.5:	No Build LOS – Year 2040, Multimodal LOS Analysis	5-13
Table 6.1	Build Alternative – Proposed Median Opening Modifications	6-3
Table 6.2:	Build LOS – Year 2020, Signalized Intersections	6-10
Table 6.3:	Build LOS – Year 2020, Unsignalized Intersections	6-12
Table 6.4:	Build LOS – Year 2040, Signalized Intersections	6-13
Table 6.5:	Build LOS – Year 2040, Unsignalized Intersections	6-15
Table 6.6:	2040 Build Alternative Multimodal LOS Analysis	6-18
Table 7.1	Comparison of No Build and Build Alternative	7-4

LIST OF FIGURES

Figure	Title	Page
Figure 2-1:	Project Location Map	2-3
Figure 3.1:	Design Traffic Forecasting Process Flowchart	3-4
Figure 4.1:	Existing Land Use Map	4-2
Figure 4.2:	Existing (2016) Network and Traffic Volumes	4-5
Figure 4.3:	Existing Transit Routes	4-7
Figure 5.1:	2020 No Build Network and Traffic Volumes	5-2
Figure 5.2:	2040 No Build Network and Traffic Volumes	5-3
Figure 6.1:	2020 Build Network and Traffic Volumes	6-5
Figure 6.2:	2040 Build Network and Traffic Volumes	6-6

LIST OF APPENDICES

APPENDIX A	Traffic Methodology Memorandum, MGD Re-evaluation, August 7, 2018
APPENDIX B	MGD Corridor Planning Study, Technical Memorandum No. 1 Existing Conditions
APPENDIX C	MGD Typical Sections
APPENDIX D	Existing Transit Facilities and Operating Characteristics
APPENDIX E	Synchro Output Sheets
APPENDIX F	ARTPLAN Output Sheets
APPENDIX G	MGD Re-evaluation, Project Traffic Forecasting Memorandum (PTFM), July 2019
APPENDIX H	Build Alternative Concept Plan

1.0 Executive Summary

INTRODUCTION

The Florida Department of Transportation (FDOT) is conducting a Re-evaluation for the segment of Miami Gardens Drive (MGD) from east of I-75 (MP 0.438) to SR 823/NW 57th Avenue (MP 3.664) – approximately 3.2 miles. The Re-evaluation follows from a corridor planning study which recommended widening the existing arterial from four lanes (2 eastbound + 2 westbound) to six lanes (3 eastbound + 3 westbound). The proposed improvements also include the implementation of bicycle lanes and additional turn lanes at key intersections to improve operational efficiency and safety. This Project Traffic Analysis report (PTAR) provides an assessment of traffic operations and safety conditions along the MGD corridor under existing year (2016) conditions, future year No Build conditions and future year Build conditions. The information provided herein demonstrates the safety and operational benefits of the proposed Build Alternative.

The purpose of this project is to develop recommended transportation improvements for the segment of Miami Gardens Drive, from approximately 770 feet west of NW 87th Avenue to SR 823/NW 57th Avenue, in Miami-Dade County, Florida. The need for these improvements relates to transportation demand, safety and socio-economic needs. The existing corridor experiences significant congestion during peak periods and several locations along the corridor have a history of abnormally high crash rates. If no improvements are implemented, traffic congestion and crashes will increase as future travel demand increases. Furthermore, capacity improvements on MGD are necessary to support the future development and economic growth in northern Miami-Dade County.

EXISTING CONDITIONS

The existing (2016) MGD typical section consists of 4 lanes (2 eastbound + 2 westbound) with local widening at intersections for turn lanes. The estimated Annual Average Daily Traffic (AADT) along the corridor ranges from approximately 31,400 to 45,800. The study segment includes 11 signalized intersections and 6 unsignalized (stop sign control) intersections. Substandard level of service (LOS E or F) is experienced at the following signalized intersections during the AM and/or PM peak periods:

- MGD at NW 87th Avenue (signalized)
- MGD at NW 73rd Avenue (signalized)
- MGD at NW 68th Avenue (signalized)
- MGD at NW 67th Avenue/Ludlam Road (signalized)
- MGD at NW 62nd Avenue (signalized)
- MGD at SR 823/NW 57th Avenue/Red Road (signalized)

Access management is substandard along MGD. The corridor is classified as an Access Class 3 facility with minimum spacing of 2,650 feet between full median openings or signals, per access management criteria. Currently, there are 28 median openings along this corridor within the study area. All of the existing median openings have substandard spacing, and in most cases , the variance is more than 50% below the standard. Similarly, the spacing of existing signals violates the access management standards in 10 of the 11 locations, and the spacing variance exceeds 50% at four signal locations.

Analysis of historical crash records from 2012 to 2016 indicate that the corridor experienced a total 1,450 crashes during the five-year period or an of 290 crashes per year. These resulted in 3 fatalities and 502 injury crashes. Excessive congestion and inadequate access management control were identified as probable causal factors for crashes experienced along the corridor. The economic loss resulting from crashes on the corridor equate to approximately $35.8M per year.

FUTURE NO BUILD CONDITIONS

The future No Build condition incorporates no roadway improvements along MGD. MGD will continue to experience substantial traffic growth under No Build Conditions. By year 2040 AADT along MGD will range from approximately 40,000 to 58,000 vehicles per day. This growth in traffic includes traffic generated along the corridor resulting from the planned American Dream Miami (ADM) and Graham Properties projects, west of NW 87th Avenue. With the continued growth in traffic, operations along MGD will continue to deteriorate in the future No Build Condition. By year 2040, all but two of the eleven signalized intersections along MGD will experience substandard level of service (LOS E or F) during the AM and/or PM peak periods. Average operating speeds during AM and PM peak periods are expected to range from approximately 10.5 mph (LOS F) to 12.7 mph (LOS F). In addition, segments along the corridor will continue to experience abnormally high crash rates, similar to the existing conditions.

FUTURE BUILD CONDITIONS

The future Build Alternative will widen MGD to incorporate a typical section consisting of six lanes (3 EB + 3WB) plus the bicycle lanes. The Build Alternative will also add turn lanes at critical intersections, namely, NW 87th Avenue, NW 73rd Street, NW 67th Avenue and NW 57th Avenue. MGD will continue to experience substantial traffic growth under the Build Alternative. By year 2040, AADT along MGD will increase to a range of approximately 44,000 to 64,000 vehicles per day. This growth includes traffic generated along the corridor resulting from the planned American Dream Miami (ADM) and Graham Properties projects.

Analyses indicate that the Build Alternative will provide substantial operational and safety benefits when compared to the No Build Alternative. These benefits resulting from the Build Alternative include the following:

- Typical Section: The Build alternative widens MGD to provide increased capacity to support future travel demand needs. The addition of bike lanes is consistent with FDOT's current design standards and policy for multi-modal accommodations.

- Intersection Operations: The Build Alternative reduces the number of intersections operating at substandard levels (LOS E & F) during the design year (2040) peak periods. In the No Build Alternative, 9 signalized intersections will operate at LOS E/F whereas in the Build Alternative this is reduced to 6 intersections.
- Pedestrian Operations: The Build Alternative improves pedestrian operations from LOS E (2040 No Build) to LOS D (2040 Build). This improvement in pedestrian operations results mainly from the reduction in congestion level along the corridor within the lanes adjacent to the sidewalks.
- Bicycle Operations: The Build Alternative improves bicycle operations from LOS E (2040 No Build) to LOS C (2040 Build). This improvement in bicycle operations results from the provision of bicycle lanes in the Build Alternative.
- Bus Operations: Bus operations are comparable in the No Build (LOS B) and Build (LOS B) alternative. Bus operations are comparable in both conditions as no transit improvements are included in the Build Alternative, except for upgrading bus stops to include shelter and bench.
- Crash Reduction: The Build Alternative will improve safety conditions throughout MGD resulting in an estimated crash reduction of approximately 58 crashes per year. This equates to an annual cost savings of approximately $7.17M per year. These safety benefits result from the anticipated reduction of traffic congestion and improvements in bicycle facilities incorporated offered with the Build Alternative. Further safety benefits will also result from the proposed access modifications incorporated in the Build Alternative.

The results of the traffic analyses performed for the MGD Re-evaluation demonstrate that the proposed Build Alternative meets the objectives the project. As presented above, the proposed improvements will provide congestion relief, enhance safety and provide additional capacity to support the future growth in transportation demand and socio-economic needs in northern Miami-Dade County. It is therefore recommended that the Build Alternative be advanced for final design and construction.

2.0 Introduction

2.1 Project Description

SR 860/Miami Gardens Drive (MGD) is a state minor, east-west arterial located in northern Miami-Dade County, Florida. The existing arterial consists of four lanes (two eastbound and two westbound) with a raised central median. The Florida Department of Transportation (FDOT) is conducting a Re-evaluation for the segment of MGD from east of I-75 (MP 0.438) to SR 823/NW 57th Avenue (MP 3.664) – approximately 3.2 miles. Figure 2.1 depicts a location map for the study segment. This re-evaluation was preceded by the following related studies:

- MGD PD&E Study, 2006: This initial PD&E Study authorized the widening of MGD from four lanes to six lanes through the study limits. Notably, these improvements did not include bicycle lanes.
- MGD PD&E Study Reevaluation. 2009: This reevaluation authorized the advancement of limited improvements to the Miami Gardens Drive Corridor. The improvements advanced through design and construction included no capacity improvements – the number of through lanes throughout the corridor were maintained per existing conditions.
- MGD Corridor Planning Study, 2018: This corridor planning study reexamined the long-term vision for MGD consistent with the FDOT's current policies, design standards, changes to the transportation network and new land use developments, since the originally approved 2006 PD&E Study. Specifically, the planning study examined options for multi-modal accommodations and potential traffic impacts of the proposed American Dream Miami (ADM), proposed to be located immediately west of the study area. Resulting from the corridor planning study, a new design concept consisting of six lanes (3 eastbound + 3 westbound) plus bicycle lanes was selected for advancement to the design phase.

This Project Traffic Analysis report (PTAR) serves as the traffic analysis document for the MGD Re-evaluation. It provides an assessment of traffic operations and safety conditions along the MGD corridor under existing year (2016) conditions, future year No Build conditions and future year Build conditions. The information provided herein demonstrates the safety and operational benefits of the proposed Build Alternative.

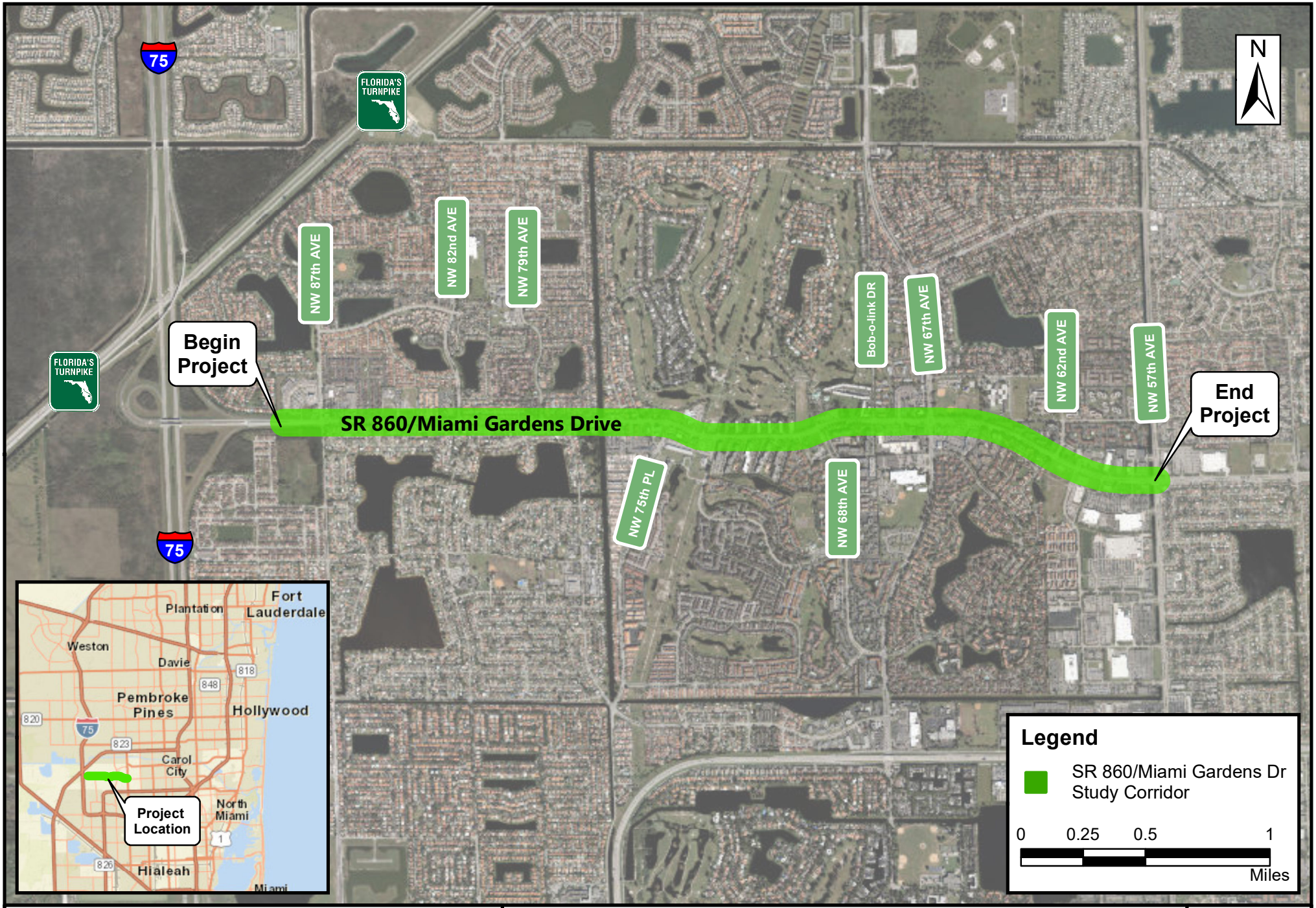

FDOT

SR 860/ Miami Gardens Drive Re-evaluation

Project Location Map

Figure 2.1

2.2 Need for the Project

The purpose of this project is to develop recommended transportation improvements for the segment of Miami Gardens Drive, from approximately 770 feet west of NW 87th Avenue to SR 823/NW 57th Avenue, in Miami-Dade County, Florida. The need for these improvements relates primarily to transportation demand, safety and socio-economic demands. These needs are elaborated below.

- **Congestion Relief and Transportation Demand:** Existing (2016) traffic conditions along MGD are characterized by congestion with substandard operating conditions throughout much of the corridor during both AM and PM peak periods. MGD is recognized by Miami-Dade County as one of the top 10 most congested corridors. Travel demand forecasts indicate that the corridor will experience continued growth through year 2040. Existing year (2016) daily traffic volumes range from approximately 31,000 to 46,000 vehicles per day. Forecasted daily volumes for horizon year 2040 are expected to exceed 60,000 vehicles per day along segments of the corridor. Hence, with no improvements, the project corridor will continue to experience high delays and increasing congestion through the year 2040. Driving conditions for commuters will further deteriorate, falling well below acceptable level of service (LOS) standards.

- **Safety:** A review of the most recent 5-year (2012 – 2016) crash records shows that 1,450 crashes were reported along the subject segment of MGD. These reported crashes included three (3) fatalities and over 500 injuries. Furthermore, segments of the corridor have repeatedly appeared on the FDOT's listing of high crash spots and high crash segments. Several contributing factors have been identified including inadequate access control, traffic congestion and excessive queueing at intersections. Safety improvements are needed along the corridor to reduce the high frequency of crashes that is currently experienced. Carrying out these safety improvements is consistent with Florida's Strategic Highway Safety Plan and commitment to reducing fatalities and serious injuries on state highways.

- **Socio-Economic Demands:** MGD from I-75 to US 1 provides connectivity to support much of the social and economic vitality of northern Miami-Dade County. It is a main east-west transportation connector for several major north-south arteries, including I-75, I-95 and US 1. These north-south facilities provide regional access to communities throughout Southeast Florida. The eastern end of MGD contains an important retail district, which includes the Aventura Regional Mall. The Hard Rock Stadium, home to the Miami Dolphins football team, is another major attraction near the corridor. The western end of the corridor is predominantly residential and has seen rapid growth in recent years. This growth at the western end of the corridor is expected to continue with the planned major retail and entertainment activity centers west of I-75. The project improvements will support the future development and economic growth by improving access to areas in northern Miami-Dade County.

3.0 Traffic Analysis Assumptions and Methodology

The traffic analysis methodology and analysis assumptions applied for the MGD Re-evaluation is documented in the ***Traffic Methodology Memorandum, SR 860/Miami Gardens Drive from I-75 to SR 823/NW 57th Avenue Re-evaluation, August 7, 2018***. The memorandum was processed and approved through the FDOT's electronic review comments (ERC) process. The memorandum outlines the criteria, assumptions, processes, analyses and documentation requirements for the project. This memorandum is included with the PTAR under Appendix A. The following summarizes some of the more prominent issues covered under the traffic methodology memorandum.

3.1 Area of Influence

The area of influence extends along Miami Gardens Drive from east of NW 87th Avenue to SR 823/NW 57th Avenue. It includes the following project intersections:

1. NW 87th Avenue
2. Shopping Center Rear Entrance (East of NW 87th Avenue)
3. NW 84th Court
4. Mother of Our Redeemer Catholic School Entrance
5. NW 82nd Avenue
6. NW 79th Avenue
7. Wentworth Drive
8. Oakmont Drive
9. NW 75th Place
10. NW 73rd Avenue
11. NW 68th Avenue
12. Bob-O-Link Drive
13. Ludlam Road/NW 67th Avenue

14. NW 62nd Avenue

15. NW 59th Avenue

16. Shopping Center Entrance (Between NW 59th and NW 57th Avenue)

17. SR 823/NW 57th Avenue

3.2 Analysis Years

The analysis years for the project were determined as follows:

- Existing year: 2016
- Opening year: 2020
- Interim year: 2030
- Design year: 2040

3.3 Travel Demand Forecast

This study utilizes Southeast Florida Regional Planning Model (SERPM) v7. The SERPM is a regional Activity Based Model (ABM) developed and maintained by the FDOT. The SERPM is a Time of Day Model capable of producing forecasts for multiple peak and off-peak periods as well as a daily 24-hour period. The SERPM includes a 2010 Base Year and a 2040 Horizon Year. It is the adopted travel demand forecasting tool for FDOT and the regional Metropolitan Planning Organizations (MPOs).

Existing Year (2016) Traffic Volumes: Existing year (2016) annual average daily traffic (AADT), AM and PM peak hour volumes were developed directly from 2016 field counts. These field counts are documented in the associated ***MGD Corridor Planning Study, Technical Memorandum No. 1 Existing Conditions, January 5, 2017.*** This report is included under Appendix B for reference.

Future Years Traffic Forecasts: The future years traffic forecasts were developed per the process presented in Figure 3.1. The forecasting process utilizes SERPM 7 models validated for a subarea covering an approximate 2-mile buffer around the study corridor.

Models were developed for 2016 conditions, 2040 No Build and 2040 Build conditions. The model networks and Traffic Analysis Zones (TAZ) data were updated to incorporate recently approved projects that were not included in the approved MPO model. Notable among these new projects are:

- American Dream Miami (ADM) and Graham Properties projects
- Opening of the overpass bridge at NW 170th Street and I-75

Development of peak hour volumes involved applying diurnal factors to the peak period volumes generated by SERPM. Diurnal factors are estimated from the 2016 traffic counts and computed as the ratio of peak hour volume/peak period volume. Following this process, peak hour directional volumes and intersection turning movement volumes were estimated using the SERPM subarea assignments. The estimated turning movement volumes were adjusted, as necessary, based on reasonableness checks. It should be noted that this forecasting process does not use the traditional K-factors, D-factors and turning movement software, such as TM-Tool and TURNS-5.

Figure 3.1: Design Traffic Forecasting Process Flowchart

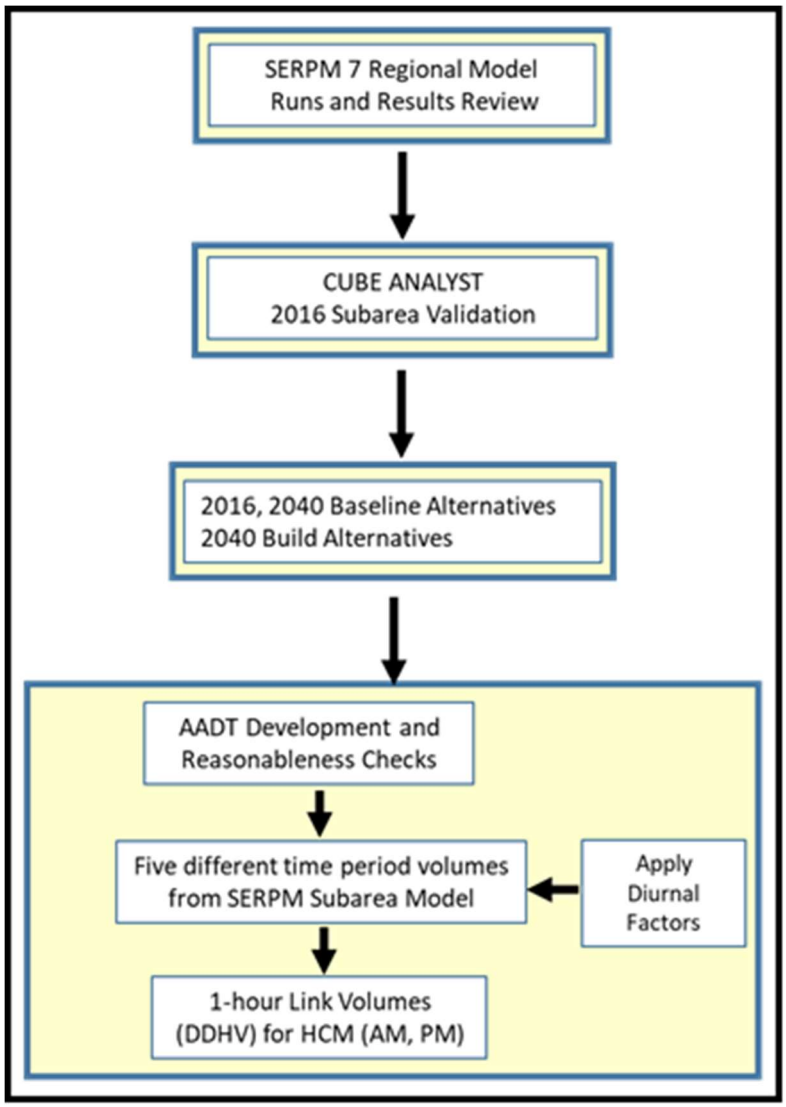

3.4 Operations Analysis

Traffic operations analyses were performed based on procedures specified in the Highway Capacity Manual (HCM) 2010. The HCM 2010 module in Synchro (version 10) was used for intersection level of service analysis. Synchro models were calibrated in accordance with guidelines provided in the FDOT's Traffic Analysis Handbook, March 2014. The Re-evaluation utilized Synchro models that were previously calibrated for the related MGD Corridor Planning Study, completed in 2018.

Level of Service conditions for multimodal facilities (bicycle, pedestrian and buses) were assessed in accordance with 2013 FDOT Quality/Level of Service Handbook. Computations were performed using the FDOT's conceptual planning analysis tool ARTPLAN.

4.0 Existing Conditions

The study corridor extends along Miami Gardens Drive from approximately 770 feet west of NW 87th Avenue to SR 823/NW 57th Avenue in northwest Miami-Dade County. The corridor is approximately 3.2 miles long and consists of 11 signalized intersections, 6 unsignalized intersections and one emergency fire station signal. A minimum of two eastbound lanes and two westbound lanes are provided throughout the corridor with local widening at intersections to provide auxiliary through lanes and turn lanes. MGD is classified as a State Minor Arterial with Access Class 3 designation and posted speed limit of 40 miles per hour (mph). The following describes the existing year (2016) conditions.

4.1 Land Use

The project corridor is located in the north-central area of unincorporated Miami-Dade County, east of I-75. Figure 4.1 graphically depicts the existing land uses within a one-half-mile buffer of the study corridor. Land uses are tabulated in Table 4.1.

Table 4.1: Existing Land Use (1/2 Mile Buffer)

Land Use Category	Percentage of Total
Residential	41%
Transportation	20%
Recreational	10%
Water	9%
Commercial / Industrial	7%
Vacant	4%
Government	3%
School	3%
Utilities	1%
Church / Religious	1%
Pasture	<1%
Hospital	<1 %
All Land Use Categories	100%

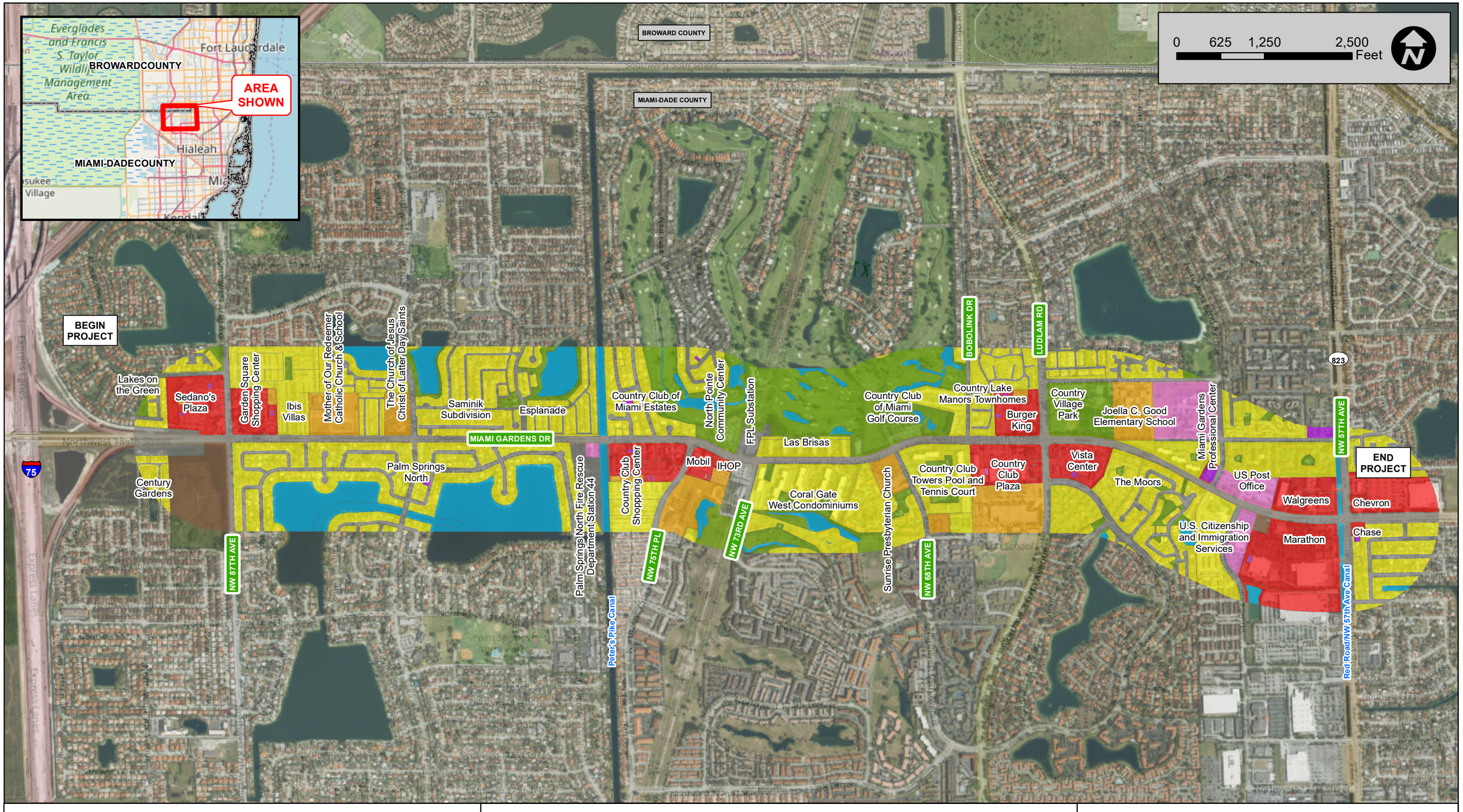

SR 860 / Miami Gardens Drive
from East of I-75 to SR 823 / NW 57th Avenue
Re-Evaluation
FPID No.: 438864-1-22-01
FDOT - District 6 / Miami-Dade County

Legend

Existing Land Use

- Commercial
- Governmental
- Institutional
- Medical
- Open Space
- Recreational
- Residential
- Transportation / Utility
- Water
- County Boundary

Figure 4.1
Existing Land Use

Source: Miami-Dade County, 2018

The dominant land use within the project corridor is Residential. Residential makes up 41% of the project area and includes Single-Family, Low-Density (Under 2 DU/Gross Acre) to High-Density (Over 5 DU/Gross Acre, other than Townhouses, Duplexes, and Mobile Homes), Multi-Family, Low-Density (Under 25 DU/Gross Acre) and High-Density (Over 25 DU/Gross Acre), Townhouses, and Two-Family (Duplexes). The single-family home communities adjacent to the project include Palm Springs North, Esplanade, Lakes on the Green, Century Gardens, The Moors, and Country Club of Miami Estates. The multi-family complexes adjacent to the project include Coral Gate, Country Club Towers, Mediterranean Village, Ibis Villas, San Mateo, Las Brisas, Country Club of Miami Condominiums, and Villa Esperanza Apartments.

Transportation (20% of total land use) accounts for the second largest land use category followed by recreational (10%). Recreational areas include, the golf courses associated with the Country Club of Miami, and county parks scattered throughout the project corridor. Commercial developments are concentrated near major intersections, such as: NW 57th Avenue; NW 67th Avenue and NW 87th Avenue. Noise sensitive sites account for about 55% of the existing land use. Noise sensitive sites consists of schools, churches, residential, recreational and three commercial sites (Academy for Young Learners, Carrabba's Italian Grill and Kiddie Corner Academy).

4.2 Existing Roadway Network, Pedestrian and Bicycle Facilities

The existing MGD typical section consists of a sub-urban normal crown section with four 12-foot lanes (2 EB + 2 WB), a raised median, and valley gutters along the outside edge of pavement on either side of the road (see typical sections under Appendix C). The existing right-of-way varies from 105 feet to 110 feet with local widening at select intersections. The existing 5- to 7-foot wide sidewalks run along the entire corridor with the back of sidewalk abutting the north and south right-of-way lines. All major side streets within the project's limits have north-south sidewalks that connect to the MGD east-west sidewalk/pedestrian network. In addition, crosswalks are provided at signalized intersections. There are no designated or undesignated bicycle facilities within the project limits. During field reviews, several bicyclists were observed using the sidewalks along the corridor.

Photo depicting existing typical section

Cyclists use existing sidewalks

The study corridor includes 11 signalized intersections and 6 unsignalized intersections. Figure 4.2 depicts the lane configurations at the project intersections, along with the locations that operate under signal control and locations that are unsignalized (stop sign control on side street). The lane configuration at all project intersections include a minimum of two eastbound through lanes and two westbound through lanes. Auxiliary through lanes and/or turn lanes are provided at several intersections, as noted in Figure 4.2.

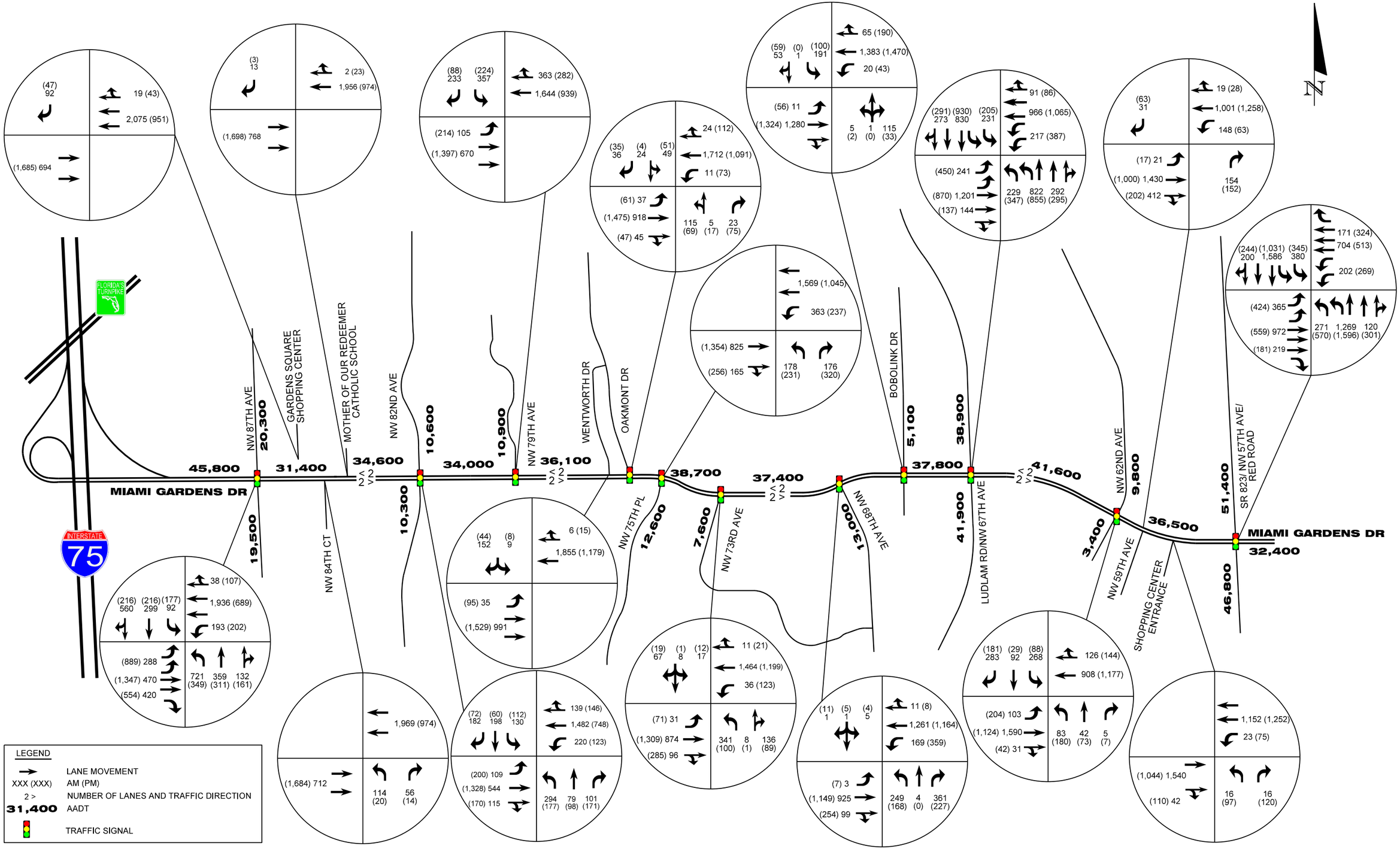

FDOT

SR 860/Miami Garden Drive Re-evaluation
From east of I-75 to SR 823/NW 57th Avenue

Existing (2016) Network and Traffic Volumes

Figure 4-2

4.3 Existing Transit Facilities

Figure 4.3 displays the existing transit routes within the project vicinity. MGD is serviced by seven (7) bus routes operated by Miami-Dade County. Route maps for these services are provided in Appendix D. Included among these is the 95 Express Golden Glades bus service. This express bus provides service during weekday peak periods with headways ranging from approximately 30 minutes to 50 minutes. Other routes serving the corridor include: Route 54; Route 183; Route 267; Route 73; Route 99 and Route 286. These bus routes provide services with headways ranging from approximately 10 minutes to 30 minutes during weekday peak periods.

The MGD bus routes are supported by 27 bus stops (14 westbound and 13 eastbound) spaced at approximately 1,200 feet. Twenty-one (21) of the bus stops are fully equipped with shelters, benches and schedules, while six (6) bus stops are equipped with benches only. A park-and-ride lot is located on the southwest corner of MGD and NW 73rd Street. The park-and-ride lot provides 136 spaces. Ridership data from Miami-Dade County indicate that the NW 73rd Street Park-and-Ride Lot is underutilized with an average monthly occupancy of only 9% (see Patronage Summary in Table 4.2).

Table 4.2: NW 73rd Street Park & Ride Lot – Patronage Summary

Month	Actual Available Spaces	Actual Occupancy	Percent Occupancy
January, 2016	136	12	9%
February, 2016	136	16	12%
March, 2016	136	15	11%
April, 2016	136	14	10%
May, 2016	136	9	7%
June, 2016	136	8	6%
January - June, 2016	**136**	**12**	**9%**

Source: Miami-Dade County, Ridership Technical Report

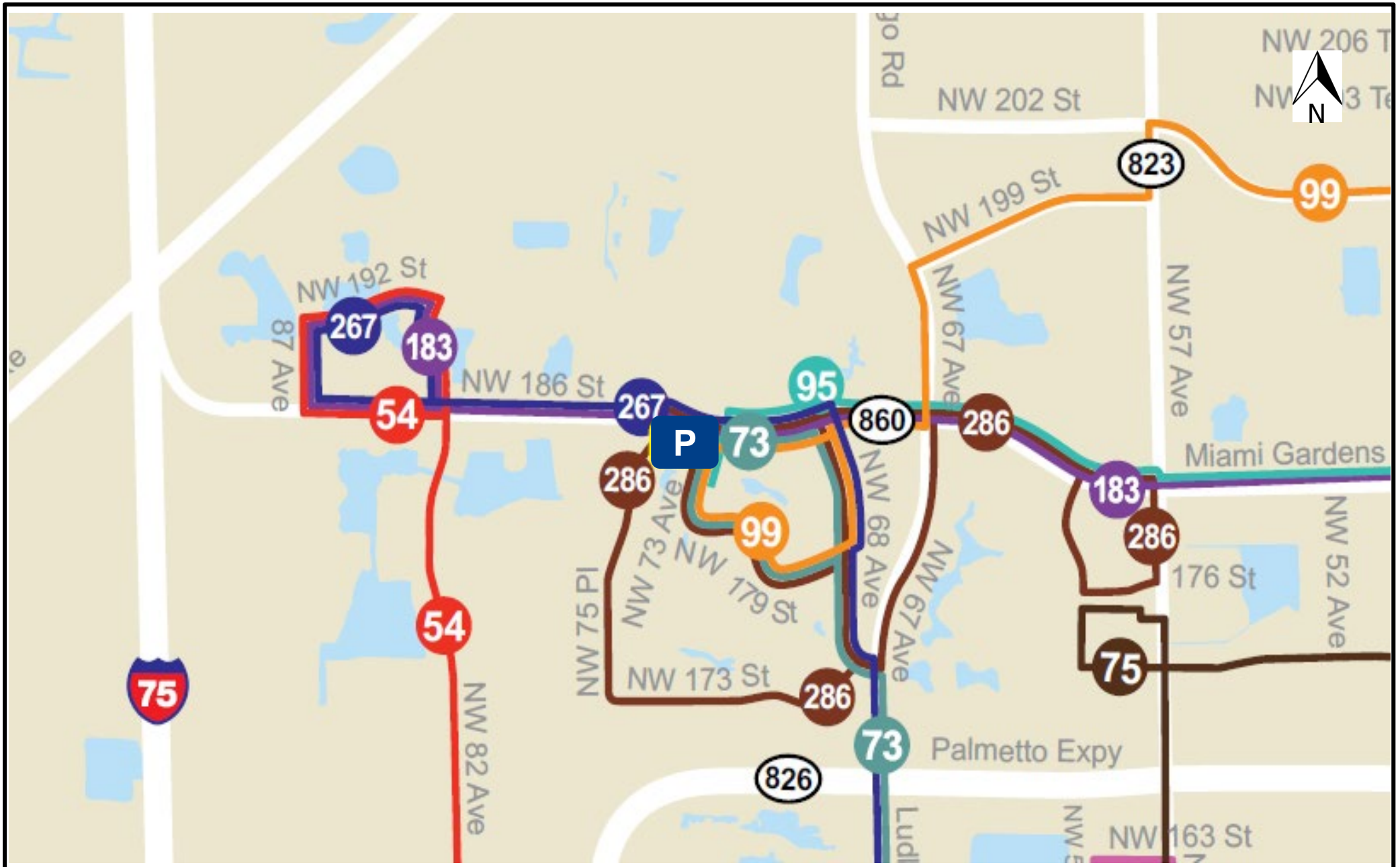

FDOT SR 860 / Miami Gardens Drive Re-evaluation	Existing Transit Routes	Figure 4.3

4.4 Existing Traffic Volumes

Traffic counts were collected in order to establish the traffic flow characteristics for the existing year (2016) along MGD. The data collection included 72-hour continuous machine counts and seven-hour intersection turning movement counts. All counts were collected in May 2016. The turning movement counts were collected for three hours during the AM peak period (6:00 AM to 9:00 AM) and four hours in the PM peak period (3:00 PM to 7:00 PM). The detailed traffic counts are included under Appendix B: ***MGD Corridor Planning Study, Technical Memorandum No. 1, Existing Conditions.***

Data from the 72-hour machine counts were adjusted using seasonal correction factors (1.00) and axle correction factors (0.98) to develop existing year (2016) estimated annual average daily traffic (AADT) along each road segment. The applicable axle correction factor and seasonal correction factor were obtained from the 2015 Florida Traffic Information (FTI). Table 4.3 is a computation sheet for the AADTs and results are depicted in Figure 4.2. The data indicates that the existing AADT on MGD ranges from approximately 31,400 to 45,800 vehicles per day. The most heavily used side streets are: NW 57th Avenue (51,400 AADT), NW 67th Avenue (41,900 AADT) and NW 87th Avenue (20,300 AADT).

Data gathered from the turning movement counts was used to develop system-wide AM (7:15 AM to 8:15 AM) and PM (5:30 PM– 6:30 PM) peak hour volumes for the study corridor. The system-wide peak hours were determined by evaluating the peaking characteristics of the three most heavily used intersections in the corridor, i.e., NW 87th Avenue, NW 67th Avenue and NW 57th Avenue. The peak hour volumes from the raw counts were adjusted to develop balanced traffic flows across the corridor. The resulting final balanced AM and PM peak hour volumes are depicted in Figure 4.2.

Table 4.3: 2016 AADT Computation Sheet

	Count Location	3-Day ADT	Seasonal Factor	Axle Factor	AADT
Miami Gardens Drive - EB / WB	Miami Gardens Drive 200' W of NW 87th Ave	46700	1.00	0.98	45800
	Miami Gardens Drive 800' E of NW 87th Ave	32100	1.00	0.98	31400
	Miami Gardens Drive 800' W of NW 82th Ave	35300	1.00	0.98	34600
	Miami Gardens Drive 400' W of NW 79th Ave	34700	1.00	0.98	34000
	Miami Gardens Drive 400' W of Canal	36800	1.00	0.98	36100
	Miami Gardens Drive 200' E of NW 75th Place	39500	1.00	0.98	38700
	Miami Gardens Drive 100' E of NW 73rd Ave	38200	1.00	0.98	37400
	Miami Gardens Drive 200' W of NW 67th Ave	38600	1.00	0.98	37800
	Miami Gardens Drive 1000' E of NW 67th Ave	42500	1.00	0.98	41600
	Miami Gardens Drive 200' W of NW 57th Ave	37200	1.00	0.98	36500
	Miami Gardens Drive 200' E of NW 57th Ave	33000	1.00	0.98	32400
Miami Gardens Drive Cross Streets - NB / SB	NW 87th Ave 800' N of Miami Gardens Drive	20700	1.00	0.98	20300
	NW 87th Ave 200' S of Miami Gardens Drive	19900	1.00	0.98	19500
	NW 82nd Ave 200' N of Miami Gardens Drive	10800	1.00	0.98	10600
	NW 82nd Ave 200' S of Miami Gardens Drive	10600	1.00	0.98	10300
	NW 79th Ave 200' N of Miami Gardens Drive	11100	1.00	0.98	10900
	NW 75th Place 200' S of Miami Gardens Drive	12900	1.00	0.98	12600
	NW 73rd Ave 200' S of Miami Gardens Drive	7800	1.00	0.98	7600
	NW 68th Ave 200' S of Miami Gardens Drive	13300	1.00	0.98	13000
	Bob-O-Link Drive 200' N of Miami Gardens Drive	5200	1.00	0.98	5100
	NW 67th Ave 500' N of Miami Gardens Drive	39700	1.00	0.98	38900
	NW 67th Ave 200' S of Miami Gardens Drive	42700	1.00	0.98	41900
	NW 62nd Ave 200' N of Miami Gardens Drive	10000	1.00	0.98	9800
	NW 62nd Ave 200' S of Miami Gardens Drive	3500	1.00	0.98	3400
	NW 57th Ave 200' N of Miami Gardens Drive	52400	1.00	0.98	51400
	NW 57th Ave 200' S of Miami Gardens Drive	47800	1.00	0.98	46800

4.5 Existing Level of Service

Level of Service (LOS) analyses were conducted for the existing (2016) conditions for the intersections in the study network. The analyses were conducted in accordance with procedures of the Highway Capacity Manual, 2010 Edition (HCM 2010). Synchro models were developed for performing the level of service analyses of the signalized and unsignalized intersections. The road intersection geometry and peak hour traffic volumes used in the analyses are consistent with the information presented in previous sections of this report and depicted in Figure 4.2. Signal timings used for the analysis were obtained from Miami-Dade County and are included in report under Appendix B. Peak Hour Factors and percent trucks are based on the traffic count data gathered for the study.

Detailed HCM output sheets from the level of service analyses are contained under Appendix E. The results are summarized in Table 4.4 and Table 4.5. The results indicate that 6 existing signalized intersections experience substandard (LOS E or LOS F) operating conditions during the AM and/or PM peak period. These intersections include: NW 87th Avenue, NW 73rd Avenue, NW 68th Avenue, NW 67th Avenue, NW 62nd Avenue and NW 57th Avenue. In addition, substandard operating conditions are experienced on the minor street approaches of five of the six unsignalized intersections. These results suggest that during AM and PM peak periods, excessive delays are experienced at several intersections along the corridor and this is consistent with field observations.

Table 4.4: Existing Level of Service – Signalized Intersections

Intersection	Intersection Approach			Overall Intersection	
	App.	Delay (sec)	LOS	Delay (sec)	LOS
		AM (PM)	AM (PM)	AM (PM)	AM Peak
NW 87th Ave	NB	280.7 (203.7)	F (F)	179.5 (78.7)	**F (E)**
	SB	365.9 (99.1)	F (F)		
	EB	80.6 (42.5)	F (D)		
	WB	92.8 (64.1)	F (E)		
NW 82nd Ave	NB	49.2 (75.4)	D (E)	47.3 (25.2)	D (C)
	SB	67 (56.6)	E (E)		
	EB	32.6 (19.4)	C (B)		
	WB	46.9 (3.2)	D (A)		
NW 79th Ave	SB	62.5 (66.9)	E (E)	31.1 (12.2)	C (B)
	EB	10.2 (1.7)	B (A)		
	WB	30.7 (11.6)	C (B)		
W Oakmont Dr[1]	NB	147 (74)	F (E)	22.1 (13.7)	C (B)
	SB	75.3 (72.4)	E (E)		
	EB	13.3 (6.2)	B (A)		
	WB	9.2 (10)	A (B)		
NW 75th Pl	NB	79.4 (109.8)	E (F)	14.5 (32.9)	B (C)
	EB	10.4 (21.7)	B (C)		
	WB	3.8 (13.1)	A (B)		
NW 73rd Ave	NB	380.3 (65.7)	F (E)	80.2 (6.5)	**F** (A)
	SB	54.3 (61)	D (E)		
	EB	1.7 (1.6)	A (A)		
	WB	28.5 (1.5)	C (A)		

Notes: (1) Results reported from Synchro 10 HCM2000 report, since HCM2010 not capable of reporting results.

Table 4.4 (continued): Existing level of Service – Signalized Intersections

Intersection	Intersection Approach			Overall Intersection	
	App.	Delay (sec)	LOS	Delay (sec)	LOS
		AM (PM)	AM (PM)	AM (PM)	AM (PM)
NW 68th Ave	NB	70.8 (75.4)	E (E)	24.4 (98.8)	C **(F)**
	SB	40.1 (52.8)	D (D)		
	EB	22.9 (2.6)	C (A)		
	WB	3.7 (194.2)	A (F)		
Bob-O-Link Dr	NB	43.6 (63.1)	D (E)	22.5 (9.7)	C (A)
	SB	52.8 (67.9)	D (E)		
	EB	2.7 (0.8)	A (A)		
	WB	33.5 (9.2)	C (A)		
Ludlam Rd / NW 67th Ave	NB	46.4 (54.2)	D (D)	84.7 (60.2)	**F** (E)
	SB	46.9 (51.2)	D (D)		
	EB	148 (61.9)	F (E)		
	WB	83.7 (72.3)	F (E)		
NW 62nd Ave	NB	65.1 (147.3)	E (F)	49.8 (74.9)	D **(E)**
	SB	178.5 (97.1)	F (F)		
	EB	19.2 (105.1)	B (F)		
	WB	19.8 (24.2)	B (C)		
Red Rd / NW 57th Ave	NB	51.4 (72.3)	D (E)	59.5 (71.5)	**E (E)**
	SB	52.6 (53.3)	D (D)		
	EB	70.9 (83)	E (F)		
	WB	70.1 (84.4)	E (F)		

Notes: (1) Results reported from Synchro 10 HCM2000 report, since HCM2010 not capable of reporting results.

Table 4.5: Existing Level of Service – Unsignalized Intersections

Intersection	Lane Group	Delay		LOS	
		AM Peak	PM Peak	AM Peak	PM Peak
Shopping Center Entrance (East)	EB	0	0	A	A
	WB	0	0	A	A
	SB	53.8	14.9	F	B
NW 84th Ct	EB	0	0	A	A
	WB	0	0	A	A
	NB	371.7	166.8	F	F
Catholic School	EB	0	0	A	A
	WB	0	0	A	A
	SB	22.6	12.5	C	B
Wentworth Dr.	EB	0.7	0.8	A	A
	WB	0	0	A	A
	SB	244	57.7	F	F
NW 59th Ave	EB	0.1	0.2	A	A
	WB	4.2	0.6	A	A
	NB	48.1	19.6	E	C
	SB	13.2	16.5	B	C
Shopping Center Entrance (West)	EB	0	0	A	A
	WB	0.3	0.7	A	A
	NB	144.1	407.9	F	F

4.6 Existing Conditions Multimodal LOS Analysis

Level of service analysis for multimodal facilities (pedestrian, bicycle and bus facilities) were computed for the existing (2016) conditions using ARTPLAN. This FDOT conceptual planning analysis tool performs multimodal LOS analyses based on procedures in FDOT's 2013 Quality/Level of Service Handbook. The following were assumed for the analyses:

- The existing (2016) network was assumed as described under Section 4.2 of the PTAR.
- The existing (2016) traffic volumes were assumed as described under Section 4.4 of the PTAR
- Pedestrians facilities were assumed consistent with existing conditions as described under Section 4.2 of the PTAR. This includes data on the presence of sidewalks throughout the corridor.
- Bicycle facilities were assumed consistent with existing conditions as described under Section 4.2 of the PTAR. This includes data on the presence of bicycle lanes throughout the corridor. The existing MGD has no bicycle lanes.
- Transit facilities and operating characteristics were assumed per existing conditions as described under Section 4.3 of the PTAR. This includes data on bus frequencies, load factors and amenities. Data related to these transit operation characteristics are detailed under Appendix D and Appendix F of the PTAR.

ARTPLAN output sheets under Appendix F contain the input data used for the multimodal analyses and detailed output of the LOS estimates. The resulting LOS for pedestrian, bicycle and bus facilities within the study corridor are summarized in Table 4.6. As shown in Table 4.6, under existing (2016) conditions the overall corridor operates at LOS E for bicycles, LOS E for pedestrians and LOS B for buses.

Table 4.6: Existing Conditions – Multimodal LOS Analysis

Segment	2016 Existing		
	Bicycle LOS	Pedestrian LOS	Bus LOS
West of NW 87th Ave	E	F	F
NW 87th Ave - NW 82nd Ave	E	D	F
NW 82nd Ave - NW 79th Ave	E	D	D
NW 79th Ave - W Oakmont Dr	E	D	C
W Oakmont Dr - NW 75th Pl	E	D	D
NW 75th Pl - Bob-O-Link Dr	E	E	A
Bob-O-Link Dr - Ludlam Rd	E	E	A
Ludlam Rd - NW 62nd Ave	E	C	B
NW 62nd Ave - Red Rd	E	D	B
Overall LOS	**E**	**E**	**B**

4.7 Access Management

MGD is classified as an Access Class 3 facility between I-75 and NW 57th Avenue. According to the FDOT Access Management Standards, the following minimum spacing requirements apply for Access Class 3 facilities with 40 MPH speed limit:

- Full Median Opening Spacing – 2,640 feet
- Directional Median Opening – 1,320 feet
- Signal Spacing – 2,640 feet

Currently, there are 28 median openings along this corridor within the study area. Tables 4.7 and 4.8 summarize the existing median opening spacings and signal spacings compared against the standard minimum spacing. As shown in Table 4.7, all of the existing median openings have substandard spacing, and in most cases (24 of 28), the variance is more than 50% below the standard. Similarly, the spacing of existing signals violates the access management standards in 10 of the 11 locations, and the spacing variance exceeds 50% at four signal locations.

Table 4.7: Assessment of Existing Median Opening Spacing

Median Location	Station	Median Opening Type Existing	Spacing of Opening (feet)	Standard Spacing (feet)	Variance (feet)	Variance (%)
NW 87th Ave.	78+75.25	Full (signal)	1980	2640	-660	-25.00
Garden Square Shopping Plaza East Driveway	85+50.00	Full	677	2640	-1963	-74.36
NW 84th Ct. / Mother of our Redeemer Catholic School	90+20.00	Full	470	2640	-2170	-82.20
NW 82nd Ave.	105+13.50	Full (signal)	1494	2640	-1146	-43.41
NW 79th. Ave.	120+80.00	Full (signal)	1566	2640	-1074	-40.68
Fire Station	130+30.00	Full	950	2640	-1690	-64.02
264' east of Fire Station	133+10.00	Full	264	2640	-2376	-90.00
Wentworth Dr.	136+00.00	Full	294	2640	-2346	-88.86
West Oakmont Dr.	139+60.00	Full (signal)	360	2640	-2280	-86.36
NW 75th Pl.	144+60.00	Full (signal)	500	2640	-2140	-81.06
Old Elm Dr.	150+00.00	Full	540	2640	-2100	-79.55
NW 73rd Ave.	154+70.00	Full (signal)	476	2640	-2164	-81.97
Coral Gate Apartments West Driveway	159+80.00	Full	500	2640	-2140	-81.06
320' east of Coral Gate Apartments West Driveway	163+00.00	Full	320	2640	-2320	-87.88
Coral Gate Apartments East Driveway	166+00.00	Full	300	2640	-2340	-88.64
360' east of Coral Gate Apartments East Driveway	169+60.00	Full	360	2640	-2280	-86.36
NW 68th Ave.	174+40.00	Full (signal)	480	2640	-2160	-81.82
Bob-o-link Dr.	185+00.00	Full (signal)	1070	2640	-1570	-59.47
Country Club Plaza Center East Driveway	190+20.00	Full	541	2640	-2099	-79.51
NW 67th Ave.	195+99.50	Full (signal)	551	2640	-2089	-79.13
Sedano's Supermarket East Driveway	203+30.00	Full	748	2640	-1892	-71.67
Mediterranean Villas Driveway	207+80.00	Full	440	2640	-2200	-83.33
540' east of Mediterranean Villas Driveway	213+20.00	Directional (u-turn)	540	2640	-2100	-79.55
NW 62nd Ave.	221+00.00	Full (signal)	780	1320	-540	-40.91
NW 59th Ave.	226+00.00	Directional	500	2640	-2140	-81.06
500' East of NW 59th Ave.	231+00.00	Full	500	1320	-820	-62.12
Red Road/ NW 57th Ave	241+27.85	Full (signal)	1031	2640	-1609	-60.95

Table 4.8: Assessment of Existing Signal Spacing

Median Location	Station	Median Opening Type	Spacing of Opening (feet)	Standard Spacing (feet)	Variance (feet)	Variance (%)
NW 87th Ave.	78+75.25	Full (signal)	2638	2640	-2	-0.08
NW 82nd Ave.	105+13.51	Full (signal)	1567	2640	-1073	-40.64
NW 79th. Ave.	120+80.00	Full (signal)	1880	2640	-760	-28.79
West Oakmont Dr.	139+60.00	Full (signal)	500	2640	-2140	-81.06
NW 75th Pl.	144+60.00	Full (signal)	1010	2640	-1630	-61.74
NW 73rd Ave.	154+70.00	Full (signal)	1970	2640	-670	-25.38
NW 68th Ave.	174+40.00	Full (signal)	1060	2640	-1580	-59.85
Bobolink Dr.	185+00.00	Full (signal)	1100	2640	-1540	-58.33
NW 67th Ave.	195+99.50	Full (signal)	2500	2640	-140	-5.30
NW 62nd Ave.	221+00.00	Full (signal)	2027	2640	-613	-23.22
Red Road/ NW 57th Ave	241+27.85	Full (signal)	2027	2640	-613	-23.22

4.8 Crash Analysis

The FDOT Crash Analysis Reporting System (CARS) was used to gather historical crash records for the MGD corridor. CARS is a database maintained annually by the FDOT for crashes reported along state highway facilities. The database provides information on various characteristics associated with each crash including: collision type, severity, weather conditions, road surface conditions and date/time information. The CARS database was researched to identify and extract crashes reported along the study corridor during the period from January 2012 through December 2016. The crashes were analyzed to make an assessment of safety conditions along the study corridor. Results from this safety analysis are discussed below.

Table 4.9 provides a summary of the crashes reported along the study corridor. The summary table shows that a total of 1,450 crashes were reported along MGD during the five-year period – which equates to an average of 290 crashes per year. These crashes resulted in three fatalities and 502 injury crashes. Rear-end collisions were the most common crash type, accounting for approximately 47.8% of all reported crashes. Angle collisions are the second most common crash type with approximately 18.9% of all crashes and sideswipe collisions are the third most common with 10.6% of all crashes.

Crashes experienced along the corridor were further analyzed to identify any abnormally high crash locations. The analysis was performed using the FDOT's screening tools for high crash spots/segments with rankings based on computed confidence levels for abnormally high crash rates. This screening procedure identifies locations along the study corridor where the historical crash rates are abnormally high when compared to similar locations statewide. Based on this analysis the crashes experienced at the following intersections were determined to be abnormally high:

- NW 67th Avenue: 2013, 2014 and 2016
- NW 62nd Avenue: 2012, 2014 and 2016

Analysis of crash distribution along the corridor also indicate that several crashes are concentrated at the more heavily used intersections, these include, NW 57th Avenue, NW 67th Avenue and NW 87th Avenue.

The high percentage of rear-end and sideswipe collisions along the corridor are typical for roadway conditions where traffic congestion is a probable contributing cause. Excessive congestion is also a probable causal factor for crash concentrations at the more heavily congested intersections (NW 57th Avenue, NW 67th Avenue and NW 87th Avenue). Issues related to inadequate geometry at driveways to gated communities may also be a contributing cause to rear-end collisions. Several gated communities have very short inbound driveway storage areas that can accommodate only one or two vehicles. This limited driveway storage frequently results in vehicles spilling back onto MGD while security guards process drivers to enter the communities.

Angle collisions experienced along MGD may be due in part to inadequate access control, given the large number of median openings with substandard spacing along the corridor. As previously discussed under Section 4.6, the study corridor has 28 existing median openings and all have substandard spacing.

The FDOT estimates that the total economic loss resulting from each crash on an urban arterial with four travel lanes is approximately $123,406 per crash. The annual economic loss resulting from crashes along MGD may therefore be estimated to be approximately $35.8 million per year ($123,406 per crash at 290 crashes per year).

Table 4.9: Corridor Crash Statistics

SR 860 / Miami Gardens Drive from east of I-75 to NW 57 Avenue		Number of Crashes					5 Year Total Crashes	Mean Crashes Per Year	%
		Year							
		2012	2013	2014	2015	2016			
CRASH TYPE	Rear End	103	132	156	142	160	693	139	47.8%
	Head On	1	1	0	0	0	2	0	0.1%
	Angle	37	47	63	65	62	274	55	18.9%
	Left Turn	16	24	31	29	14	114	23	7.9%
	Right Turn	4	4	4	3	5	20	4	1.4%
	Sideswipe	27	27	32	33	34	153	31	10.6%
	Backed Into	0	0	0	0	2	2	0	0.1%
	Pedestrian	5	4	3	3	4	19	4	1.3%
	Bicycle	0	5	3	2	3	13	3	0.9%
	Fixed Object	*11*	*6*	*15*	*16*	*9*	*57*	*11*	*3.9%*
	Other Non Fixed Object Collisions	*0*	*3*	*1*	*6*	*2*	*12*	*2*	*0.8%*
	Non-Collisions	*1*	*1*	*3*	*3*	*1*	*9*	*2*	*0.6%*
	Others	11	19	18	17	17	82	16	5.7%
	Total Crashes	**216**	**273**	**329**	**319**	**313**	**1450**	**290**	**100.0%**
SEVERITY	PDO Crashes	111	172	231	218	213	945	189	65.2%
	Fatal Crashes	1	0	1	1	0	3	1	0.2%
	Injury Crashes	104	101	97	100	100	502	100	34.6%
LIGHTING CONDITIONS	Daylight	141	187	231	206	219	984	197	67.9%
	Dusk	9	9	9	15	6	48	10	3.3%
	Dawn	4	2	6	6	4	22	4	1.5%
	Dark	62	74	83	92	84	395	79	27.2%
	Unknown	0	1	0	0	0	1	0	0.1%
SURFACE CONDITIONS	Dry	176	236	265	281	278	1236	247	85.2%
	Wet	39	36	64	38	34	211	42	14.6%
	Others	1	1	0	0	1	3	1	0.2%
WEATHER CONDITIONS	Clear	162	196	239	251	245	1093	219	75.4%
	Cloudy	30	53	60	46	49	238	48	16.4%
	Rain	24	23	29	22	19	117	23	8.1%
	Fog, Smog, Smoke	0	0	1	0	0	1	0	0.1%
	Sleet/Hail/Freezing Rain	0	0	0	0	0	0	0	0.0%
	Blowing Sand, Soil, Dirt	0	0	0	0	0	0	0	0.0%
	Severe Crosswinds	0	0	0	0	0	0	0	0.0%
	Other	0	1	0	0	0	1	0	0.1%

5.0 No Build Alternative

5.1 No Build Road Network

The future year No Build Alternative network includes the existing (2016) roadway conditions plus all funded and committed projects within the study corridor per the FDOT 5-Year Work Program. It also incorporates all Cost Feasible Plan projects contained in the Transportation Planning Organization's (TPO's) Long Range Transportation Plan (LRTP) that are located outside the immediate project limits. The roadway geometry for the No Build Alternative was determined to be consistent with the geometry for the existing 2016 road network within the project limits. This road network is described in detail under Section 4.2 of the PTAR.

5.2 No Build Traffic Forecast

The development of the travel demand forecast for the No Build Alternative is documented in detail in the ***Project Traffic Forecast Memorandum (PTFM) - SR 860/Miami Gardens Drive from I-75 to SR 823/NW 57th Avenue, Re-evaluation, July 2019***. This memorandum is included under Appendix G. The memorandum contains details of the analytical procedures followed in developing AADTs and peak hour volumes for the existing year 2016, opening year 2020 and design year 2040. The memorandum was processed through the FDOT's electronic review comments process and the information contained therein was found to be acceptable by the FDOT for the purposes of this study. Figures 5.1 and 5.2 depict the resulting 2020 and 2040 traffic forecasts for the No Build Alternative.

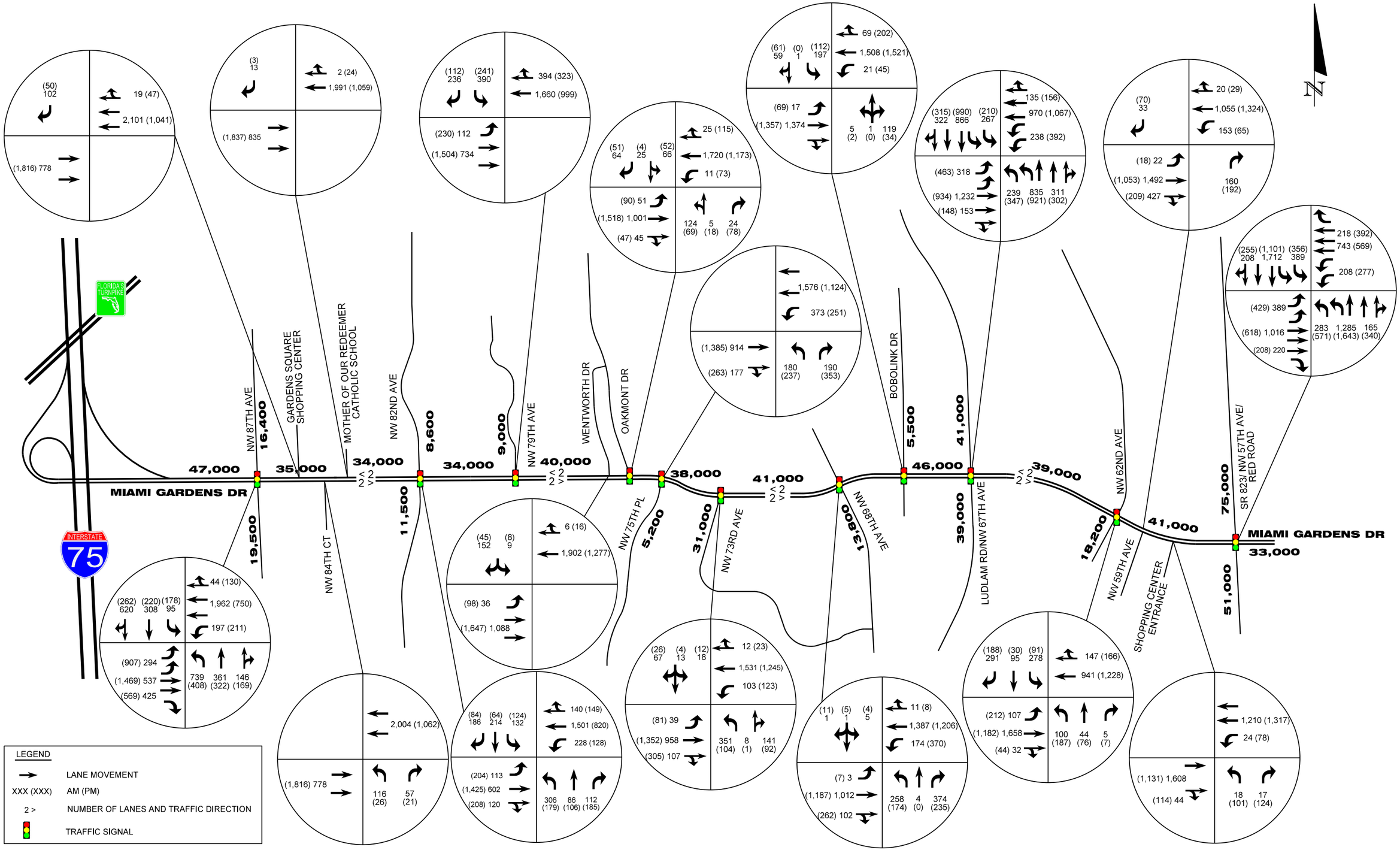

SR 860/Miami Garden Drive Re-evaluation
From east of I-75 to SR 823/NW 57th Avenue

2020 No Build Network and Traffic Volumes

Figure 5-1

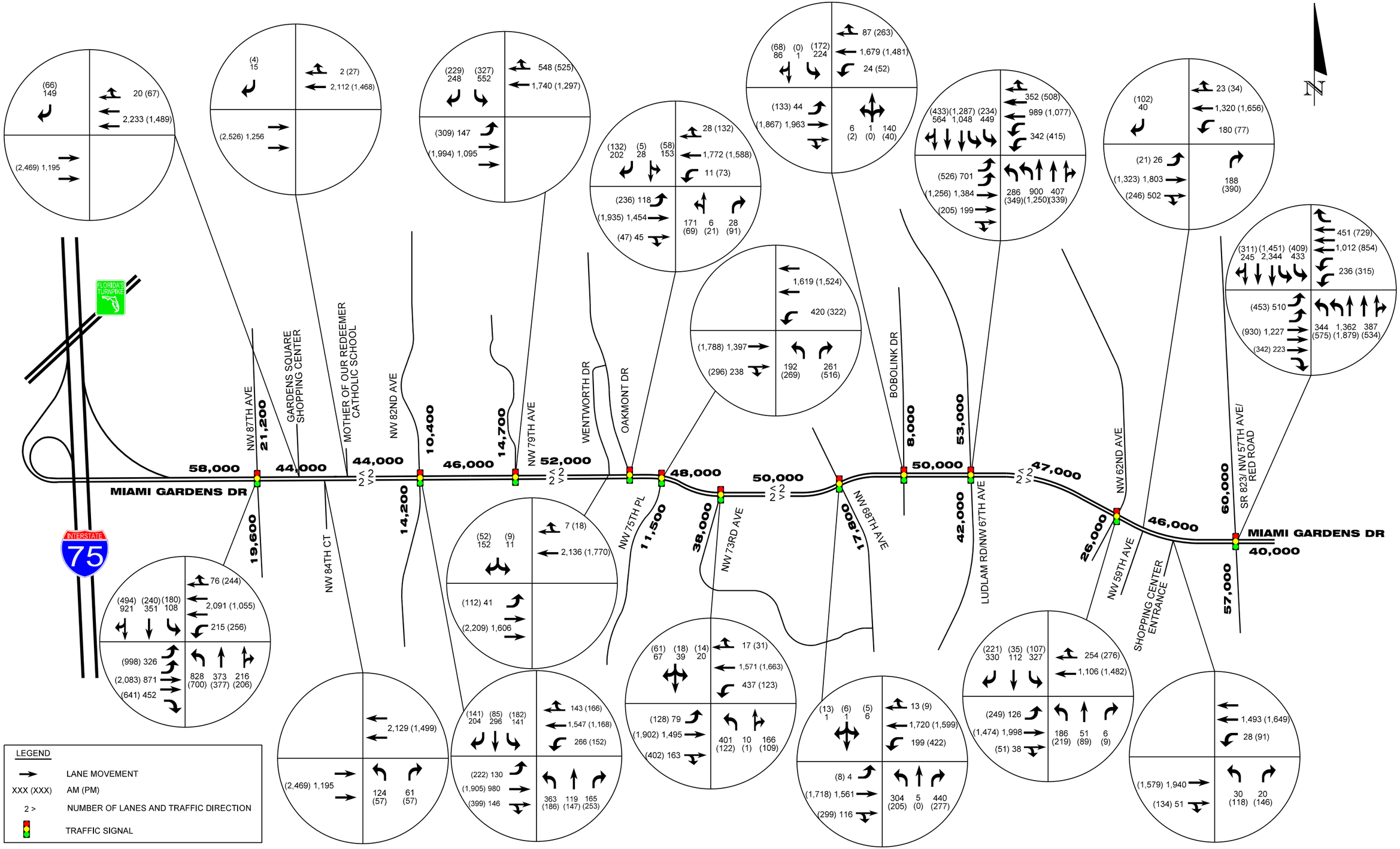

FDOT

SR 860/Miami Garden Drive Re-evaluation
From east of I-75 to SR 823/NW 57th Avenue

2040 No Build Network and Traffic Volumes

Figure 5-2

5.3 No Build Traffic Operations Analysis

Level of Service (LOS) analyses were conducted for the No Build Alternative for the project opening year 2020 and design year 2040. The analyses were conducted in accordance with procedures of the Highway Capacity Manual, 2010 Edition (HCM 2010). Synchro models were developed for performing the level of service analyses of the signalized and unsignalized intersections.

The following were assumed in performing the LOS analyses:

- The road network and intersection configuration for 2020 and 2040 No Build analyses were maintained consistent with the existing year (2016) conditions – per Section 5.1 of PTAR.
- Year 2020 and 2040 volumes used in the analyses are consistent with the traffic forecast presented under Section 5.2 of the PTAR.
- Signal timing plans and cycle lengths were maintained consistent with existing year (2016). Signal splits and phase sequence were optimized, as needed, for improving operations in future year condition.
- Peak hour factors and truck factors are consistent with the existing year (2016) analysis, which is based on data gathered from traffic counts.

Detailed output sheets from the operations analyses are contained under Appendix E. Results are discussed below.

Year 2020 No Build LOS Analysis

The results for year 2020 No Build analyses are summarized in Table 5.1 (signalized intersections) and Table 5.2 (unsignalized intersections). Results from the analyses indicate that substandard (LOS E or LOS F) operating conditions will occur in the AM and/or PM peak periods at four signalized intersections within the study limits. These intersections are: NW 87th Avenue, NW 79th Avenue, NW 67th Avenue (Ludlam Road) and NW 57th Avenue (Red Road). In addition, substandard operating conditions will be experienced on the approaches of five of the six unsignalized intersections. These results suggest that during AM and PM peak periods, excessive delays will continue at several intersections along the corridor in year 2020, under No Build conditions.

Year 2040 No Build LOS Analysis

The results for year 2040 No Build analyses are summarized in Table 5.3 (signalized intersections) and Table 5.4 (unsignalized intersections). The results indicate that substandard (LOS E or LOS F) operating conditions will occur in the AM and/or PM peak periods at nine of the eleven signalized intersections within the study corridor. These signalized intersections include: NW 87th Avenue, NW 82nd Avenue, NW 79th Avenue, W. Oakmont Drive, NW 73rd Avenue, NW 68th Avenue, NW 67th Avenue (Ludlam Road), NW 62nd Avenue and NW 57th Avenue (Red Road). In addition, substandard operating conditions will be experienced on the approaches of five of the six unsignalized intersections. Moreover, the delays at several of the side street approaches are expected to be very excessive – in excess of five minutes. These results suggest that by year 2040 operating conditions along Miami Gardens Drive will further deteriorate to extreme conditions. Very extensive delays will be experienced throughout the corridor and along the side streets.

Table 5.1: No Build LOS – Year 2020, Signalized Intersections

Intersection	Intersection Approach			Overall Intersection	
	App.	Delay (sec)	LOS	Delay (sec)	LOS
		AM (PM)	AM (PM)	AM (PM)	AM Peak
NW 87th Ave	NB	186.9 (104.3)	F (F)	209.9 (93.9)	**F (F)**
	SB	480 (90.8)	F (F)		
	EB	78 (84.6)	E (F)		
	WB	171.3 (111.9)	F (F)		
NW 82nd Ave	NB	86.1 (108.2)	F (F)	35.5 (40.4)	D (D)
	SB	79.9 (68.9)	E (E)		
	EB	33.2 (37.5)	C (D)		
	WB	7.4 (6.5)	A (A)		
NW 79th Ave	SB	80.2 (65)	F (E)	55.8 (22.5)	**E** (C)
	EB	7.2 (4.4)	A (A)		
	WB	69.5 (34.3)	E (C)		
W Oakmont Dr[1]	NB	97.7 (83.8)	F (F)	38.4 (22.5)	D (C)
	SB	90.5 (83.8)	F (F)		
	EB	21.5 (17.3)	C (B)		
	WB	35.6 (15.3)	D (B)		
NW 75th Pl	NB	63 (60)	E (E)	13.6 (30)	B (C)
	EB	13.2 (38.1)	B (D)		
	WB	3.5 (8)	A (A)		
NW 73rd Ave	NB	54.1 (65.1)	D (E)	43.3 (13.9)	D (B)
	SB	30.4 (59.8)	C (E)		
	EB	1.2 (1.9)	A (A)		
	WB	74.6 (19.4)	E (B)		

Notes: (1) Results reported from Synchro 10 HCM2000 report, since HCM2010 reports not capable of reporting results.

Table 5.1 (Continued): No Build LOS – Year 2020 Signalized Intersections

Intersection	Intersection Approach			Overall Intersection	
	App.	Delay (sec)	LOS	Delay (sec)	LOS
		AM (PM)	AM (PM)	AM (PM)	AM (PM)
NW 68th Ave	NB	57.4 (75.9)	E (E)	25.3 (43.1)	C (D)
	SB	36 (52.1)	D (D)		
	EB	29.4 (70)	C (E)		
	WB	7.6 (9.6)	A (A)		
Bob-O-Link Dr	NB	43.1 (61.5)	D (E)	21.9 (10.8)	C (B)
	SB	52.5 (66.9)	D (E)		
	EB	2.9 (1.2)	A (A)		
	WB	32.2 (10.8)	C (B)		
Ludlam Rd / NW 67th Ave	NB	65.8 (53.7)	E (D)	67.2 (61.7)	**E (E)**
	SB	63.6 (57.3)	E (E)		
	EB	72.9 (61.3)	E (E)		
	WB	65.1 (73.7)	E (E)		
NW 62nd Ave	NB	84.6 (72.7)	F (E)	36.8 (33)	D (C)
	SB	69.7 (68.9)	E (E)		
	EB	27.1 (19.5)	C (B)		
	WB	25.7 (30.3)	C (C)		
Red Rd / NW 57th Ave	NB	56 (64.3)	E (E)	64.6 (71.5)	**E (E)**
	SB	66.3 (63.4)	E (E)		
	EB	66.9 (85)	E (F)		
	WB	72.1 (84.1)	E (F)		

Notes: (1) Results reported from Synchro 10 HCM2000 report, since HCM2010 reports not capable of reporting results.

Table 5.2: No Build LOS – Year 2020, Unsignalized Intersections

Intersection	Lane Group	Delay (sec)		LOS	
		AM Peak	PM Peak	AM Peak	PM Peak
Shopping Center Entrance (East)	EB	0	0	A	A
	WB	0	0	A	A
	SB	63.60	15.9	**F**	C
NW 84th Ct	EB	0	0	A	A
	WB	0	0	A	A
	NB	468.2	311.9	**F**	**F**
Catholic School	EB	0	0	A	A
	WB	0	0	A	A
	SB	23.1	13	C	B
Wentworth Dr.	EB	0.7	0.8	A	A
	WB	0	0	A	A
	SB	296.1	90.9	**F**	**F**
NW 59th Ave	EB	0.1	0.2	A	A
	WB	5	0.6	A	A
	NB	59.7	24.4	**F**	C
	SB	13.6	17.6	B	C
Shopping Center Entrance (West)	EB	0	0	A	A
	WB	0.3	0.8	A	A
	NB	215.2	617.3	**F**	**F**

Table 5.3: No Build LOS – Year 2040, Signalized Intersections

Intersection	Intersection Approach			Overall Intersection	
	App.	Delay (sec)	LOS	Delay (sec)	LOS
		AM (PM)	AM (PM)	AM (PM)	AM Peak
NW 87th Ave	NB	256.5 (225.4)	F (F)	304.5 (258.8)	**F (F)**
	SB	637.4 (594.9)	F (F)		
	EB	113 (252.3)	F (F)		
	WB	271.4 (113.8)	F (F)		
NW 82nd Ave	NB	102.7 (179.5)	F (F)	57.7 (73.6)	**E (E)**
	SB	105.5 (103.5)	F (F)		
	EB	74.6 (83.4)	E (F)		
	WB	13 (2.9)	B (A)		
NW 79th Ave	SB	115.1 (75.1)	F (E)	103.4 (36.6)	**F** (D)
	EB	3.6 (5.5)	A (A)		
	WB	155.1 (63.3)	F (E)		
W Oakmont Dr[1]	NB	131.8 (91.6)	F (F)	81.1 (36.3)	**F** (D)
	SB	119.1 (86.5)	F (F)		
	EB	51.5 (29.6)	D (C)		
	WB	88.8 (32.6)	F (C)		
NW 75th Pl	NB	50.5 (64.8)	D (E)	35.2 (43.3)	D (D)
	EB	52.6 (68.8)	D (E)		
	WB	15.6 (7.1)	B (A)		
NW 73rd Ave	NB	181.9 (63.5)	F (E)	160.4 (34.6)	**F** (C)
	SB	38.8 (57.2)	D (E)		
	EB	228.4 (27.5)	F (C)		
	WB	92.4 (38.7)	F (D)		

Table 5.3 (Continued): No Build LOS – Year 2040 Signalized Intersections

Intersection	Intersection Approach			Overall Intersection	
	App.	Delay (sec)	LOS	Delay (sec)	LOS
		AM (PM)	AM (PM)	AM (PM)	AM (PM)
NW 68th Ave	NB	128.9 (79.1)	F (E)	33.6 (67.2)	C (**E**)
	SB	42.7 (49.1)	D (D)		
	EB	19.1 (125.5)	B (F)		
	WB	6.8 (6.3)	A (A)		
Bob-O-Link Dr	NB	50 (53.8)	D (D)	27.4 (20.6)	C (C)
	SB	72.9 (64.9)	E (E)		
	EB	15.2 (3.4)	B (A)		
	WB	31.4 (31.8)	C (C)		
Ludlam Rd / NW 67th Ave	NB	41.7 (82.8)	D (F)	75.7 (105.1)	**E (F)**
	SB	41.2 (90.8)	D (F)		
	EB	90 (106.7)	F (F)		
	WB	132 (138.3)	F (F)		
NW 62nd Ave	NB	83.5 (213)	F (F)	63.1 (36.8)	**E** (D)
	SB	166.2 (215.6)	F (F)		
	EB	43.9 (0.7)	D (A)		
	WB	31.7 (0.9)	C (A)		
Red Rd / NW 57th Ave	NB	10.5 (132.8)	B (F)	101.1 (130.8)	**F (F)**
	SB	123.3 (64.5)	F (E)		
	EB	124.8 (137.6)	F (F)		
	WB	159.5 (199.1)	F (F)		

Table 5.4: No Build LOS – Year 2040, Unsignalized Intersections

Intersection	Lane Group	Delay (sec)		LOS	
		AM Peak	PM Peak	AM Peak	PM Peak
Shopping Center Entrance (East)	EB	0	0	A	A
	WB	0	0	A	A
	SB	167.9	23.8	**F**	C
NW 84th Ct	EB	0	0	A	A
	WB	0	0	A	A
	NB	*	*	*	*
Catholic School	EB	0	0	A	A
	WB	0	0	A	A
	SB	25.5	16.3	D	C
Wentworth Dr.	EB	0.7	1.2	A	A
	WB	0	0	A	A
	SB	*	*	*	*
NW 59th Ave	EB	0.1	0.2	A	A
	WB	17.7	0.8	A	A
	NB	209.5	233.4	**F**	**F**
	SB	16.2	26.9	C	D
Shopping Center Entrance (West)	EB	0	0	A	A
	WB	0.4	1.1	A	A
	NB	*	*	*	*

* = Delay so excessive that it cannot be measured

5.4 No Build Alternative Multimodal Analysis

Level of service analysis for multimodal facilities (pedestrian, bicycle and bus facilities) were computed for 2040 No Build conditions. The analyses were performed using the FDOT's multimodal conceptual planning tool ARTPLAN. The following were assumed for the analyses:

- The 2040 No Build roadway network was assumed to match existing as discussed under Section 5.1 of the PTAR.
- The 2040 No Build Traffic volumes were assumed as described under Section 5.2 of the PTAR
- Pedestrians facilities were assumed consistent with existing conditions. This includes data on the presence of sidewalks throughout the corridor.
- Bicycle facilities were assumed consistent with existing conditions. This includes data on the presence of bicycle lanes throughout the corridor. The existing MGD has no bicycle lanes.
- Transit facilities and operating characteristics were assumed per existing conditions. This includes data on bus frequencies, load factors and amenities. Data related to these transit operation characteristics are detailed under Appendix D and Appendix F of the PTAR.

ARTPLAN output sheets under Appendix F contain the input data used for the multimodal analyses and detailed output of the LOS estimates. The resulting LOS for pedestrian, bicycle and bus facilities within the study corridor are summarized in Table 5.5. As shown in Table 5.5, under 2040 No Build conditions the overall corridor is expected to operate at LOS E for bicycles, LOS E for pedestrians and LOS B for buses.

Table 5.5: No Build LOS – Year 2040, Multimodal LOS Analysis

Segment	2040 No Build		
	Bicycle LOS	Pedestrian LOS	Bus LOS
West of NW 87th Ave	F	F	F
NW 87th Ave - NW 82nd Ave	E	E	F
NW 82nd Ave - NW 79th Ave	E	E	D
NW 79th Ave - W Oakmont Dr	F	F	E
W Oakmont Dr - NW 75th Pl	E	E	C
NW 75th Pl - Bob-O-Link Dr	F	E	A
Bob-O-Link Dr - Ludlam Rd	E	F	B
Ludlam Rd - NW 62nd Ave	E	C	B
NW 62nd Ave - Red Rd	E	E	B
Overall LOS	**E**	**E**	**B**

6.0 Build Alternative

6.1 Build Alternative Road Network

TYPICAL SECTION

Typical sections for the Build Alternative are graphically depicted under Appendix C. The MGD typical section for Build Alternative consists of an urban normal crown section with six 11-foot lanes (3 in each direction). A landscaped, raised median is included that varies from 4.0 feet to 23.88 feet wide, as well as bicycle lanes in both directions of travel that are 4.75 feet to 6.25 feet wide. Within the 110-foot right-of-way (Peters Pike Canal to NW 57th Avenue) there will be a utility strip approximately 5 feet wide on the north side of the roadway to minimize impacts to the existing electric transmission poles. An exception to this will be near the NW 67th Avenue and NW 57th Avenue intersections where the existing transmission utility poles are located outside of the MGD right-of-way.

On the north and south sides of MGD, a 6-foot wide sidewalk is present along the entire corridor. The sidewalk abuts the north and south right-of-way lines within the 105-foot right-of-way (NW 87th Avenue to Peters Pike Canal). All major side streets within the project's limits have north-south sidewalks that connect to the MGD east-west sidewalk/pedestrian network. In addition, crosswalks are provided at signalized intersections.

INTERSECTIONS

Figures 6.1 and 6.2 (under Section 6.2) depict the intersection lane configurations for the Build Alternative. As highlighted in these figures, the Build Alternative incorporates local widening at select intersections to provide additional turn lanes (over and above the existing) for increasing intersection capacity. These locations include the intersections at NW 87th Avenue, NW 73rd Avenue, NW 67th Avenue and NW 57th Avenue. These intersections were selected for further capacity improvements based on preliminary results from level of service analyses. Widening at these intersections was incorporated to the maximum reasonable extent given the need to limit right-of-way impacts and potential business damages.

It should also be noted that in the case of NW 87th Avenue, alternative intersection configurations were considered. These alternative intersection configurations were subsequently discarded due to geometric, ROW and safety considerations, as noted below.

- Median U-Turn (MUT): The MUT Intersection requires introducing additional intersections on MGD to the east and west of NW 87th Avenue in order to accommodate U-Turn movements. Introducing an additional intersection to the west of NW 87th Avenue is undesirable from a safety and operational perspective due to the close proximity (approximately 1,800 feet) of the I-75 interchange. A MUT intersection was therefore discarded as an alternative intersection configuration. A partial MUT intersection was also discarded for similar considerations.
- Quadrant Roadway: The northeast, northwest and southeast quadrants of the intersection are built-out with existing commercial and residential properties. A quadrant roadway was discarded for these locations due the extensive ROW required. The southwest quadrant of the intersection is currently a vacant property. However, a quadrant roadway in this location would introduce a new intersection west of NW 87th Avenue, in close proximity to the I-75 Interchange. Hence, a quadrant roadway was discarded for the southwest location due to safety and operational concerns.
- Displaced Left-Turn Intersection: This intersection configuration requires substantial ROW in all four quadrants of the intersection. This configuration was discarded due to extensive ROW needs.
- Roundabout: A multilane (3+ lanes) roundabout would be required to accommodate traffic demand at MDG/NW 87th Avenue intersection. This intersection configuration was discarded due to the extensive ROW needed to accommodate such a multilane roundabout.

ACCESS MANAGEMENT

The Build Alternative will modify and/or eliminate several existing median openings along MGD. The proposed median opening modifications will improve compliance (spacing between openings) with the FDOT's access management standards. In addition, the proposed median modifications will improve safety as potential traffic conflict points will be reduced at the median openings. Table 6.1 shows the proposed median opening modifications. These median opening modifications are reflected in the Build Alternative Concept plan under Appendix H.

Table 6.1 Build Alternative – Proposed Median Opening Modifications

Median Location	Station	Median Opening Type Existing/No Build	Median Opening Type Build Alternative
Garden Square Shopping Plaza East Driveway	85+50.00	Full	Closed
264' east of Fire Station	133+10.00	Full	Closed
Wentworth Dr.	136+00.00	Full	Closed
Old Elm Dr.	150+00.00	Full	Closed
Coral Gate Apartments West Driveway	159+80.00	Full	Closed
320' east of Coral Gate Apartments West Driveway	163+00.00	Full	Closed
Coral Gate Apartments East Driveway	166+00.00	Full	Directional
360' east of Coral Gate Apartments East Driveway	169+60.00	Full	Closed
Country Club Plaza Center East Driveway	190+20.00	Full	Closed
540' east of Mediterranean Villas Driveway	213+20.00	Directional (U-turns)	Closed

6.2 Build Alternative Traffic Forecast

The development of the travel demand forecast for the Build Alternative is documented in detail in the ***Project Traffic Forecast Memorandum (PTFM) - SR 860/ Miami Gardens Drive from I-75 to SR 823/NW 57th Avenue, Re-evaluation, July 2019***. This memorandum is included under Appendix G. The memorandum contains details of the analytical procedures followed in developing AADTs and peak hour volumes for the existing year 2016, opening year 2020 and design year 2040. The memorandum was processed through the FDOT's electronic review comments system and the information contained therein was found to be acceptable by the FDOT for the purposes of this study. Figures 6.1 and 6.2 depict the 2020 and 2040 traffic forecasts for the Build Alternative.

The traffic forecast for the Build Alternative incorporates the following notable future projects within the vicinity of the study area:

- Western extension of MGD to access properties located west of I-75.
- Construction of American Dream Miami (ADM) and the Graham Properties projects. These planned developments are located west of I-75 and will be accessible via MGD.
- Construction of new interchange at Homestead Extension of Florida Turnpike (HEFT) and NW 170th Street.
- Opening of overpass bridge at NW 170th Street and I-75. This overpass will provide connectivity (via NW 170th Street) for properties located to the east and west of I-75 and serves as a local reliever route for MGD.

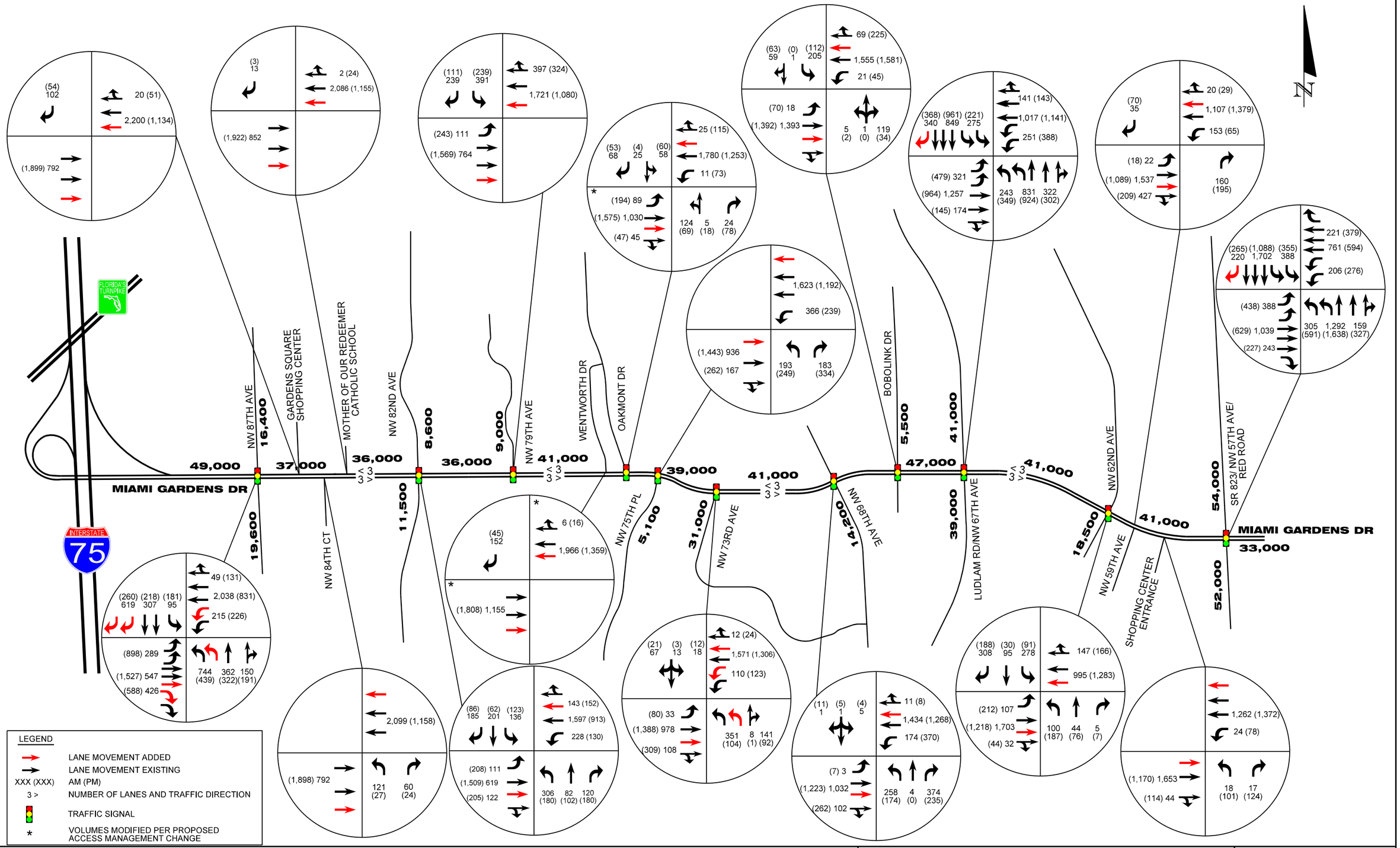

FDOT

SR 860/Miami Garden Drive Re-evaluation
From east of I-75 to SR 823/NW 57th Avenue

2020 Build Network and Traffic Volumes

Figure 6-1

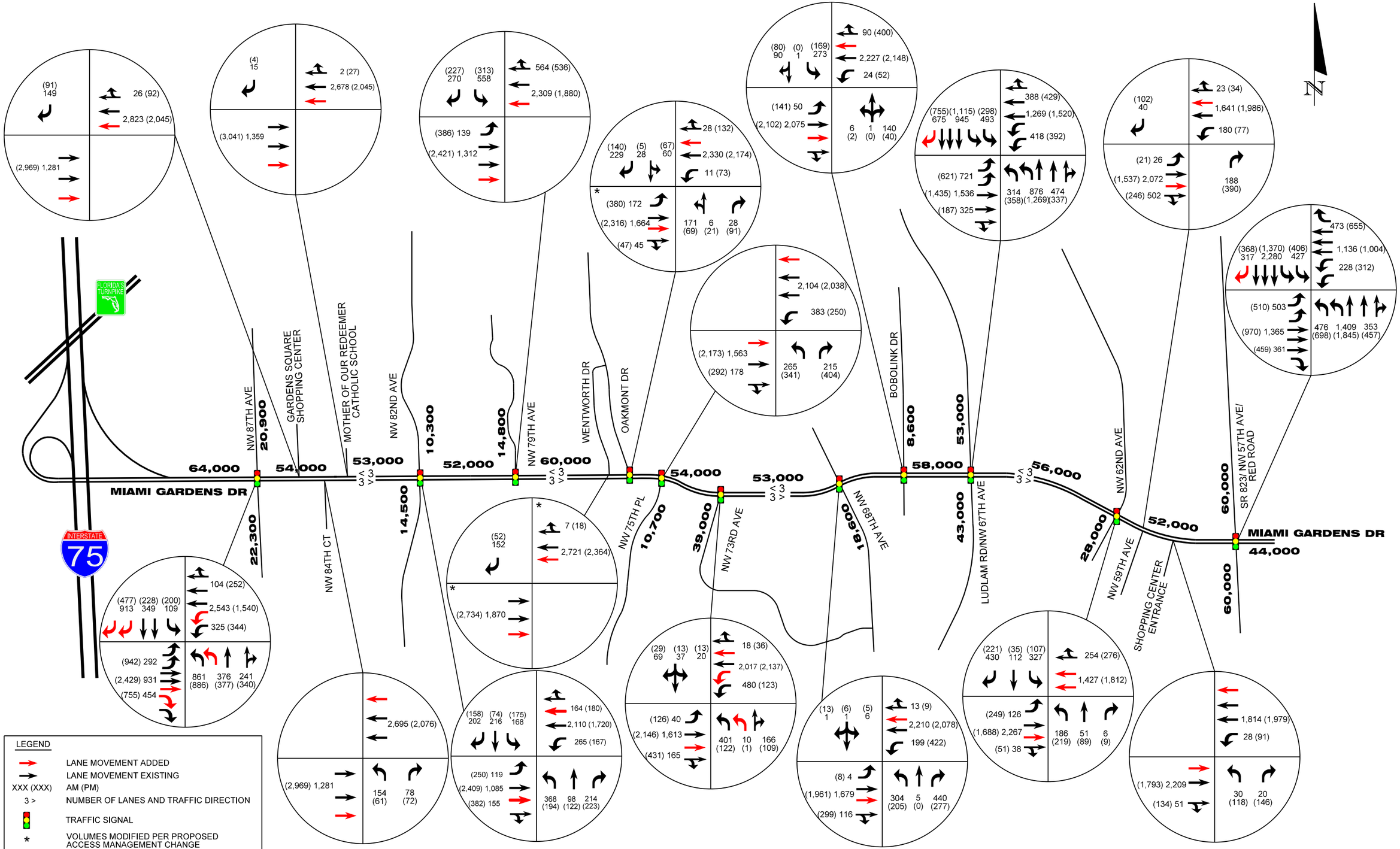

FDOT

SR 860/Miami Garden Drive Re-evaluation
From east of I-75 to SR 823/NW 57th Avenue

2040 Build Network and Traffic Volumes

Figure 6-2

6.3 Build Alternative Operations Analysis

LOS ANALYSIS METHODOLOGY

Level of Service (LOS) analyses were conducted for the Build Alternative for the project horizon years 2020 and 2040. The analyses for the Build Alternative were conducted in accordance with procedures of the Highway Capacity Manual, 2010 Edition (HCM 2010). Synchro models were developed for performing the level of service analyses of the signalized and unsignalized intersections. The following were assumed in performing the LOS analyses:

- The 2020 and 2040 road network assumed widening of MGD to include six lanes (3 EB + 3 WB) plus additional turn lanes at intersections per geometry under Section 6.1 of the PTAR.
- Year 2020 and 2040 volumes used in the Build analyses are consistent with the traffic forecast presented under Section 6.2 of the PTAR.
- Signal phasing and cycle lengths were maintained consistent with existing year (2016). Signal splits and phase sequence were optimized, as needed, for improving traffic operations.
- Peak hour factors and truck factors are consistent with the No Build analysis.

Detailed output sheets from the operations analyses are contained under Appendix E. Results are discussed below.

Year 2020 Build Alternative LOS Analysis

The results for year 2020 Build analyses are summarized in Table 6.2 (signalized intersections) and Table 6.3 (unsignalized intersections). The results of the analyses indicate that the following 3 signalized intersections will experience substandard (LOS E or LOS F) operating conditions by year 2020:

- MGD at NW 87th Avenue – LOS E in AM peak
- MGD at NW 67th Avenue – LOS E/E in AM/PM peaks
- MGD at NW 57th Avenue/Red Road – LOS E/E in AM/PM peaks

The above results show an improvement in traffic operations under the Build Alternative when compared to 2020 No Build condition in which four signalized intersections (including the above two) operate under substandard conditions (see results under Section 5.3 of PTAR).

Further, under the 2020 No Build Alternative, the most critical intersection at NW 87th Avenue operates at LOS F/F in AM/PM peak whereas in the Build Alternative, this intersection operates at LOS E/D in the AM/PM peak.

In the Build Alternative, substandard operating conditions (LOS E or LOS F) will be experienced on the minor street approaches (stop sign controlled) at five of the six unsignalized intersections. Similar substandard operations will occur at these unsignalized intersections under the No Build condition. Traffic operating conditions at these unsignalized intersections are similar in the No Build and Build conditions, as no capacity improvements are proposed on the side street approaches at the unsignalized intersections. Long delays will therefore be experienced on these unsignalized side street approaches in both Build and No Build condition.

Year 2040 Build Alternative LOS Analysis

The results for year 2040 Build analyses are summarized in Table 6.4 (signalized intersections) and Table 6.5 (unsignalized intersections). The results of the analyses indicate that the following six signalized intersections will experience substandard (LOS E or LOS F) operating conditions by year 2040:

- MGD at NW 87th Avenue – LOS F/F in AM/PM peaks
- MGD at NW 79th Avenue – LOS E AM peak
- MGD at West Oakmont Drive – LOS E/E in AM/PM peaks
- MGD at NW 67th Avenue – LOS F/F in AM/PM peaks
- MGD at NW 62nd Avenue – LOS E in AM peak
- MGD at NW 57th Avenue/Red Road – LOS F/F in AM/PM peaks

The above results show an improvement in traffic operations under the Build Alternative when compared to 2040 No Build condition in which nine signalized intersections (including the above six) operate under substandard conditions (see results under Section 5.3 of PTAR). Further, under the 2040 No Build Alternative, failing conditions (LOS F) are experienced at six intersections whereas in the Build condition such failing conditions are experienced at three intersections and delays are shorter. It is noted that further capacity improvements

were not achievable at the three failing signalized intersections without substantial right-of-way takes and business damages.

In the 2040 Build Alternative, substandard operating conditions (LOS E or LOS F) will be experienced on the minor street approaches (stop sign controlled) at five of the six unsignalized intersections. Similar substandard operations will occur at these unsignalized intersections under the 2040 No Build condition. Traffic operating conditions at these unsignalized intersections are similar in the No Build and Build conditions, as no capacity improvements are proposed on the side street approaches at the unsignalized intersections.

Table 6.2: Build LOS – Year 2020, Signalized Intersections

Intersection	Intersection Approach			Overall Intersection	
	App.	Delay (sec)	LOS	Delay (sec)	LOS
		AM (PM)	AM (PM)	AM (PM)	AM Peak
NW 87th Ave	NB	65.7 (79.3)	E (E)	58 (54.2)	**E** (D)
	SB	83.8 (47.1)	F (D)		
	EB	33.5 (39)	C (D)		
	WB	55.7 (77.6)	E (E)		
NW 82nd Ave	NB	59.6 (81.2)	E (F)	26.6 (44.5)	C (D)
	SB	72.1 (69.2)	E (E)		
	EB	26.8 (34.8)	C (C)		
	WB	3.9 (38.1)	A (D)		
NW 79th Ave	SB	59.5 (59.4)	E (E)	34.4 (21.3)	C (C)
	EB	6.5 (2.7)	A (A)		
	WB	39.3 (37)	D (D)		
W Oakmont Dr[1]	NB	80.7 (83.8)	F (F)	31.5 (29)	C (C)
	SB	76.9 (83.9)	E (F)		
	EB	18.9 (20.8)	B (C)		
	WB	28.5 (24.8)	C (C)		
NW 75th Pl	NB	46.1 (51.8)	D (D)	20.1 (28.1)	C (C)
	EB	40 (37.1)	D (D)		
	WB	2.1 (5.2)	A (A)		
NW 73rd Ave	NB	53.9 (69.8)	D (E)	23 (19.1)	C (B)
	SB	45 (66.4)	D (E)		
	EB	1.5 (1.3)	A (A)		
	WB	27.4 (35.5)	C (D)		

Table 6.2 (Continued): Build LOS – Year 2020 Signalized Intersections

Intersection	Intersection Approach			Overall Intersection	
	App.	Delay (sec)	LOS	Delay (sec)	LOS
		AM (PM)	AM (PM)	AM (PM)	AM (PM)
NW 68th Ave	NB	45.3 (65.8)	D (E)	26 (39.5)	C (D)
	SB	30.7 (48.1)	C (D)		
	EB	41.6 (63.5)	D (E)		
	WB	5.5 (8.3)	A (A)		
Bob-O-Link Dr	NB	34.5 (48.5)	C (D)	17.6 (14.6)	B (B)
	SB	40.7 (52.1)	D (D)		
	EB	1.2 (2.1)	A (A)		
	WB	27 (20.4)	C (C)		
Ludlam Rd / NW 67th Ave	NB	64.5 (58.4)	E (E)	62.1 (62.3)	**E (E)**
	SB	48.9 (45.6)	D (D)		
	EB	70.3 (66.2)	E (E)		
	WB	63.1 (78.2)	E (E)		
NW 62nd Ave	NB	75.5 (70.6)	E (E)	30 (28.7)	C (C)
	SB	55.2 (65.7)	E (E)		
	EB	20.4 (15.9)	C (B)		
	WB	23.9 (25.1)	C (C)		
Red Rd / NW 57th Ave	NB	57.7 (74.6)	E (E)	57 (78.3)	**E (E)**
	SB	46.4 (57)	D (E)		
	EB	64.7 (89.2)	E (F)		
	WB	64.2 (101.5)	E (F)		

Notes: (1) Results reported from Synchro 10 HCM2000 report, since HCM2010 reports not capable of reporting results.

Table 6.3: Build LOS – Year 2020, Unsignalized Intersections

Intersection	Lane Group	Delay		LOS	
		AM Peak	PM Peak	AM Peak	PM Peak
Shopping Center Entrance (East)	EB	0.00	0.00	A	A
	WB	0.00	0.00	A	A
	SB	76.10	17.10	**F**	C
NW 84th Ct	EB	0.00	0.00	A	A
	WB	0.00	0.00	A	A
	NB	115.60	103.50	**F**	**F**
Catholic School	EB	0.00	0.00	A	A
	WB	0.00	0.00	A	A
	SB	28.40	15.10	D	C
Wentworth Dr.	EB	0.00	0.00	A	A
	WB	0.00	0.00	A	A
	SB	90.70	19.00	**F**	C
NW 59th Ave	EB	0.20	0.30	A	A
	WB	43.20	1.10	A	A
	NB	99.60	34.90	**F**	D
	SB	15.70	21.30	C	C
Shopping Center Entrance (West)	EB	0.00	0.00	A	A
	WB	0.60	1.40	A	A
	NB	80.60	293.30	**F**	**F**

* = Delay excessive that cannot be measured

Table 6.4: Build LOS – Year 2040, Signalized Intersections

Intersection	Intersection Approach			Overall Intersection	
	App.	Delay (sec)	LOS	Delay (sec)	LOS
		AM (PM)	AM (PM)	AM (PM)	AM Peak
NW 87th Ave	NB	181.5 (203.1)	F (F)	132.1 (110.1)	**F (F)**
	SB	141.5 (120.9)	F (F)		
	EB	57.9 (70.9)	E (E)		
	WB	145.7 (112.1)	F (F)		
NW 82nd Ave	NB	70.4 (146)	E (F)	43.6 (53.7)	D (D)
	SB	76.9 (108.3)	E (F)		
	EB	53.4 (60.3)	D (E)		
	WB	21.9 (5.2)	C (A)		
NW 79th Ave	SB	93.4 (79.4)	F (E)	69.5 (36.4)	**E** (D)
	EB	3.2 (4.4)	A (A)		
	WB	97.3 (65.7)	F (E)		
W Oakmont Dr[1]	NB	131.8 (119.7)	F (F)	69 (57.3)	**E (E)**
	SB	122.1 (125.1)	F (F)		
	EB	39.3 (37.3)	D (D)		
	WB	75.6 (66)	E (E)		
NW 75th Pl	NB	59.2 (64.6)	E (E)	25.8 (33.9)	C (C)
	EB	42.3 (48.3)	D (D)		
	WB	5.5 (5.3)	A (A)		
NW 73rd Ave	NB	66.3 (67.1)	E (E)	21.8 (21.5)	C (C)
	SB	45.1 (63.4)	D (E)		
	EB	2.9 (4.3)	A (A)		
	WB	24.3 (39.2)	C (D)		

Notes: (1) Results reported from Synchro 10 HCM2000 report, since HCM2010 reports not capable of reporting results.

Table 6.4 (Continued): Build LOS – Year 2040 Signalized Intersections

Intersection	Intersection Approach			Overall Intersection	
	App.	Delay (sec)	LOS	Delay (sec)	LOS
		AM (PM)	AM (PM)	AM (PM)	AM (PM)
NW 68th Ave	NB	73.1 (80.9)	E (F)	19.2 (50.6)	B (D)
	SB	36.1 (49.4)	D (D)		
	EB	12.4 (77.4)	B (E)		
	WB	6.3 (17.6)	A (B)		
Bob-O-Link Dr	NB	38.4 (51.5)	D (D)	26 (22.2)	C (C)
	SB	54 (60.3)	D (E)		
	EB	4.9 (5.2)	A (A)		
	WB	40.6 (33.2)	D (C)		
Ludlam Rd / NW 67th Ave	NB	40.9 (119.8)	D (F)	104.8 (136.7)	**F (F)**
	SB	66.5 (109.6)	E (F)		
	EB	126.1 (152.9)	F (F)		
	WB	169.4 (160.8)	F (F)		
NW 62nd Ave	NB	82.3 (98.1)	F (F)	67.4 (39.5)	**E** (D)
	SB	265.7 (57.2)	F (E)		
	EB	23.9 (23.5)	C (C)		
	WB	26.6 (41.8)	C (D)		
Red Rd / NW 57th Ave	NB	12.2 (131.4)	B (F)	103.4 (135.9)	**F (F)**
	SB	138.8 (73.4)	F (E)		
	EB	110.7 (128.1)	F (F)		
	WB	161.5 (210.7)	F (F)		

Notes: (1) Results reported from Synchro 10 HCM2000 report, since HCM2010 reports not capable of reporting results.

Table 6.5: Build LOS – Year 2040, Unsignalized Intersections

Intersection	Lane Group	Delay		LOS	
		AM Peak	PM Peak	AM Peak	PM Peak
Shopping Center Entrance (East)	EB	0	0	A	A
	WB	0	0	A	A
	SB	498.9	57	F	F
NW 84th Ct	EB	0	0	A	A
	WB	0	0	A	A
	NB	*	*	*	*
Catholic School	EB	0	0	A	A
	WB	0	0	A	A
	SB	46.9	26.6	E	D
Wentworth Dr.	EB	0	0	A	A
	WB	0	0	A	A
	SB	*	51.9	*	F
NW 59th Ave	EB	0.3	0.6	A	A
	WB	152	2.5	A	A
	NB	*	*	*	*
	SB	23.3	53.8	C	F
Shopping Center Entrance (West)	EB	0	0	A	A
	WB	1.3	5.6	A	A
	NB	*	*	*	*

* = Delay so excessive that it cannot be measured

6.4 Build Alternative Multimodal Analysis

Level of service analysis for multimodal facilities (pedestrian, bicycle and bus facilities) were computed for 2040 Build Alternative. The analyses were performed using the FDOT's multimodal conceptual planning tool ARTPLAN. The following were assumed for the analyses:

- The 2040 Build roadway network was assumed as described under Section 6.1 of the PTAR.
- The 2040 Build Traffic volumes were assumed as described under Section 6.2 of the PTAR
- Pedestrians facilities were assumed consistent Build Alternative as described under Section 6.1 of the PTAR. This includes data on the location of sidewalks throughout the corridor.
- Bicycle facilities were assumed consistent with Build Alternative as described under Section 6.1 of the PTAR. This includes data on the location of bicycle lanes throughout the corridor. The Build Alternative includes bicycle lanes throughout the length of the corridor.
- Transit facilities and operating characteristics were assumed to match existing conditions with the exception that all bus stops will be upgraded to include a shelter and a bench. This assumption was considered reasonable as there are no significant transit improvements proposed under the MGD Re-evaluation. Data related to transit operation characteristics (bus frequencies and load factors) are included under Appendix D and Appendix F of the PTAR.

ARTPLAN output sheets under Appendix F contain the input data used for the multimodal analyses and detailed output of the LOS estimates. The resulting LOS for pedestrian, bicycle and bus facilities within the study corridor are summarized in Table 6.6. As shown in Table 6.6 under 2040 Build Alternative the overall corridor is expected to operate at LOS C for bicycles, LOS D for pedestrians and LOS B for buses. Bicycle operations are better under the Build Alternative (LOS C) when compared to the No Build Alternative (LOS E). This improvement results largely from the presence of bicycle lanes in the Build Alternative whereas no bicycle lanes are present in the No Build Alternative. Pedestrian operations are

also better in the Build Alternative (LOS D) when compared to the No Build Alternative (LOS E). This improvement in pedestrian LOS is due to the widening of the roadway which results in a reduction in the number of vehicles using the lane adjacent to the sidewalk. This reduction in vehicles adjacent to the sidewalk improves the level of service for pedestrian activities. Bus operations under the Build Alternative (LOS B) are similar to bus operations under the No Build Alternative (LOS B). Bus operations are similar under both Build and No Build conditions as no significant transit improvements are proposed under the MGD Re-evaluation.

Table 6.6: 2040 Build Alternative Multimodal LOS Analysis

Segment	2040 Build Alternative		
	Bicycle LOS	Pedestrian LOS	Bus LOS
West of NW 87th Ave	C	E	F
NW 87th Ave - NW 82nd Ave	C	D	F
NW 82nd Ave - NW 79th Ave	C	D	D
NW 79th Ave - W Oakmont Dr	C	E	D
W Oakmont Dr - NW 75th Pl	C	D	C
NW 75th Pl - Bob-O-Link Dr	C	D	A
Bob-O-Link Dr - Ludlam Rd	C	D	A
Ludlam Rd - NW 62nd Ave	B	C	B
NW 62nd Ave - Red Rd	C	D	B
Overall LOS	**C**	**D**	**B**

6.5 Build Alternative Safety Analysis

A safety analysis was performed to estimate the potential crash reductions resulting from the proposed improvements in the Build Alternative. The analysis was performed by reviewing historical crash records and applying applicable crash modification factors (CMFs) associated with the proposed improvements. CMFs were identified for the following Build Alternative improvements using the FHWA's Crash Modification Factors Clearinghouse:

- Widening from 4 to 6 lanes, CMF = 0.85 applicable for all crashes (CMF ID: 4656). This CMF indicates that a 15% reduction in crashes is expected with widening roadway from 4 lanes to 6 lanes.
- Installation of bicycle lanes, CMF = 0.944 applicable for all crashes (CMF ID: 7924). This CMF indicates that a crash reduction of approximately 5.6% is expected with the introduction of bicycle lanes.

Based on the Highway Safety Manual procedures for combining multiple crash modification factors, it is estimated that the combined effect of widening MGD and adding bicycle lanes will result in a CMF of approximately 0.80 [0.85 * 0.944]. Historical crash data for the study corridor indicate that the existing corridor experiences approximately 290 crashes per year (reference Section 4.8 of PTAR). Hence, following the implementation of the Build Alternative, the annual number of crashes occurring within the study segment can be estimated at approximately 232 crashes per year (290 crashes/year x 0.8). This represents a crash reduction of approximately 58 crashes per year, within the study segment. FDOT State Safety Office estimates that the average cost per crash on a 4 to 5 lane arterial in an urban environment is approximately $123,598. Hence, the annual savings from crash reductions resulting from the Build Alternative can be estimated at approximately $7.17 million/year.

The proposed median modifications incorporated in the Build Alternative will provide additional crash reductions due to the reduction in conflict points at median openings. A review of FHWA's Crash Modification Factors Clearinghouse and the Highway Safety Manual, identified no reliable CMF or an associated safety performance function (SPF) to

support a quantitative safety analysis of the proposed median modifications. Hence, crash reductions anticipated from median modifications were not quantified for this study.

7.0 Summary of Analysis Results

EXISTING CONDITONS

The existing (2016) MGD typical section consists of 4 lanes (2 eastbound + 2 westbound) with local widening at intersections for turn lanes. The estimated annual average daily traffic (AADT) along the corridor ranges from approximately 31,400 to 45,800. The study segment includes 11 signalized intersections and 7 unsignalized (stop sign control) intersections. Substandard level of service (LOS E or F) is experienced at following signalized intersections during the AM and/or PM peak periods:

- MGD at NW 87th Avenue (signalized)
- MGD at NW 73rd Avenue (signalized)
- MGD at NW 68th Avenue (signalized)
- MGD at NW 67th Avenue/Ludlum Road (signalized)
- MGD at NW 62nd Avenue (signalized)
- MGD at SR 823/NW 57th Avenue/Red Road (signalized)

Access management is substandard along MGD. The corridor is classified as an Access Class 3 facility with minimum spacing of 2,640 feet between full median openings or signals, per access management criteria. Currently, there are 28 median openings along this corridor within the study area. All of the existing median openings have substandard spacing, and in most cases (24 of 28), the variance is more than 50% below the standard. Similarly, the spacing of existing signals violates the access management standards in 10 of the 11 locations, and the spacing variance exceeds 50% at four signal locations.

Analysis of historical crash records from 2012 to 2016 indicate that the corridor experienced a total 1,450 crashes during the five-year period or an of 290 crashes per year. These resulted in 3 fatalities and 502 injury crashes. Excessive congestion and inadequate access management control were identified as probable causal factors for crashes experienced along the corridor. The economic loss resulting from crashes on the corridor equate to approximately $35.8M per year

FUTURE NO BUILD CONDITIONS

The future No Build condition incorporates no roadway improvements along MGD. MGD will continue to experience substantial traffic growth under No Build Conditions. By year 2040 AADT along MGD will range from approximately 40,000 to 58,000 vehicles per day. This growth in traffic includes traffic forecasted to be generated along the corridor resulting from the American Dream Miami (ADM) and Graham Properties projects. With the continued growth in traffic, operations along MGD will continue to deteriorate in the future No Build Condition. By year 2040, all but two of the eleven signalized intersections along MGD will experience substandard level of service (LOS E or F) during the AM and/or PM peak periods. Average operating speeds during AM and PM peak periods are expected to range from approximately 10.5 mph (LOS F) to 12.7 mph (LOS F). In addition, segments along the corridor will continue to experience abnormally high crash rates, similar to the existing conditions.

FUTURE BUILD CONDITIONS

The future Build Alternative will widen MGD to incorporate a typical section consisting of six lanes (3 EB + 3WB) plus addition of bicycle lanes. The Build Alternative will also add turn lanes at critical intersections, namely, NW 87th Avenue, NW 73rd Street, NW 67th Avenue and NW 57th Avenue. MGD will continue to experience substantial traffic growth under the Build Alternative. By year 2040, AADT along MGD will increase to a range of approximately 44,000 to 64,000 vehicles per day. This growth includes traffic forecasted to be generated along the corridor resulting from the American Dream Miami (ADM) and Graham Properties projects.

Analyses indicate that the Build Alternative will provide substantial operational and safety benefits when compared to the No Build Alternative. Table 7.1 summarizes the anticipated benefits of the Build Alternative. These are discussed further below:

- Typical Section: The Build alternative widens MGD to provide increased capacity to meet future travel demand needs. The addition of bike lanes is consistent with FDOT's current design standards and policy for multi-modal accommodations.
- Intersection Operations: The Build Alternative reduces the number of intersections operating at substandard levels (LOS E & F) during the design year (2040) peak periods. In the No Build Alternative 9 signalized intersections will operate at LOS E/F whereas in the Build Alternative this is reduced to 6 intersections.
- Pedestrian Operations: The Build Alternative improves pedestrian operations from LOS E (2040 No Build) to LOS D (2040 Build). This improvement in pedestrian operations results mainly from the reduction in congestion level along the corridor within the lanes adjacent to the sidewalks.
- Bicycle Operations: The Build Alternative improves bicycle operations from LOS E (2040 No Build) to LOS C (2040 Build). This improvement in bicycle operations results from the provision of bicycle lanes in the Build Alternative.
- Bus Operations: Bus operations are comparable in the No Build (LOS B) and Build (LOS B) alternative. Bus operations are comparable in both conditions as no transit improvements are included in the Build Alternative, except for upgrading bus stops to include shelter and bench.
- Crash Reduction: The Build Alternative will improve safety conditions throughout MGD resulting in an estimated crash reduction of approximately 58 crashes per year. This equates to an annual cost savings of approximately $7.17M per year. These safety benefits result from the anticipated reduction of traffic congestion and improvements in bicycle facilities incorporated with the Build Alternative. Further safety benefits will also result from the proposed access modifications incorporated in the Build Alternative.

The results of the traffic analyses performed for the MGD Re-evaluation demonstrate that the proposed Build Alternative meets the objectives of the project. As presented above, the proposed improvements will provide congestion relief, enhance safety and provide additional capacity to support the future growth in transportation demand and socio-economic needs in northern Miami-Dade County. It is therefore recommended that the Build Alternative be advanced for final design and construction.

Table 7.1 Comparison of No Build and Build Alternative

Criteria	No Build	Build Alternative	Comments
Typical Section	4 lanes	6 lanes + Bicycle Lanes	Build has greater capacity and better facilities for multimodal use (consistent with FDOT's current design standards)
Operating Speed – 2040 peak periods	10.5 to 12.7 mph	11.2 to 16.3 mph	Build provides higher operating speeds
Substandard intersection operations (LOS E/F – in 2040)	9 Intersections substandard	6 Intersections Substandard	Build provides better intersection operations
2040 Pedestrian LOS	LOS E	LOS D	Build improves pedestrian operations
2040 Bicycle LOS	LOS E	LOS C	Build improves bicycle operations
2040 Bus LOS	LOS B	LOS B	Transit improvements limited to bus stop upgrades.
Crash Reduction	No crash reduction	Reduces approximately 58 crashes/year. Crash savings of $7.17M/year	Build Alternative enhances safety

APPENDIX A

Traffic Methodology Memorandum

MGD Re-evaluation

August 7, 2018

AUGUST 7, 2018

TRAFFIC METHODOLOGY MEMORANDUM (DRAFT)

SR 860/ Miami Gardens Drive from I-75 to SR 823/ NW 57th Avenue PE&E Re-evaluation

FM No.: 438864-1-22-02

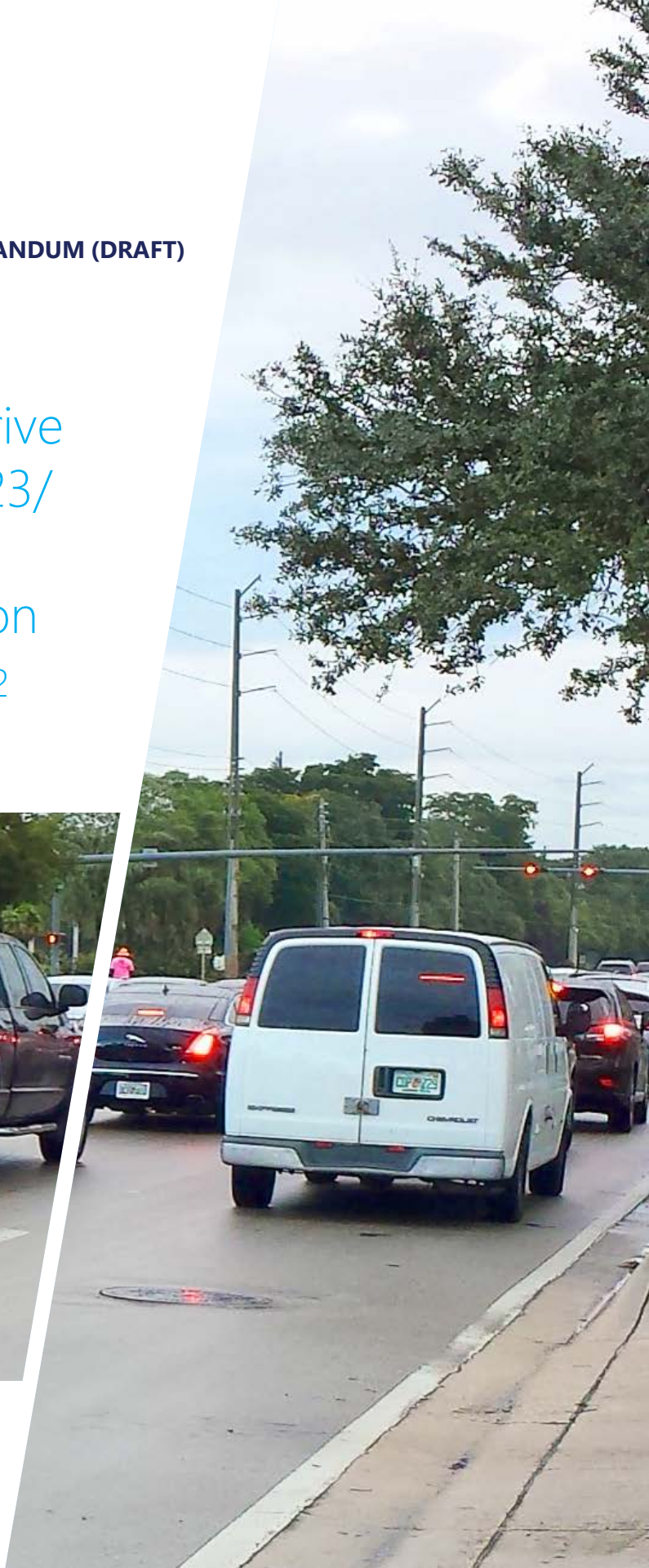

FDOT

SR 860/Miami Gardens Drive
PD&E Re-evaluation

FDOT Financial Management Number: 438864-1-22-02

TRAFFIC METHODOLOGY MEMORANDUM

Project Study Limits:
From east of I-75 to NW 57th Avenue

Prepared for:

FDOT District Six
1000 NW 111th Avenue
Miami, Florida 33172

Prepared by:
RS&H, Inc. and The Corradino Group

AUGUST 7, 2018

DRAFT

TABLE OF CONTENTS

1.0 INTRODUCTION 1

2.0 AREA OF INFLUENCE 1

3.0 ANALYSIS YEARS 3

4.0 TRAFFIC DATA COLLECTION 3

4.1 EXISTING YEAR AADT, AM AND PM PEAK HOUR VOLUMES 3

5.0 TRAVEL DEMAND FORECAST 4

5.1. Base Year SERPM Adjustments and Validation 4
5.2. Highway Networks Development 6
5.3. Traffic Analysis Zones (TAZ) Data 7
5.4. AADT and DDHV Volumes Development 8

6.0 TRAFFIC OPERATIONS ANALYSIS 12

LIST OF FIGURES

1 Project Location Map 2

2 Miami Gardens Drive Subarea 5

2 Design Traffic Forecasting Process Flowchart 10

1.0 Introduction

The Florida Department of Transportation (FDOT) is conducting a PD&E Re-evaluation for the segment of SR 860/Miami Gardens Drive, extending from east of I-75 to SR 823/NW 57th Avenue in Miami-Dade County, Florida. Figure 1 shows a location map for the project. It should be noted that the I-75 Interchange is not within the limits of this study. The purpose of the PD&E Re-evaluation is to further develop a preliminary improvement concept that meets the short term and long term transportation needs for the corridor. The Re-evaluation follows from a planning level study that was completed by the FDOT in April, 2018.

This technical memorandum describes the methodology that will be followed for travel demand forecasting and traffic operations analyses for the PD&E Re-evaluation. It outlines the base criteria, assumptions, procedures and analytical tools that will be used for the study. The methodology builds on and maintains consistency with the traffic analyses and preliminary engineering completed for the afore-mentioned Miami Gardens Drive (MGD) Planning Study.

2.0 Area of Influence

The area of influence will include the following intersections along Miami Gardens Drive:

1. NW 87th Avenue
2. Shopping Center Rear Entrance (East of NW 87th Avenue)
3. NW 84th Court
4. Mother of Our Redeemer Catholic School Entrance
5. NW 82nd Avenue
6. NW 79th Avenue
7. Wentworth Drive
8. Oakmont Drive
9. NW 75th Place
10. NW 73rd Avenue
11. NW 68th Avenue
12. Bob-O-Link Drive
13. Ludlam Road
14. NW 62nd Avenue
15. NW 59th Avenue
16. Shopping Center Entrance (Between NW 59th and NW 57th Avenue)
17. SR 823/NW 57th Avenue

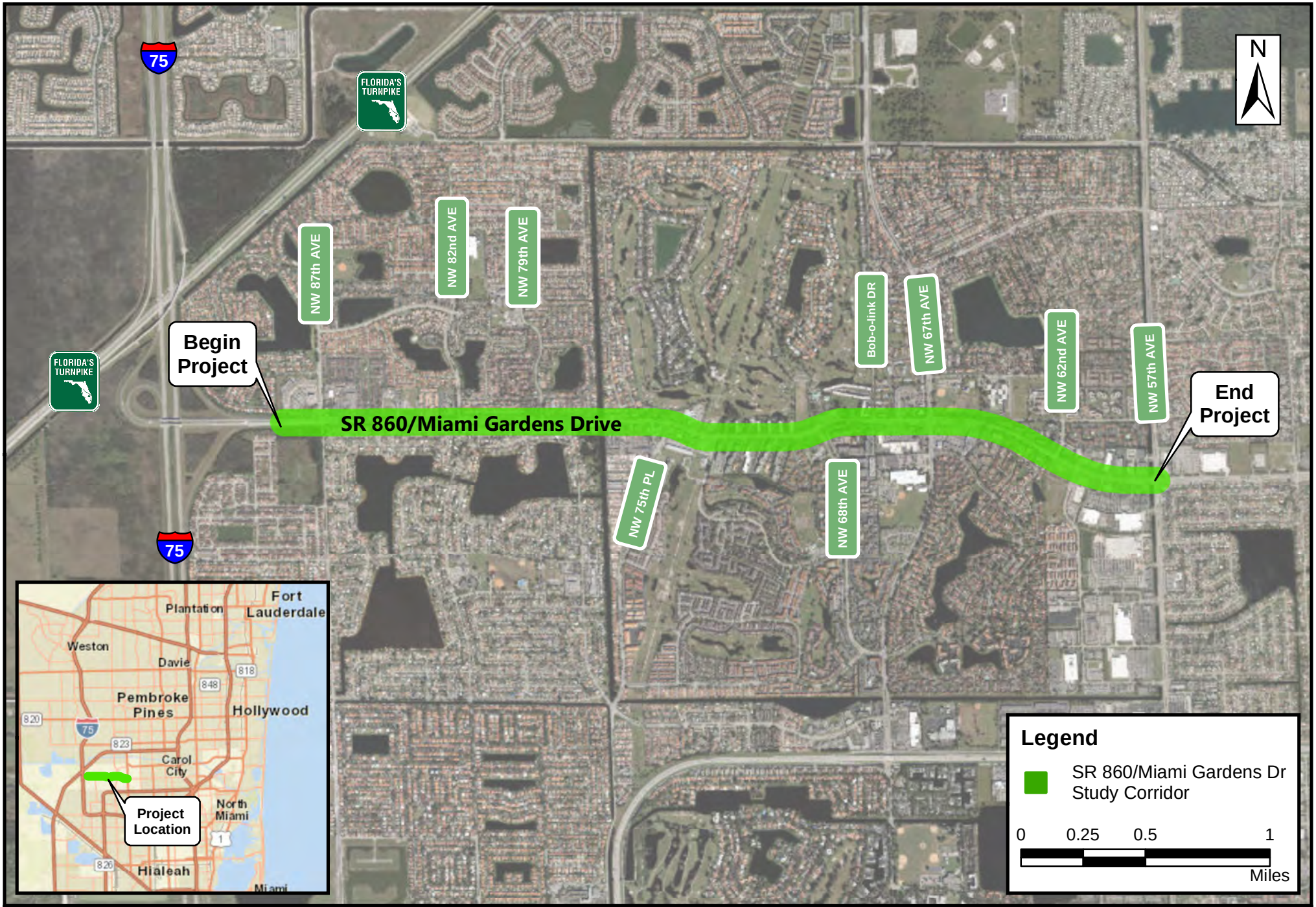

FDOT

SR 860/ Miami Gardens Drive
PD&E Re-evaluation

Project Location Map

Figure 1

3.0 Analysis Years

The analysis years for this Re-evaluation are as follows:

- Existing Year: 2016
- Opening Year: 2020
- Design Year: 2040

The above analysis years are consistent with the prior associated MGD Planning Study.

4.0 Traffic Data Collection

The Re-evaluation will utilize traffic data that was previously collected in 2016 for the associated MGD Planning Study. Traffic data previously collected include:

- Intersection turning movement counts (3 hours AM and 4 hours PM)
- 72-hour mechanical counts along various segments of the corridor
- Vehicle classification counts

4.1 Existing Year AADT, AM and PM Peak Hour Volumes

The Re-evaluation will utilize existing year (2016) traffic volumes that were previously developed for the associated MGD Planning Study. This includes, estimated annual average daily traffic (AADT), AM peak hour volumes and PM peak hour volumes for year 2016.

5.0 Travel Demand Forecast

Travel demand forecasts that were prepared for the prior MGD Planning Study will be updated for the Re-evaluation. The traffic forecast updates will reflect recent planned changes to the transportation network and land uses within the project study area. The travel demand forecasting procedures are described in the following sections.

Design traffic forecast is a critical input for performing future year operations analysis and identifying the types of improvements needed. This section describes the travel demand model forecasts development and refinements. AADT volumes, AM, and PM hourly volumes will be developed for the design year. The forecasts will be developed for a 2040 No-Build and a 2040 Build scenario, as part of this effort.

The most recent Southeast Regional Planning Model (SERPM7.71) will be used for developing forecasts for this study. This version is the most up-to-date version of SERPM7 model series, and will be referred to as SERPM7 hereinafter. SERPM7 model is the model used to develop the recent 2040 Long Range Transportation Plan (LRTP) for the Metropolitan Planning Organization (MPO). SERPM 7 model has a 2010 base year and 2040 horizon year. The 2040 horizon year scenario has the MPO approved 2040- Traffic Analysis Zones (TAZ) data and the 2040 cost feasible network inputs. A sample size of 25% will be chosen for the activity-based model run simulation. In general, for corridor studies, a 25% sample has been proven to be providing stable results. This is consistent with the model default settings. The model will run a maximum of 10 feedback runs, with the understanding that it might converge before reaching the maximum iterations settings.

5.1. Base Year SERPM Adjustments and Validation

This project will use the year 2016 subarea validation performed as part of the MGD Planning Study, the predecessor to this effort. A subarea was developed outlining an approximately 2–mile radius buffer around the corridor (see Figure 2). The subarea validation was focused on statistics within this study area. Using the 2010 base year model network developed for the SERPM7 model validation, a 2016 existing year network was developed for performing the subarea model validation. The 2016 model input TAZ datasets were developed by interpolation.

Model network attributes such as posted speeds, number of lanes, and facility types were verified closely against existing data sources within the area of influence. A full regional model run was performed and validation statistics within the subarea were verified. Through this effort, all major issues with network connections and model assignments were resolved. All modifications/adjustments to the SERPM network were documented in the planning study. Hence, no additional model validation will be performed as part of this Re-evaluation.

Figure 2: Miami Gardens Drive Subarea

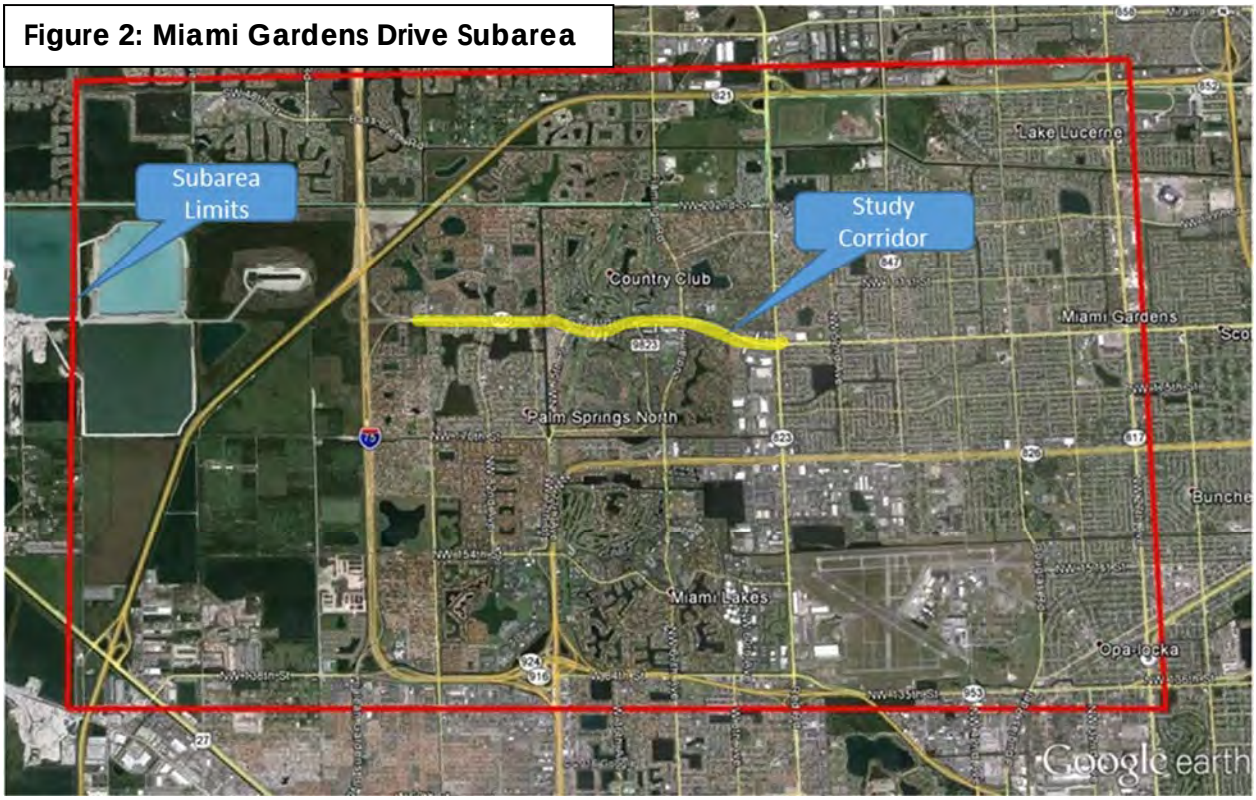

A CUBE Analyst trip table adjustment process was implemented using the 2016 subarea network developed for the study. The trip table adjustment process used the time-of-day traffic counts and the prior trip table from the travel demand model as inputs. The traffic assignment results from this procedure were closely validated to 2016 traffic counts. This 2016 adjusted trip table will be used as the baseline for performing the future year forecasted trip tables in the Re-evaluation. The model volumes error margin was reduced significantly, by using this procedure. FDOT's FSUTMS-Cube Framework Phase II Model Calibration and Validation Standards were used as reference in the model validation. Percent root mean squared error (RMSE) and volume-to-count ratio statistics were used

to evaluate the model validation. The RMSE target for a Time of Day, 2-mile radius subarea assignment is 25%. Volume-to-count ratio target is 5% deviation. These targets were used in the subarea model validation process.

The following method will be used in performing the future year trip table adjustment process. The development of the 2040 trip tables' adjustment process is described below:

- Use the 2016 project validation scenario in SERPM7 model. Use the 2016 CUBE Analyst Trip Table as baseline (A).
- Use 2016 prior trip table and 2040 prior trip tables, and develop the difference in trip tables. This difference is called the growth (G) in the subarea.
- Develop the 2040 "Future Adjusted" Trip Tables (F) by adding A and G (F=A+G).
- Perform reasonableness checks on the adjusted trip tables, and make any post-processing adjustments (as needed). Since the base year is validated very closely to the traffic counts, in many cases, post-processing for future years is not necessary. Any future unreasonable model volumes will be adjusted manually by post processing.

The trip table adjustment process was automated using CUBE Voyager software in the Planning Study, at the subarea level.

5.2. Highway Networks Development

The following model networks will be developed as part of this Re-evaluation:

- Design Year 2040 No-Build
- Design Year 2040 Build

The networks will match the corresponding analysis year network assumptions described below:

- **Validation Year 2016 (Developed in Planning Study):** The 2010 network from SERPM7 model was used as the basis for this effort. This network was compared with the existing conditions and supplemented with additional coding of the missing projects between the years 2010-2016.

Design Year 2040 No-Build: The 2040 No-Build network developed for the Planning Study will be used as the starting point in this effort. This network was prepared by using the 2040 cost feasible regional LRTP network as the basis. I-75, HEFT, SR 924 and SR 826 future improvements, matching the latest approved designs were incorporated. A close review of this network will be conducted within the area of influence of the study to reflect the 2040 conditions. One major project that can affect the forecasts of Miami Gardens Drive PD&E Re-evaluation is the opening of NW 170th Street East-West segment crossing I-75. This project will be included in the No-Build conditions. Any new transit routes or changes to the existing transit routes that affect the Miami Gardens Drive Study Area will be coded in the model. Any planned park-and-ride lots will be coded. The proposed American Dream Miami (ADM) and Graham Properties development will be incorporated in the No-Build alternative modeling.

Design Year 2040 Build: A 2040 Build scenario (6L option) will be developed as part of this effort. The No-Build networks developed as part of this study will be used as the baseline for the build alternatives network development. The Build alternative is expected to include a six-lane typical section along Miami Gardens Drive. The proposed American Dream Miami (ADM) and Graham Properties development will be incorporated in the Build alternative modeling.

5.3. Traffic Analysis Zones (TAZ) Data

The TAZ demographic data for the year 2016 was developed by interpolation using the 2010 and 2040 data from the SERPM model. A review of the 2040 SERPM7 Cost Feasible model TAZ data, within the area of influence, will be performed including a check for any negative growths. The American Dream Miami Approved Development intensities will be used and compared against the 2040 MPO-forecasted TAZ data. Adjustments to the 2040 TAZ data will be performed as needed, by coordinating with the FDOT.

5.4. AADT and DDHV Volumes Development

The following table shows the representation of time periods in the SERPM7 model. Trip table refinements were performed to all of these five different time periods independently, during the Planning Study. The 24-hour AADT volumes were developed by summing the assignment volumes from individual time periods.

Number	Description	Begin Time	End Time
1	Early	3:00 AM	5:59 AM
2	AM Peak	6:00 AM	8:59 AM
3	Midday	9:00 AM	3:00 PM
4	PM Peak	3:00 PM	6:59 PM
5	Evening	7:00 PM	2:59 AM

Because the subarea model was validated rigorously at the time of day level, the AM and PM time period volumes produced by the subarea model will be used in developing the design traffic. The DDHV volumes development process for the study will not involve the application of the standard procedure of multiplying the AADT volumes with the K_{30} and D_{30} traffic factors. Rather than this approach, the forecasting methodology in this study will involve efficiently using the time-of-day features of the travel demand model. The SERPM model is a time-of-day model that reports 3-hour AM peak volumes, 4-hour PM peak volumes and 17-hour off-peak volumes. The DDHV volumes will be developed from the peak period volumes of the travel demand model. The DDHV volumes development will involve the use of diurnal factors applied to the model estimated peak periods (AM and PM) volumes. The diurnal factors, in this case, are defined as the ratio of the peak hour volume to the peak period volume.

The AM and PM period-specific diurnal factors were developed from the existing traffic data collected as part of the Planning Study. The traffic data collected at 15-minute increments at all locations in the study's area of influence was analyzed for both AM and PM conditions. Since the intersection congestion is expected to occur in the AM or PM conditions, the design hour forecasts will be

performed for a typical AM period, and a PM period. Nevertheless, as part of the design traffic forecasting process, AADT volumes will be developed by combining AM, PM and off-peak period volumes.

The following step-by-step procedure was implemented in developing the diurnal factors:

- Traffic counts were tabulated and organized in a spreadsheet table in 15-minute increments.
- An hourly directional volume was computed for each 15-minute increment by computing the summation of the four consecutive intervals.
- The highest hourly volume was highlighted.
- The diurnal factor was computed as the highest hourly volume divided by the peak period volume.
- The data and the factors were examined throughout the study area corridors for logical similarities.

The DDHV volumes in the peak and non-peak directions were estimated by using the following formula:

DDHV = peak period volume x diurnal factor

Note that there are no directional factors involved in this method of DDHV volumes estimation. This means that the model's directional peak period volumes will be used to develop the future year DDHV volumes. The AM and PM DDHV volumes will be balanced along the entire corridor. For the intersection turning movement volumes development, the future turns will be determined by using the SERPM subarea assignment. Adjustment to problematic turns will be performed by manual post-processing.

The AADT volumes developed for the corridor will be verified for reasonableness. Independent data sources, such as traffic count trends, and compound growth rates using the region's population and employment will be used to verify the future year projections.

Figure 3 presents the Design Traffic Forecasting Process Flowchart.

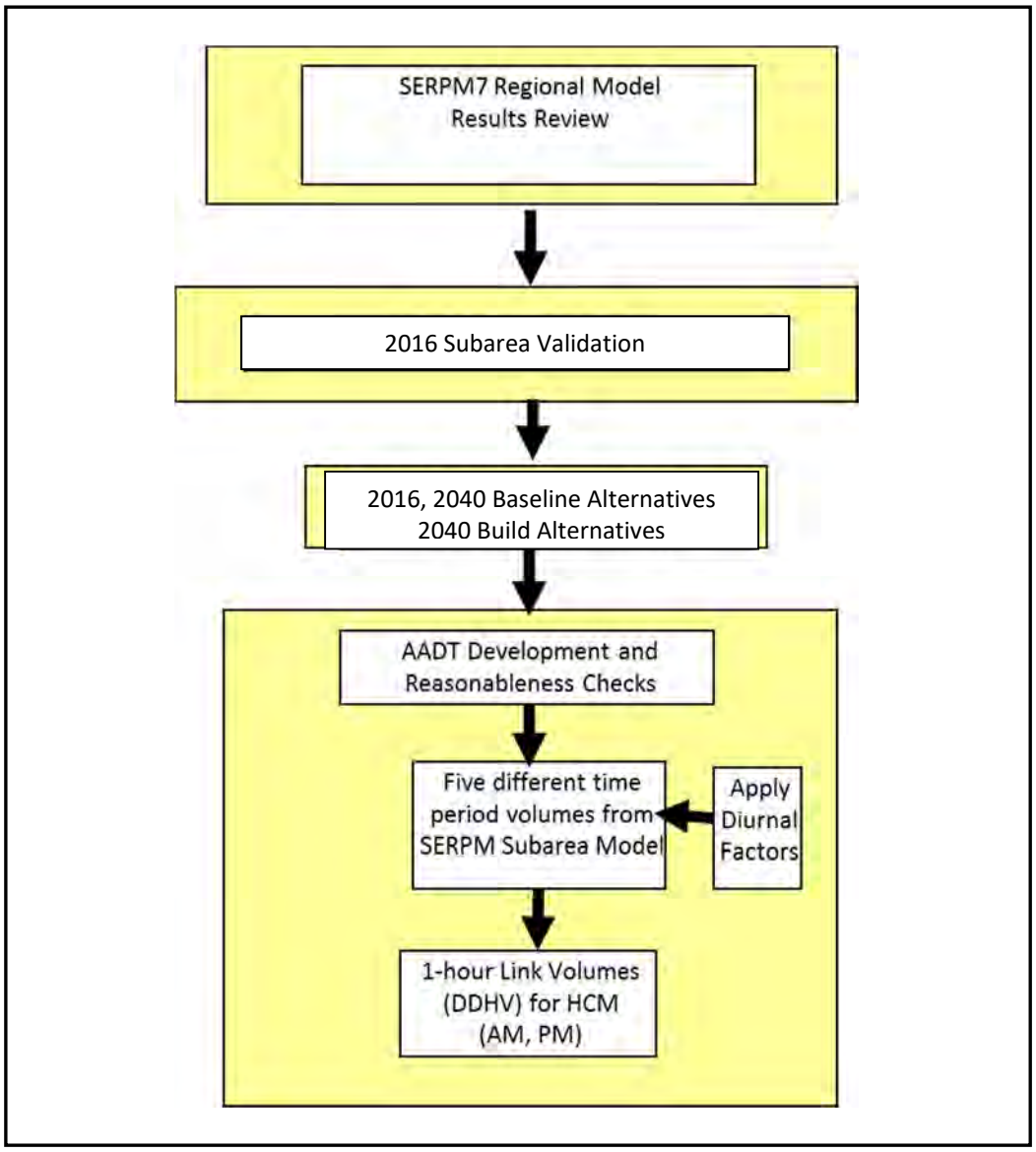

Figure 3 – Design Traffic Forecasting Process Flowchart

5.5 Turning Movement Forecast Development

The turning movement forecasts will be developed for all of the intersections within the study area. Since the CUBE Analyst OD estimation process is expected to generate reasonable turning movements, the turning movement forecasts will be extracted directly from the subarea model. Quality control and reasonableness checks will be performed against these turning movements. The turns will be compared to existing turns, and future potential developments to evaluate the future projections.

The 2020 AADT, DDHV and turning movement volumes will be developed for the No-Build and Build alternatives by interpolation methods.

The manual adjustments to the forecasts will be performed when the future model volumes are projected to be less than the base model volumes from the travel demand model. In addition, if unreasonable growth is projected on certain links, these projections will be manually adjusted by comparing against the average compound growth rates from the socioeconomic data and the traffic trend line forecasts

6.0 Traffic Operations Analysis

Consistent with the prior MGD Planning Study, traffic operations analyses will be performed using the Highway Capacity Manual, 2010 procedures. Computations will be performed using Synchyo 10 for intersections and arterial segments. Synchro models will be developed in accordance with guidelines contained in the FDOT Traffic Analysis Handbook, 2014. Models will utilize the following factors:

- Peak Hour Factors (PHF) - as computed from existing year traffic counts.
- Design Hour Truck (DHT) factors – as estimated from existing year traffic counts.
- Signal timings – per Miami-Dade County

Operations analyses will utilize Syncho models that were previously calibrated under the prior MDG Planning Study. The existing year (2016) models were calibrated to reflect the general level of congestion and queue lengths observed during field reviews conducted under typical weekday AM and PM peak periods. Models for future year conditions will utilize peak hour volumes from the travel demand forecasting process. Peak hour factors and truck factors will be assumed constant for all analysis years. Signal timings will be optimized for analysis of future year conditions. Measures of effectiveness (MOEs) gathered from the models will include: level of service, delays and queue lengths. Microsimulation will not be performed as part of this Re-evaluation.

Level of Service conditions for bicycle and pedestrian traffic will be assessed in accordance with 2013 FDOT Quality Level of Service Handbook.

APPENDIX B

MGD Corridor Planning Study
Technical Memorandum No. 1
Existing Conditions

JANUARY 5, 2017

TECHNICAL MEMORANDUM NO.: 1,
EXISTING CONDITIONS (FINAL)

SR 860/ Miami Gardens Drive from East of I-75 to SR 823/ NW 57th Avenue Corridor Planning Study

FM No.: 438864-1-22-01

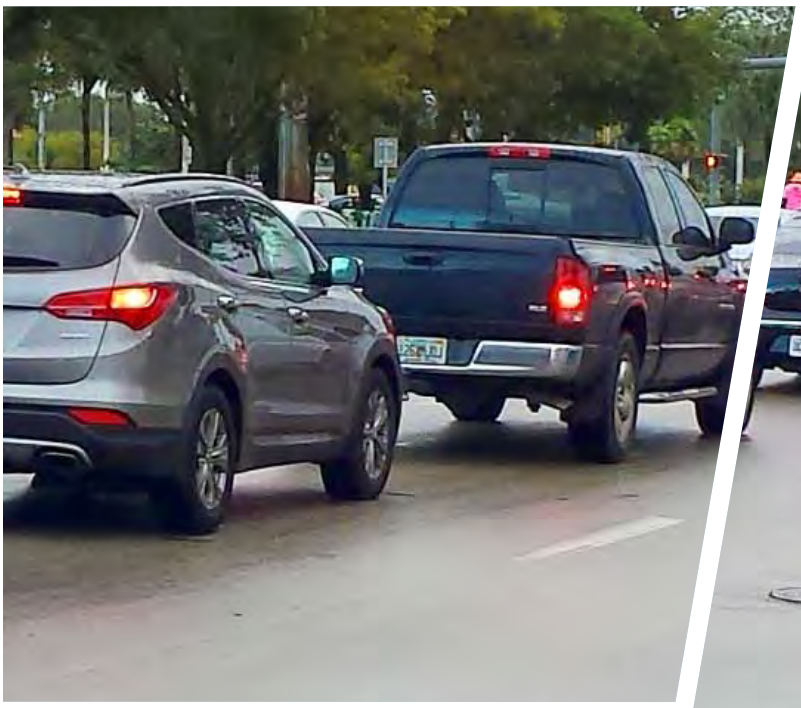

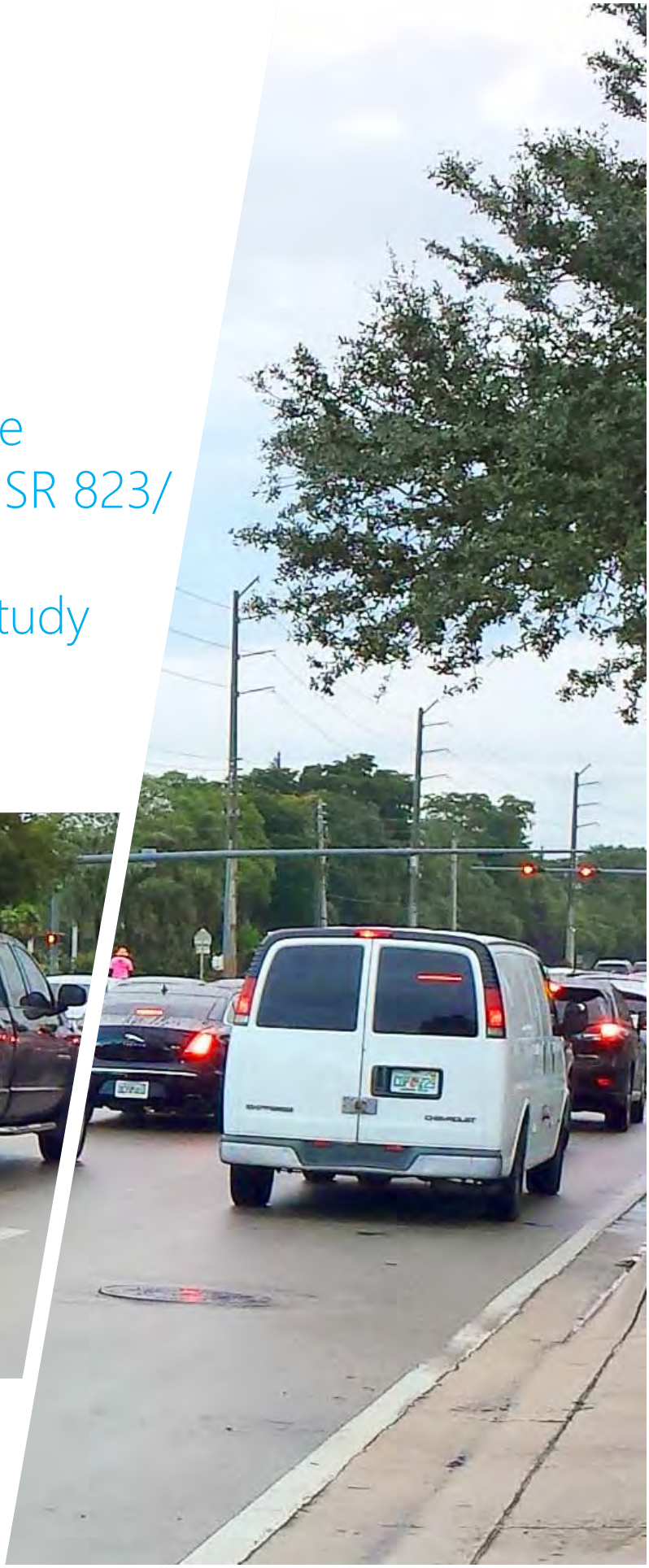

FDOT

SR 860 / MIAMI GARDENS DRIVE FROM EAST OF I-75 TO NW 57TH AVENUE CORRIDOR PLANNING STUDY

TECHNICAL MEMORANDUM NO.: 1 EXISTING CONDITIONS (FINAL)

Financial Project ID: 438864-1-22-01
Miami-Dade County

Prepared For:
FDOT District Six
1000 N.W. 111 Avenue,
Miami, Florida 33172.

Prepared by:
RS&H, Inc.
6303 Blue Lagoon Drive, Suite 325
Miami, FL 333126

January 5, 2017

Technical Memorandum No. 1

Existing Conditions

TABLE OF CONTENTS

1.0 Summary of Project 1-1

1.1 Project Description 1-1

1.2 Need for the Project 1-4

2.0 Existing Conditions 2-1

2.1 Land Use 2-1

2.2 Right-of-Way 2-4

2.3 Typical Section, and Pedestrian and Bicycle Facilities 2-4

2.4 Drainage 2-5

2.5 Lighting 2-6

2.6 Utilities 2-6

2.7 Access Management 2-6

2.8 Intersection Inventory 2-11

2.9 Traffic Data 2-13

2.10 Level of Service 2-17

2.11 Transit Assets and Service Routes 2-21

2.12 Crash Analysis 2-23

3.0 Conclusions 3-1

LIST OF TABLES

Table 2.1: Existing Land Use (1/2 Mile Buffer) 2-1
Table 2.2: Assessment of Existing Median Opening Spacing 2-8
Table 2.3: Assessment of Existing Signal Spacing 2-9
Table 2.4: Assessment of Existing Driveways Spacing 2-10
Table 2.5: Existing Traffic Signals 2-12
Table 2.6: 2016 AADT Computation Sheet 2-15
Table 2.7: Level of Service Summary – Signalized Intersections 2-18
Table 2.8: Level of Service Summary – Unsignalized Intersections 2-20
Table 2.9: NW 73rd Street Park & Ride Lot – Patronage Summary 2-21
Table 2.10: Corridor Crash Statistics 2-25

LIST OF FIGURES

Figure 1-1: Project Location Map 1-3
Figure 2-1: Existing Land Use Map 2-2
Figure 2-2: Traffic Count Sites 2-14
Figure 2-3: Existing (2016) AADT and Peak Hour Volumes 2-16
Figure 2-4: Bus Route Map 2-22
Figure 2-5: Crash Distribution Chart 2-26

LIST OF APPENDICES

APPENDIX A Existing Roadway Plans
APPENDIX B Signal Timing Sheets
APPENDIX C Traffic Counts
APPENDIX D LOS Analysis
APPENDIX E Transit Routes

1.0 Summary of Project

1.1 Project Description

SR 860/Miami Gardens Drive (MGD) is a state principal, east-west arterial located in northern Miami-Dade County, Florida. The existing arterial consists of four lanes (two eastbound and two westbound) with a raised central median. The Florida Department of Transportation (FDOT) is conducting a Corridor Planning Study for the segment of MGD from east of I-75 (MP 0.438) to NW 57th Avenue (MP 3.664) – approximately 3.2 miles. Figure 1-1 depicts a location map for the study segment. This study was preceded by a Project Development and Environment (PD&E) Study completed in 2006 and subsequent Re-evaluation Study in 2009. More recently, residents of the community have raised concerns regarding recurring traffic congestion throughout the study corridor. As a result, the FDOT made a commitment to the community to investigate their concerns and accordingly develop transportation improvement strategies.

The purpose of this corridor planning study is to identify feasibly transportation improvements to meet the short term and long term transportation needs of Miami Gardens Drive. Specifically, the study will:

- Assess existing roadway and traffic conditions within the study corridor
- Develop travel demand forecasts for horizon years 2020 and 2040 for alternative future land use and network scenarios
- Develop alternative conceptual roadway improvements for the corridor
- Conduct public outreach to assess stakeholders' interests and public concerns for consideration in the developing of transportation improvement plans.
- Evaluate alternative roadway improvement strategies and provide recommendations for advancing to the PD&E Study process.

The following potential roadway improvements are under consideration for this study:

- Full widening of MGD from four to six lanes, with and without bicycle lanes
- Partial widening of MGD from four to six lanes, with and without bicycle lanes

- Maintaining four lanes on MGD with transportation system management and operations (TSM&O) improvements, with and without bicycle lanes
- No Build Alternative

Findings from the Corridor Planning Study are being documented under the following technical memoranda/reports:

1. Technical Memorandum No. 1: Existing Conditions
2. Technical Memorandum No. 2: Traffic Methodology
3. Technical Memorandum No. 3: Design Traffic
4. Technical Memorandum No. 4: Traffic Operations Analysis
5. Technical Memorandum No. 5: Development of Conceptual Alternatives
6. Technical Memorandum No. 6: Public Involvement
7. Recommendations and Final Report

This report documents the existing corridor conditions (Technical Memorandum No. 1).

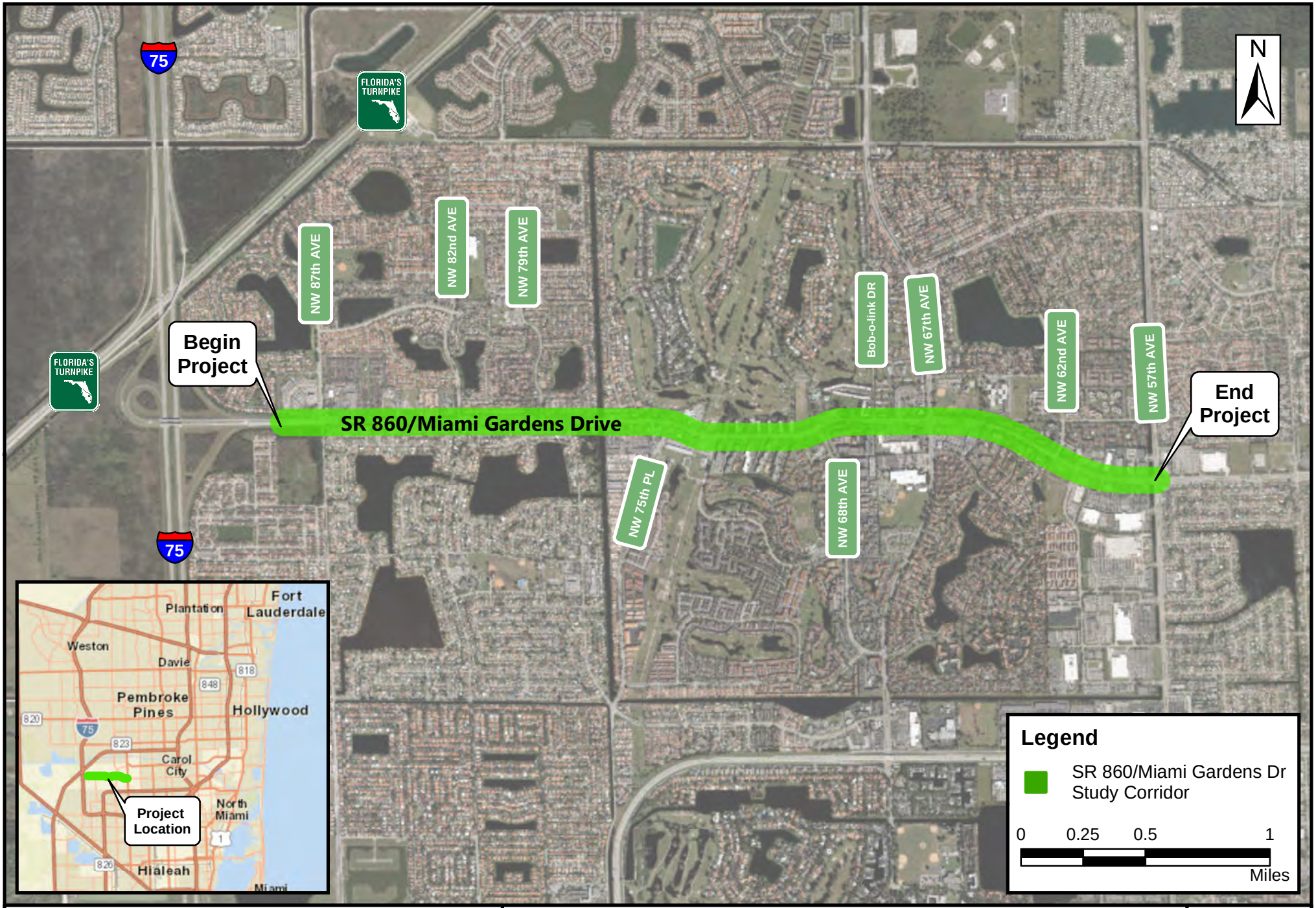

FDOT

SR 860/ Miami Gardens Drive Planning Study

Project Location Map

Figure 1-1

1.2 Need for the Project

The purpose of this project is to develop recommended transportation improvements for the segment of Miami Gardens Drive, from approximately 770 feet west of NW 87th Avenue to SR 823/NW 57th Avenue, in Miami-Dade County, Florida. The need for these improvements relates primarily to transportation demand, safety and socio-economic demands. These needs are elaborated below.

The need for the project is based on the following:

- **Congestion Relief and Transportation Demand:** Existing (2016) traffic conditions along MGD are characterized by congestion with substandard operating conditions throughout much of the corridor during both AM and PM peak periods. MGD has been recognized by Miami-Dade County as one of the top 10 neediest corridors for congestion management. Travel demand forecasts indicate that the corridor will experience continued growth through year 2040. Existing year (2016) daily traffic volumes range from approximately 30,000 to 45,000 vehicles per day. Forecasted daily volumes for horizon year 2040 are expected to exceed 60,000 vehicles per day along segments of the corridor. Hence, with no improvements, the project corridor will continue to experience high delays and increasing congestion through the year 2040. Driving conditions for commuters will further deteriorate, falling well below acceptable level of service (LOS) standards.
- **Safety:** A review of the most recent 5-year (2011 – 2015) crash records shows that 1,181 crashes were reported along the subject segment of MGD. These reported crashes included four (4) fatalities and over 440 injuries. Furthermore, segments of the corridor have repeatedly appeared on the FDOT's listing of high crash spots and high crash segments. Several contributing factors have been identified including inadequate access control, traffic congestion and excessive queueing at intersections. Safety improvements are needed along the corridor to reduce the high frequency of crashes that is currently experienced. Carrying out these safety improvements is consistent with Florida's Strategic Highway Safety Plan and commitment to reducing fatalities and serious injuries along on state highways.

- **Socio-Economic Demands:** MGD from I-75 to US 1 provides connectivity to support much of the social and economic vitality of northern Miami-Dade County. It is a main east-west transportation connector for several major north-south arteries, including I-75, I-95 and US 1. These north-south facilities provide regional access to communities throughout Southeast Florida. The eastern end of MGD contains an important retail district, which includes the Aventura Regional Mall. The Hard Rock Stadium is another major attraction within the corridor's area of influence. The western end of the corridor is predominantly residential and has seen rapid growth in recent years. This growth at the western end of the corridor is expected to continue with the potential for major retail and entertainment activity centers west of I-75. The project improvements will support the future development and economic growth by improving access to areas in northern Miami-Dade County.

2.0 Existing Conditions

The study corridor extends along Miami Gardens Drive from approximately 770 feet west of NW 87th Avenue to NW 57th Avenue in northwest Miami-Dade County. The corridor is approximately 3.2 miles and consists of 11 signalized intersections and one emergency fire station signal. A minimum of two eastbound lanes and two westbound lanes are provided throughout the corridor with local widening at intersections to provide auxiliary through lanes and turn lanes. MGD is classified as a State Principal Arterial with Access Class 3 designation and posted speed limit of 40 miles per hour (mph). Plan sheets in Appendix A (under separate cover) depict existing conditions within the study corridor. The following describes the existing year (2016) conditions.

2.1 Land Use

The project corridor is located in the north-central area of unincorporated Miami-Dade County, east of I-75. Figure 2-1 graphically depicts the existing land uses within a one-half-mile buffer of the study corridor. Land uses are tabulated in Table 2-1.

Table 2.1: Existing Land Use (1/2 Mile Buffer)

Land Use Category	Percentage of Total
Residential	41%
Transportation	20%
Recreational	10%
Water	9%
Commercial / Industrial	7%
Vacant	4%
Government	3%
School	3%
Utilities	1%
Church / Religious	1%
Pasture	<1%
Hospital	<1 %
All Land Use Categories	100%

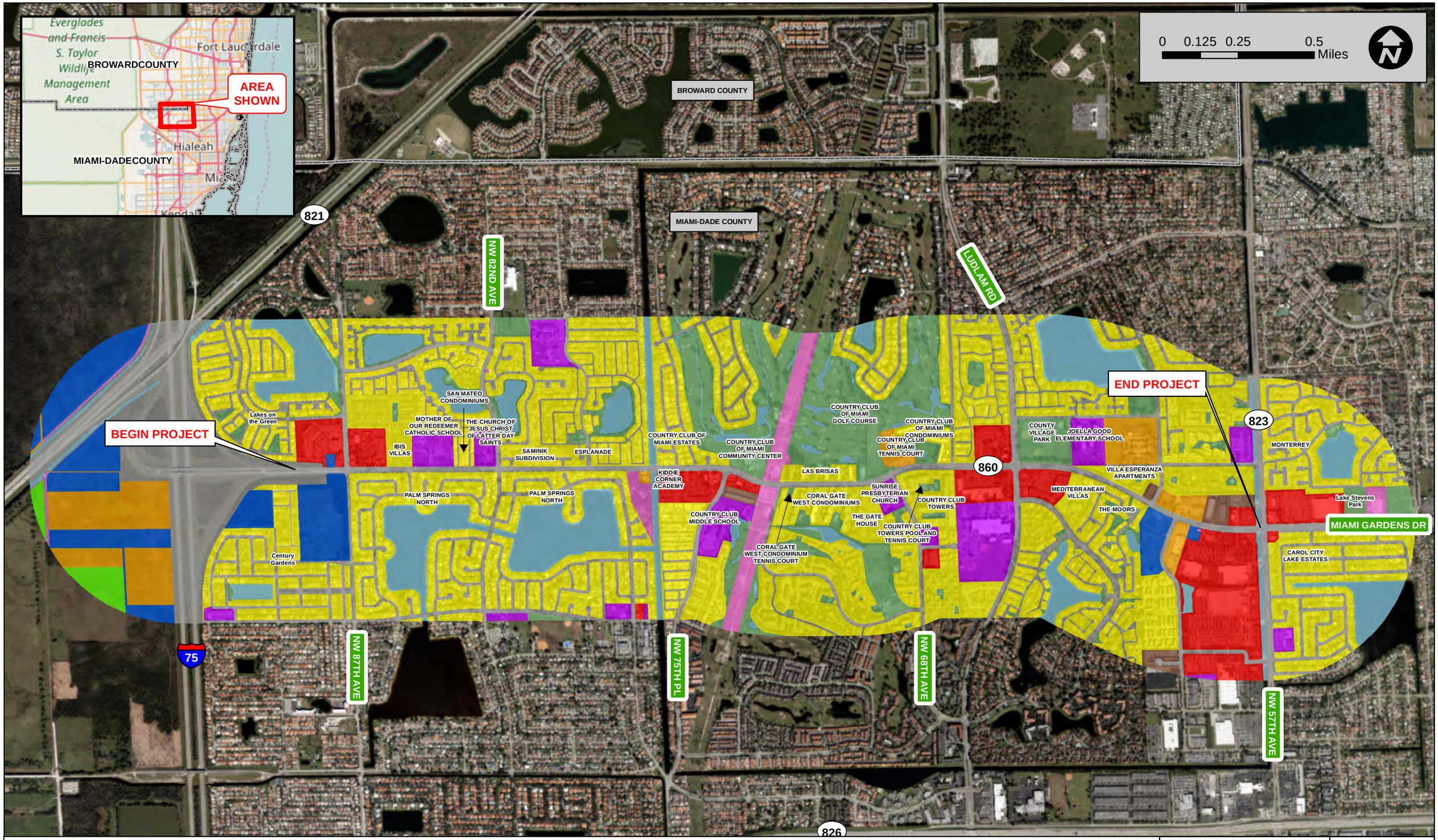

FDOT

SR 860/Miami Gardens Drive
Corridor Planning Study
FPID No.: 438864-1-22-01
FDOT - District 6 / Miami-Dade County

Existing Land Use

- Water
- Institutional
- Utilities
- Recreational
- Governmental
- Transportation
- Industrial
- Residential
- Commercial
- Pasture
- Vacant

Existing Land Use Map

Source: Miami-Dade, 2016

Figure: 2-1

The dominant land use within the project corridor is Residential. Residential makes up 41% of the project area and includes Single-Family, Low-Density (Under 2 DU/Gross Acre) to High-Density (Over 5 DU/Gross Acre, other than Townhouses, Duplexes, and Mobile Homes), Multi-Family, Low-Density (Under 25 DU/Gross Acre) and High-Density (Over 25 DU/Gross Acre), Townhouses, and Two-Family (Duplexes). The single-family home communities adjacent to the project include Palm Springs North, Esplanade, Lakes on the Green, Century Gardens, The Moors, and Country Club of Miami Estates. The multi-family complexes adjacent to the project include Coral Gate, Country Club Towers, Mediterranean Village, Ibis Villas, San Mateo, Las Brisas, Country Club of Miami Condominiums, and Villa Esperanza.

Transportation (20% of total land use) accounts for the second largest land use category followed by recreational (10%). Recreational areas include, the golf courses associated with the Country Club of Miami, and county parks scattered throughout the project corridor. Commercial developments are concentrated near major intersections, such as: NW 57th Avenue; NW 67th Avenue and NW 87th Avenue. Noise sensitive sites account for about 55% of the existing land use. Noise sensitive sites consists of schools, churches, residential, recreational and three commercial sites (Academy for Young Learners, Carrabba's Italian Grill and Kiddie Corner Academy).

2.2 Right-of-Way

The existing right-of-way and survey station references along MGD are depicted in the roadway plans in Appendix A (under separate cover). The existing right-of-way width varies between 105 feet and 123 feet. From STA 75+40 (approximately 340 feet west of NW 87th Avenue) to STA 127+40 (approximately 650 feet east of NW 79th Avenue) the right-of-way width is 105 feet, from STA 127+40 to STA 233+40 (approximately 230 feet east of NW 62nd Avenue) the right-of-way width is 110 feet, and from STA 233+40 to STA 240+00 (approximately 140 feet west of NW 57th Avenue) the right-of-way width is 123 feet.

2.3 Typical Section, and Pedestrian and Bicycle Facilities

The existing MGD typical section consists of a sub-urban normal crown section with four 12-foot lanes (2 in each direction), a 19-foot raised median, and 3-foot wide valley gutters along the outside edge of pavement on either side of the road. There are existing grass swales that vary in width between 9.5 feet and 14.5 feet, located between the back of the shoulder gutter and front of sidewalk on either side of the road. The existing 5- to 7-foot wide sidewalks run along the entire corridor with the back of sidewalk abutting the north and south right-of-way lines. All major side streets within the project's limits have north-south sidewalks that connect to the MGD east-west sidewalk/pedestrian network. In addition, crosswalks are provided at signalized intersections. There are no designated or undesignated bicycle facilities within the project limits. During field reviews, several bicyclists were observed using the sidewalks along the corridor.

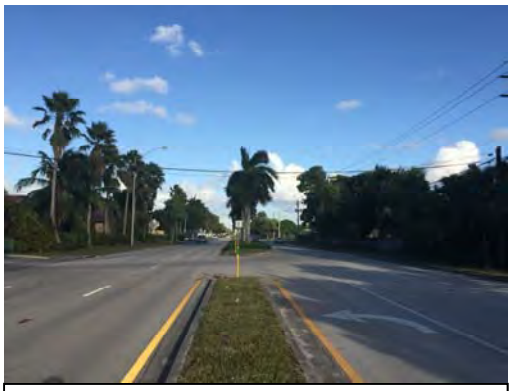

Photo depicting typical section

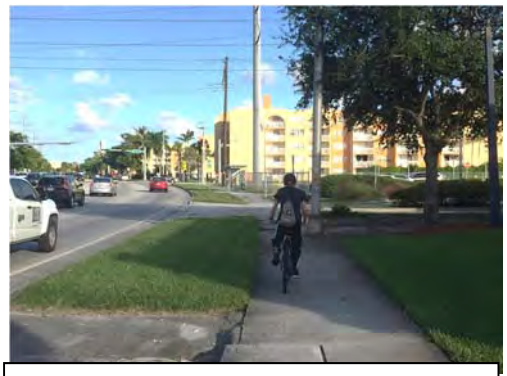

Cyclists use existing sidewalks

2.4 Drainage

There are two drainage systems within the MGD corridor study area. System A collects and conveys runoff from west of NW 87th Avenue to the infield ponds at the MGD and I-75 interchange via pipes and open swales. Stormwater is treated and attenuated within the interchange ponds prior to discharge to the C-9 Canal via Turnpike drainage ditches. System A extends from NW 87 Avenue to the Peters Pike Canal, while System B extends from the Peters Pike Canal to NW 57 Avenue. Roadway runoff from Systems A and B is collected along the valley gutters on either side of the road and conveyed to Ditch Bottom Inlets (DBI) or Type 5 and 6 curb inlets with paved flumes. The existing DBIs are located within the grass swales and the Type 5 and 6 curb inlets are located along the front of sidewalk. There are some existing French Drains along the corridor within Systems A and B that treat and attenuate runoff prior to discharge. Drainage structures also include two large box culverts - one spans the Peters Pike Canal at STA 132+00 (approximately 400 feet west of Wentworth Drive) while the second box culvert spans the Red Road Canal at STA 240+40 (located immediately west of NW 57th Avenue).

The Federal Emergency Management Agency (FEMA) Flood Insurance Rate Map (FIRM), Community Panels 12086C0105L (effective 09-11-2009) and 12011C0710H (effective 08-18-2014) depict the entire project corridor within the 100-year flood plain Zone AE with a base flood elevation of 7 feet-NGVD. The study corridor does not have a history of flooding.

Existing Typical Curb Inlet

Existing Typical Ditch Bottom Inlet

Peters Pike Canal

2.5 Lighting

Existing roadway lighting along the corridor consists of 400 Watt high pressure sodium vapor luminaries with self-contained 480 volts regular type ballast mounted on aluminum poles. Poles are spaced approximately 225 feet apart and are located along the north sidewalk from NW 87th Avenue to the Peters Pike Canal. From east of the Peters Pike Canal to NW 57th Avenue the light poles are located along the south sidewalk.

2.6 Utilities

The presence of utilities was reviewed along the corridor, and the following were confirmed:

- Miami-Dade Water and Sewer
- Miami-Dade Public Works and Traffic
- Florida Power and Light
- FPL Fibernet
- Comcast Cable
- AT&T Distribution
- Florida City Gas
- Buckeye Pipe Line

2.7 Access Management

MGD is classified as an Access Class 3 facility between I-75 and NW 57th Avenue. According to the FDOT Access Management Standards, the following minimum spacing requirements apply for Access Class 3 facilities with 40 MPH speed limit:

- Full Median Opening Spacing – 2,640 feet
- Directional Median Opening – 1,320 feet
- Signal Spacing – 2,640 feet
- Driveway Spacing – 245 feet

Currently, there are 27 median openings along this corridor within the study area. Table 2-2 and 2-3 summarize the existing median opening spacings and signal spacings compared against the standard minimum spacing. As shown in Table 2-2, all of the existing median openings have substandard spacing, and in most cases (24 of 27), the variance is more than

50% below the standard. Similarly, the spacing of existing signals violates the access management standards in 10 of the 11 locations, and the spacing variance exceeds 50% at four signal locations.

Existing driveway spacings are summarized in Table 2-4. Currently there are 38 driveways located on the south-side of MGD and 40 driveways are located on the north-side of MGD. The spacing between driveways are substandard at 16 (42%) locations along the south-side of MGD. Similarly, driveway spacings are substandard at 21 (53%)locations along the north-side of MGD.

Table 2.2: Assessment of Existing Median Opening Spacing

Median Location	Station	Median Opening Type	Spacing of Opening (feet)	Standard Spacing (feet)	Variance (feet)	Variance (%)
NW 87th Ave.	78+75.25	Full (signal)	-			
Garden Square Shopping Plaza East Driveway	85+50.00	Full	677	2640	-1963	-74.36
NW 84th Ct. / Mother of our Redeemer Catholic School	90+20.00	Full	470	2640	-2170	-82.20
NW 82nd Ave.	105+13.50	Full (signal)	1494	2640	-1146	-43.41
NW 79th. Ave.	120+80.00	Full (signal)	1566	2640	-1074	-40.68
Fire Station	130+30.00	Full	950	2640	-1690	-64.02
264' east of Fire Station	133+10.00	Full	264	2640	-2376	-90.00
Wentworth Dr.	136+00.00	Full	294	2640	-2346	-88.86
West Oakmont Dr.	139+60.00	Full (signal)	360	2640	-2280	-86.36
NW 75th Pl.	144+60.00	Full (signal)	500	2640	-2140	-81.06
Old Elm Dr.	150+00.00	Full	540	2640	-2100	-79.55
NW 73rd Ave.	154+70.00	Full (signal)	476	2640	-2164	-81.97
Coral Gate Apartments West Driveway	159+80.00	Full	500	2640	-2140	-81.06
320' east of Coral Gate Apartments West Driveway	163+00.00	Full	320	2640	-2320	-87.88
Coral Gate Apartments East Driveway	166+00.00	Full	300	2640	-2340	-88.64
360' east of Coral Gate Apartments East Driveway	169+60.00	Full	360	2640	-2280	-86.36
NW 68th Ave.	174+40.00	Full (signal)	480	2640	-2160	-81.82
Bobolink Dr.	185+00.00	Full (signal)	1070	2640	-1570	-59.47
Country Club Plaza Center East Driveway	190+20.00	Full	541	2640	-2099	-79.51
NW 67th Ave.	195+99.50	Full (signal)	551	2640	-2089	-79.13
Sedano's Supermarket East Driveway	203+30.00	Full	748	2640	-1892	-71.67
Mediterranean Villas Driveway	207+80.00	Full	440	2640	-2200	-83.33
540' east of Mediterranean Villas Driveway	213+20.00	Directional (u-turn)	540	2640	-2100	-79.55
NW 62nd Ave.	221+00.00	Full (signal)	780	1320	-540	-40.91
NW 59th Ave.	226+00.00	Directional	500	2640	-2140	-81.06
500' East of NW 59th Ave.	231+00.00	Full	500	1320	-820	-62.12
Red Road/ NW 57th Ave	241+27.85	Full (signal)	1031	2640	-1609	-60.95

Table 2.3: Assessment of Existing Signal Spacing

Median Location	Station	Median Opening Type	Spacing of Opening (feet)	Standard Spacing (feet)	Variance (feet)	Variance (%)
NW 87th Ave.	78+75.25	Full (signal)	2638	2640	-2	-0.08
NW 82nd Ave.	105+13.51	Full (signal)	1567	2640	-1073	-40.64
NW 79th. Ave.	120+80.00	Full (signal)	1880	2640	-760	-28.79
West Oakmont Dr.	139+60.00	Full (signal)	500	2640	-2140	-81.06
NW 75th Pl.	144+60.00	Full (signal)	1010	2640	-1630	-61.74
NW 73rd Ave.	154+70.00	Full (signal)	1970	2640	-670	-25.38
NW 68th Ave.	174+40.00	Full (signal)	1060	2640	-1580	-59.85
Bobolink Dr.	185+00.00	Full (signal)	1100	2640	-1540	-58.33
NW 67th Ave.	195+99.50	Full (signal)	2500	2640	-140	-5.30
NW 62nd Ave.	221+00.00	Full (signal)	2027	2640	-613	-23.22
Red Road/ NW 57th Ave	241+27.85	Full (signal)	2027	2640	-613	-23.22

Table 2.4: Assessment of Existing Connections Spacing

SOUTHSIDE OF MIAMI GARDENS DRIVE					NORTHSIDE OF MIAMI GARDENS DRIVE				
Driveway	Spacing of Connection (feet)	Standard Spacing (feet)	Variance (feet)	Variance (%)	Driveway	Spacing of Connection (feet)	Standard Spacing (feet)	Variance (feet)	Variance (%)
NW 87th Ave.	-				NW 87th Ave.	-			
NW 84th Ct.	1040	245	795	324.49	Chevron Driveway	113	245	-132	-53.88
NW 82nd Ave.	1510	245	1265	516.33	Garden Square Shopping Center Driveway 1	123	245	-122	-49.80
Fire Station	2444	245	2199	897.55	Garden Square Shopping Center Driveway 2	330	245	85	34.69
Country Club Driveway 1	229	245	-16	-6.53	NW 84th Place	210	245	-35	-14.29
Country Club Driveway 2	155	245	-90	-36.73	Mother of Our Redeemer Driveway 1	215	245	-30	-12.24
Country Club Driveway 3	148	245	-97	-39.59	Mother of Our Redeemer Driveway 2	275	245	30	12.24
Gallery Streets Driveway 1	80	245	-165	-67.35	Mother of Our Redeemer Driveway 3	305	245	60	24.49
Gallery Streets Driveway 2	180	245	-65	-26.53	NW 83rd Ct.	120	245	-125	-51.02
Gallery Streets Driveway 3	172	245	-73	-29.80	NW 83rd Ave.	160	245	-85	-34.69
NW 75th Pl	220	245	-25	-10.20	Church of Jesus Christ of Latter-day Saints	225	245	-20	-8.16
Mobil Driveway	128	245	-117	-47.76	NW 82nd Ave.	200	245	-45	-18.37
IHOP Driveway	330	245	85	34.69	NW 81st Ct.	190	245	-55	-22.45
Driveway 7	137	245	-108	-44.08	NW 74th Pl.	875	245	630	257.14
NW 73rd Ave.	255	245	10	4.08	NW 79th Ave.	390	245	145	59.18
Coral Gate Apartment Driveway 1	484	245	239	97.55	House 1 driveway 1	1190	245	945	385.71
Coral Gate Apartment Driveway 2	42	245	-203	-82.86	House 1 driveway 2	30	245	-215	-87.76
Coral Gate Apartment Driveway 3	526	245	281	114.69	House 2 driveway 1	45	245	-200	-81.63
The Gate House Driveway	320	245	75	30.61	House 2 driveway 2	30	245	-215	-87.76
Sunrise Prepertyrian Church Driveway	45	245	-200	-81.63	Wentworth Dr.	123	245	-122	-49.80
NW 68th Ave.	375	245	130	53.06	W Oakmont Dr.	285	245	40	16.33
Bobolink Drive	1065	245	820	334.69	Troon Dr.	166	245	-79	-32.24
Country Club Plaza Driveway 1	117	245	-128	-52.24	House 3 Driveway	186	245	-59	-24.08
Country Club Plaza Driveway 2	320	245	75	30.61	House 4 Driveway 1	48	245	-197	-80.41
Country Club Plaza Driveway 4	137	245	-108	-44.08	House 4 Driveway 2	42	245	-203	-82.86
Country Club Plaza Driveway 5	75	245	-170	-69.39	Old Elm Dr.	460	245	215	87.76
Ludlam Rd./NW 67th Ave.	150	245	-95	-38.78	Power Plant	170	245	-75	-30.61
Vista Center Driveway 1	135	245	-110	-44.90	Driveway 1	240	245	-5	-2.04
Vista Center Driveway 2	225	245	-20	-8.16	Driveway 2	1206	245	961	392.24
Vista Center Driveway 3	270	245	25	10.20	NW 68th Ave.	620	245	375	153.06
Vista Center Driveway 4	200	245	-45	-18.37	Bobolink Dr.	1034	245	789	322.04
Mediterranean Villas Driveway	160	245	-85	-34.69	NW 67th Pl.	255	245	10	4.08
NW 62nd Ave.	1290	245	1045	426.53	Country Club Plaza North Driveway 1	54	245	-191	-77.96
NW 59th Ave.	400	245	155	63.27	Country Club Plaza North Driveway 2	88	245	-157	-64.08
Shopping Entrance Driveway 1	465	245	220	89.80	Country Club Plaza North Driveway 3	270	245	25	10.20
Shopping Entrance Driveway 2	550	245	305	124.49	NW 67th Ave.	230	245	-15	-6.12
Red Road	400	245	155	63.27	NW 62nd Ave.	2460	245	2215	904.08
					USPS Driveway	410	245	165	67.35
					Extra Space Storage Driveway	585	245	340	138.78
					Autozone Driveway	390	245	145	59.18
					Red Road	390	245	145	59.18

2.8 Intersection Inventory

Field reviews were conducted to inventory the existing intersection lane configurations and traffic controls. The inventory included all signalized intersections and other unsignalized intersections that were identified for traffic data collection in coordination with FDOT staff. The inventory of the existing intersections is summarized in Figure 2-3 on page 3-13. The lane configurations at the intersections are depicted, along with the locations that operate under signal control (11 total) and locations that are unsignalized (6 total with stop sign control on side street).

The lane configuration at all project intersections include a minimum of two eastbound through lanes and two westbound through lanes. Auxiliary through lanes and turn lanes are provided at several intersections, as noted in Figure 2-3.

The study corridor includes 11 signalized intersections and one emergency signal for fire station situated west of Wentworth Drive. Among the signalized intersections, nine (9) are supported on mast arms and two (2) are span wire mounted. The signalized intersections are listed in Table 2-5. Signal timing sheets for the signalized intersections were gathered from Miami-Dade County and provided in Appendix B.

Table 2.5: Existing Traffic Signals

Signal Location	Type of Support
NW 87th Ave.	Mast Arm
NW 82nd Ave.	Mast Arm
NW 79th. Ave.	Mast Arm
West Oakmont Dr.	Mast Arm
NW 75th Pl.	Mast Arm
NW 73rd Ave.	Mast Arm
NW 68th Ave.	Span Wire
Bobolink Dr.	Span Wire
NW 67th Ave.	Mast Arm
NW 62nd Ave.	Mast Arm
NW 57th Ave	Mast Arm

2.9 Traffic Data

Traffic counts were collected in order to establish the traffic flow characteristics for the existing year (2016) along MGD. The data collection included 72-hour continuous machine counts and seven-hour intersection turning movement counts. All counts were collected in May 2016. The turning movement counts were collected for three hours during the AM peak period (6:00 AM to 9:00 AM) and four hours in the PM peak period (3:00 PM to 7:00 PM). The traffic count sites are identified in Figure 2-2. The traffic counts collected for the project are assembled in Appendix C.

Data from the 72-hour machine counts were adjusted using seasonal correction factors (1.00) and axle correction factors (0.98) to develop existing year (2016) estimated annual average daily traffic (AADT) along each road segment. The applicable axle correction factor and seasonal correction factor were obtained from the 2015 Florida Traffic Information DVD. Table 2.6 shows a computation sheet for the AADTs that are reflected in Figure 2-3. The data indicates that the existing AADT on MGD ranges from approximately 31,400 to 45,800 vehicles per day. The most heavily used side streets are: NW 57th Avenue (46,800 AADT), NW 67th Avenue (41,900 AADT) and NW 87th Avenue (34,600 AADT).

Data gathered from the turning movement counts was used to develop system-wide AM (7:15 AM to 8:15 AM) and PM (5:30 PM– 6:30 PM) peak hour volumes for the study corridor. The system-wide peak hours were determined by evaluating the peaking characteristics of the three most heavily used intersections in the corridor, i.e., NW 87th Avenue, NW 67th Avenue and NW 57th Avenue. The peak hour volumes from the raw counts were adjusted to develop balanced traffic flows across the corridor. The resulting final balanced AM and PM peak hour volumes are depicted in Figure 2-3.

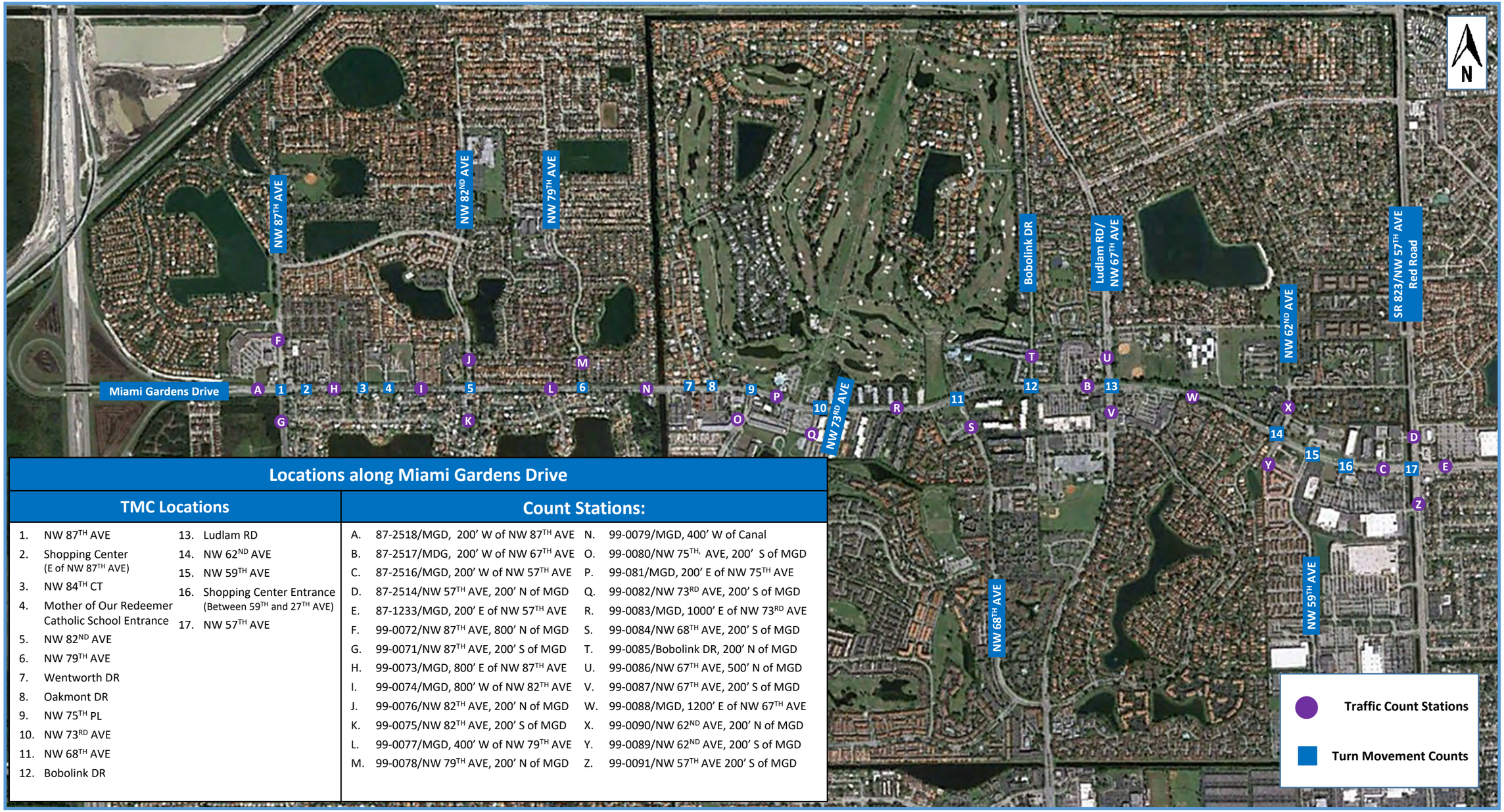

Locations along Miami Gardens Drive

TMC Locations

1. NW 87TH AVE
2. Shopping Center (E of NW 87TH AVE)
3. NW 84TH CT
4. Mother of Our Redeemer Catholic School Entrance
5. NW 82ND AVE
6. NW 79TH AVE
7. Wentworth DR
8. Oakmont DR
9. NW 75TH PL
10. NW 73RD AVE
11. NW 68TH AVE
12. Bobolink DR
13. Ludlam RD
14. NW 62ND AVE
15. NW 59TH AVE
16. Shopping Center Entrance (Between 59TH and 27TH AVE)
17. NW 57TH AVE

Count Stations:

A. 87-2518/MGD, 200' W of NW 87TH AVE
B. 87-2517/MDG, 200' W of NW 67TH AVE
C. 87-2516/MGD, 200' W of NW 57TH AVE
D. 87-2514/NW 57TH AVE, 200' N of MGD
E. 87-1233/MGD, 200' E of NW 57TH AVE
F. 99-0072/NW 87TH AVE, 800' N of MGD
G. 99-0071/NW 87TH AVE, 200' S of MGD
H. 99-0073/MGD, 800' E of NW 87TH AVE
I. 99-0074/MGD, 800' W of NW 82TH AVE
J. 99-0076/NW 82TH AVE, 200' N of MGD
K. 99-0075/NW 82TH AVE, 200' S of MGD
L. 99-0077/MGD, 400' W of NW 79TH AVE
M. 99-0078/NW 79TH AVE, 200' N of MGD
N. 99-0079/MGD, 400' W of Canal
O. 99-0080/NW 75TH, AVE, 200' S of MGD
P. 99-081/MGD, 200' E of NW 75TH AVE
Q. 99-0082/NW 73RD AVE, 200' S of MGD
R. 99-0083/MGD, 1000' E of NW 73RD AVE
S. 99-0084/NW 68TH AVE, 200' S of MGD
T. 99-0085/Bobolink DR, 200' N of MGD
U. 99-0086/NW 67TH AVE, 500' N of MGD
V. 99-0087/NW 67TH AVE, 200' S of MGD
W. 99-0088/MGD, 1200' E of NW 67TH AVE
X. 99-0090/NW 62ND AVE, 200' N of MGD
Y. 99-0089/NW 62ND AVE, 200' S of MGD
Z. 99-0091/NW 57TH AVE 200' S of MGD

FDOT

SR 860 / Miami Gardens Drive Corridor Planning Study

Traffic Data Collection Sites

Figure 2-2

Table 2.6: 2016 AADT Computation Sheet

	Count Location	3-Day ADT	Seasonal Factor	Axle Factor	AADT
Miami Gardens Drive - EB / WB	Miami Gardens Drive 200' W of NW 87th Ave	46700	1.00	0.98	45800
	Miami Gardens Drive 800' E of NW 87th Ave	32100	1.00	0.98	31400
	Miami Gardens Drive 800' W of NW 82th Ave	35300	1.00	0.98	34600
	Miami Gardens Drive 400' W of NW 79th Ave	34700	1.00	0.98	34000
	Miami Gardens Drive 400' W of Canal	36800	1.00	0.98	36100
	Miami Gardens Drive 200' E of NW 75th Place	39500	1.00	0.98	38700
	Miami Gardens Drive 100' E of NW 73rd Ave	38200	1.00	0.98	37400
	Miami Gardens Drive 200' W of NW 67th Ave	38600	1.00	0.98	37800
	Miami Gardens Drive 1000' E of NW 67th Ave	42500	1.00	0.98	41600
	Miami Gardens Drive 200' W of NW 57th Ave	37200	1.00	0.98	36500
	Miami Gardens Drive 200' E of NW 57th Ave	33000	1.00	0.98	32400
Miami Gardens Drive Cross Streets - NB / SB	NW 87th Ave 800' N of Miami Gardens Drive	20700	1.00	0.98	20300
	NW 87th Ave 200' S of Miami Gardens Drive	19900	1.00	0.98	19500
	NW 82nd Ave 200' N of Miami Gardens Drive	10800	1.00	0.98	10600
	NW 82nd Ave 200' S of Miami Gardens Drive	10600	1.00	0.98	10300
	NW 79th Ave 200' N of Miami Gardens Drive	11100	1.00	0.98	10900
	NW 75th Place 200' S of Miami Gardens Drive	12900	1.00	0.98	12600
	NW 73rd Ave 200' S of Miami Gardens Drive	7800	1.00	0.98	7600
	NW 68th Ave 200' S of Miami Gardens Drive	13300	1.00	0.98	13000
	Bob-O-Link Drive 200' N of Miami Gardens Drive	5200	1.00	0.98	5100
	NW 67th Ave 500' N of Miami Gardens Drive	39700	1.00	0.98	38900
	NW 67th Ave 200' S of Miami Gardens Drive	42700	1.00	0.98	41900
	NW 62nd Ave 200' N of Miami Gardens Drive	10000	1.00	0.98	9800
	NW 62nd Ave 200' S of Miami Gardens Drive	3500	1.00	0.98	3400
	NW 57th Ave 200' N of Miami Gardens Drive	52400	1.00	0.98	51400
	NW 57th Ave 200' S of Miami Gardens Drive	47800	1.00	0.98	46800

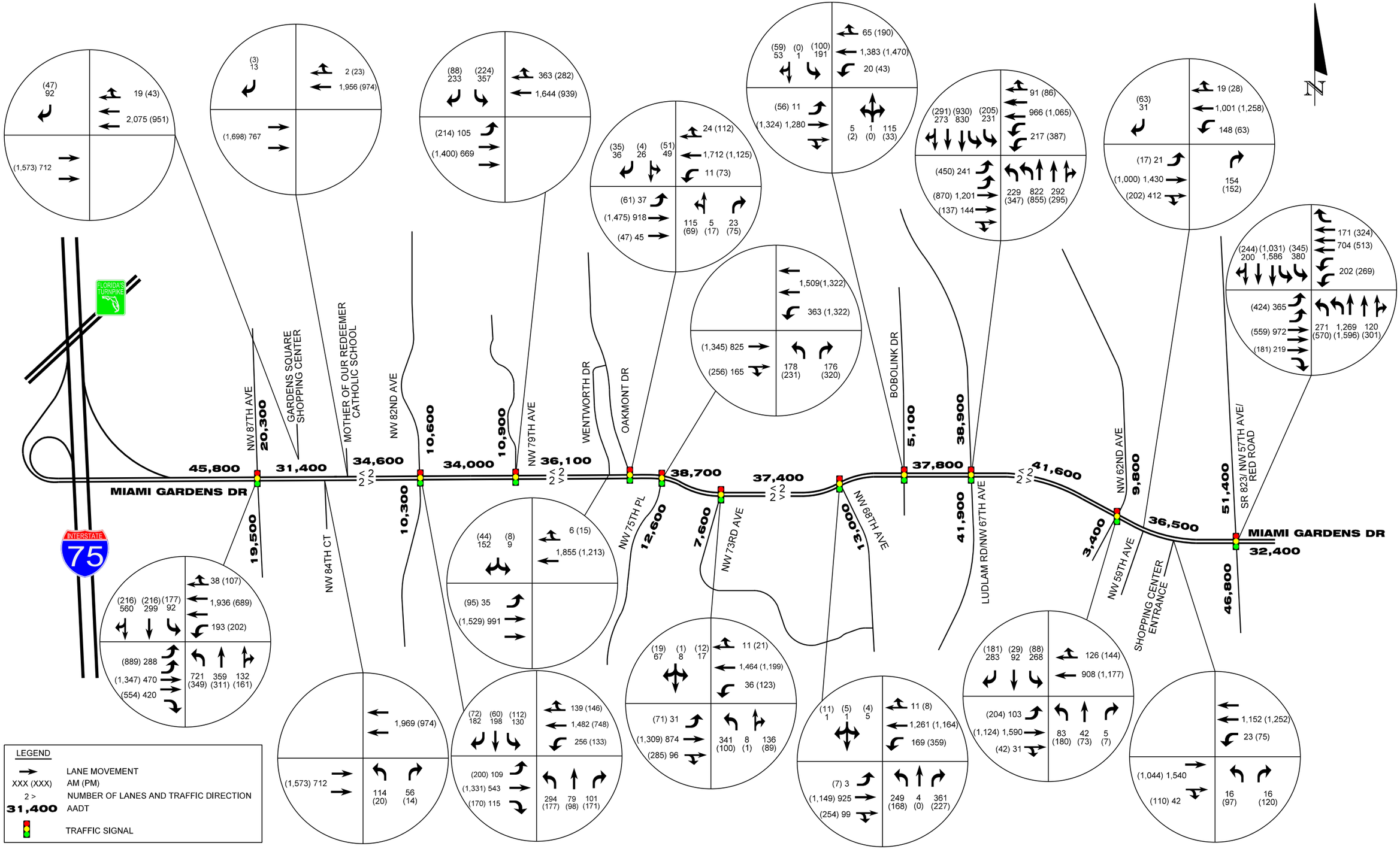

FDOT

SR 860/ Miami Garden Drive
Corridor Planning Study

Existing (2016) AADT
and Peak Hour Volumes

Figure 2-3

$USER$ $DATE$ $TIME$ $FILE$

2.10 Level of Service

Level of Service (LOS) analyses were conducted for the existing (2016) conditions for the intersections in the study network. The analyses were conducted in accordance with procedures of the Highway Capacity Manual, 2010 Edition (HCM 2010). Synchro models were developed for performing the level of service analyses of the signalized and unsignalized intersections. The road intersection geometry and peak hour traffic volumes used in the analyses are consistent with the information presented in previous sections and depicted in Figure 3-2. Signal timings used were obtained from Miami-Dade County which are compiled in Appendix B. Peak Hour Factors and percent trucks are based on the gathered traffic count data.

Detailed results from the level of service analyses are contained in Appendix D. The results are summarized in Table 2-7 and Table 2-8. The results indicate that five existing signalized intersections experience substandard (LOS E or LOS F) operating conditions during the AM and/or PM peak period. These intersections include: NW 87th Avenue, NW 73rd Avenue, NW 68th Avenue, NW 67th Avenue and NW 57th Avenue. In addition, substandard operating conditions are experienced on the approaches of five of the six unsignilazed intersections. These results suggest that during AM and PM peak periods, excessive delays are experienced at several intersections along the corridor and this is consistent with field observations.

Table 2.7: Level of Service Summary – Signalized Intersections

Intersection	Intersection Approach			Overall Intersection	
	App.	Delay (sec)	LOS	Delay (sec)	LOS
		AM (PM)	AM (PM)	AM (PM)	AM Peak
NW 87th Avenue	NB	280.7 (186.9)	F (F)	179.5 (78.0)	F (E)
	SB	365.9 (89.8)	F (F)		
	EB	80.6 (48.7)	F (D)		
	WB	92.8 (62.7)	F (E)		
NW 82nd Avenue	NB	49.1 (74.9)	D (E)	47.3 (25.3)	D (C)
	SB	66.9 (56.5)	E (E)		
	EB	32.6 (19.9)	C (B)		
	WB	47.0 (3.5)	D (A)		
NW 79th Avenue	SB	62.6 (66.9)	E (E)	30.7 (12.2)	C (B)
	EB	10.3 (1.7)	B (A)		
	WB	30.0 (11.6)	C (B)		
W Oakmont Drive	NB	149.2 (74.0)	F (E)	22.2 (13.3)	C (B)
	SB	76.2 (72.4)	E (E)		
	EB	12.1 (5.4)	B (A)		
	WB	9.8 (10.2)	A (B)		
NW 75th Place	NB	79.4 (109.8)	E (F)	14.7 (32.4)	B (C)
	EB	10.4 (21.5)	B (C)		
	WB	3.9 (12.3)	A (B)		
NW 73rd Avenue	NB	380.3 (65.4)	F (E)	80.2 (6.5)	F (A)
	SB	54.3 (60.8)	D (E)		
	EB	1.7 (1.6)	A (A)		
	WB	28.5 (1.5)	C (A)		

Table 2.7 (Continued) - Level of Service Summary - Signalized Intersections

Intersection	Intersection Approach			Overall Intersection	
	App.	Delay (sec)	LOS	Delay (sec)	LOS
		AM (PM)	AM (PM)	AM (PM)	AM Peak
NW 68th Avenue	NB	70.8 (75.1)	E (E)	24.4 (98.7)	C (F)
	SB	40.1 (52.7)	D (D)		
	EB	22.9 (2.6)	C (A)		
	WB	3.7 (194.2)	A (F)		
Bobolink Drive	NB	43.6 (62.8)	D (E)	22.5 (9.8)	C (A)
	SB	52.8 (67.5)	D (E)		
	EB	2.7 (0.8)	A (A)		
	WB	33.5 (9.4)	C (A)		
Ludlam Road/NW 67th Avenue	NB	46.8 (48.1)	D (D)	82.9 (63.6)	F (E)
	SB	47.2 (46.8)	D (D)		
	EB	142.4 (65.3)	F (E)		
	WB	82.0 (92.1)	F (F)		
NW 62nd Avenue	NB	65.1 (147.3)	E (F)	49.8 (38.1)	D (D)
	SB	178.5 (97.1)	F (F)		
	EB	19.2 (15.9)	B (B)		
	WB	19.8 (23.9)	B (C)		
Red Road/NW 57th Avenue	NB	51.0 (75.8)	D (E)	54.7 (74.3)	E (E)
	SB	52.1 (61.7)	D (E)		
	EB	71.9 (80.7)	E (F)		
	WB	71.0 (83.0)	E (F)		

Table 2.8: Level of Service Summary – Unsignalized Intersections

Intersection	Lane Group	Delay		LOS	
		AM Peak	PM Peak	AM Peak	PM Peak
Shopping Center Entrance (East)	EB	0.0	0.0	A	A
	WB	0.0	0.0	A	A
	SB	53.8	14.9	F	B
NW 84th Ct	EB	0.0	0.0	A	A
	WB	0.0	0.0	A	A
	NB	371.7	166.8	F	F
Mother of our Redeemer Catholic School	EB	0.0	0.0	A	A
	WB	0.0	0.0	A	A
	SB	22.6	12.5	C	B
Wentworth Drive	EB	0.7	0.8	A	A
	WB	0.0	0.0	A	A
	SB	244.0	64.3	F	F
NW 59th Avenue	EB	0.1	0.2	A	A
	WB	4.2	0.6	A	A
	NB	48.1	19.6	E	C
	SB	13.1	16.5	B	C
Shopping Center Entrance (West)	EB	0.0	0.0	A	A
	WB	0.3	0.7	A	A
	NB	144.1	407.9	F	F

2.11 Transit Assets and Service Routes

Figure 2-4 displays the existing transit services within the project vicinity. MGD is serviced by seven (7) bus routes operated by Miami-Dade County. Route maps for these services are provided in Appendix E. Included among these is the 95 Express Golden Glades bus service. This express bus provides service during weekday peak periods with headways ranging from approximately 30 minutes to 50 minutes. Other routes serving the corridor include: Route 54; Route 183; Route 267; Route 73; Route 99 and Route 286. These bus routes provide services with headways ranging from approximately 10 minutes to 30 minutes during weekday peak periods.

The MGD bus routes are supported by 27 bus stops (14 westbound and 13 eastbound) spaced at approximately 1,200 feet. Twenty-one (21) of the bus stops are fully equipped with shelters, benches and schedules, while six (6) bus stops are equipped with benches only. A park-and-ride lot is located on the southwest corner of MGD and NW 73rd Street. The park-and-ride lot provides 136 spaces. Ridership data from Miami-Dade County indicate that the NW 73rd Street Park-and-Ride Lot is underutilized with an average monthly occupancy of only 9% (see Patronage Summary in Table 2.9).

Table 2.9: NW 73rd Street Park & Ride Lot – Patronage Summary

Month	Actual Available Spaces	Actual Occupancy	Percent Occupancy
January, 2016	136	12	9%
February, 2016	136	16	12%
March, 2016	136	15	11%
April, 2016	136	14	10%
May, 2016	136	9	7%
June, 2016	136	8	6%
January - June, 2016	**136**	**12**	**9%**

Source: Miami-Dade County, Ridership Technical Report

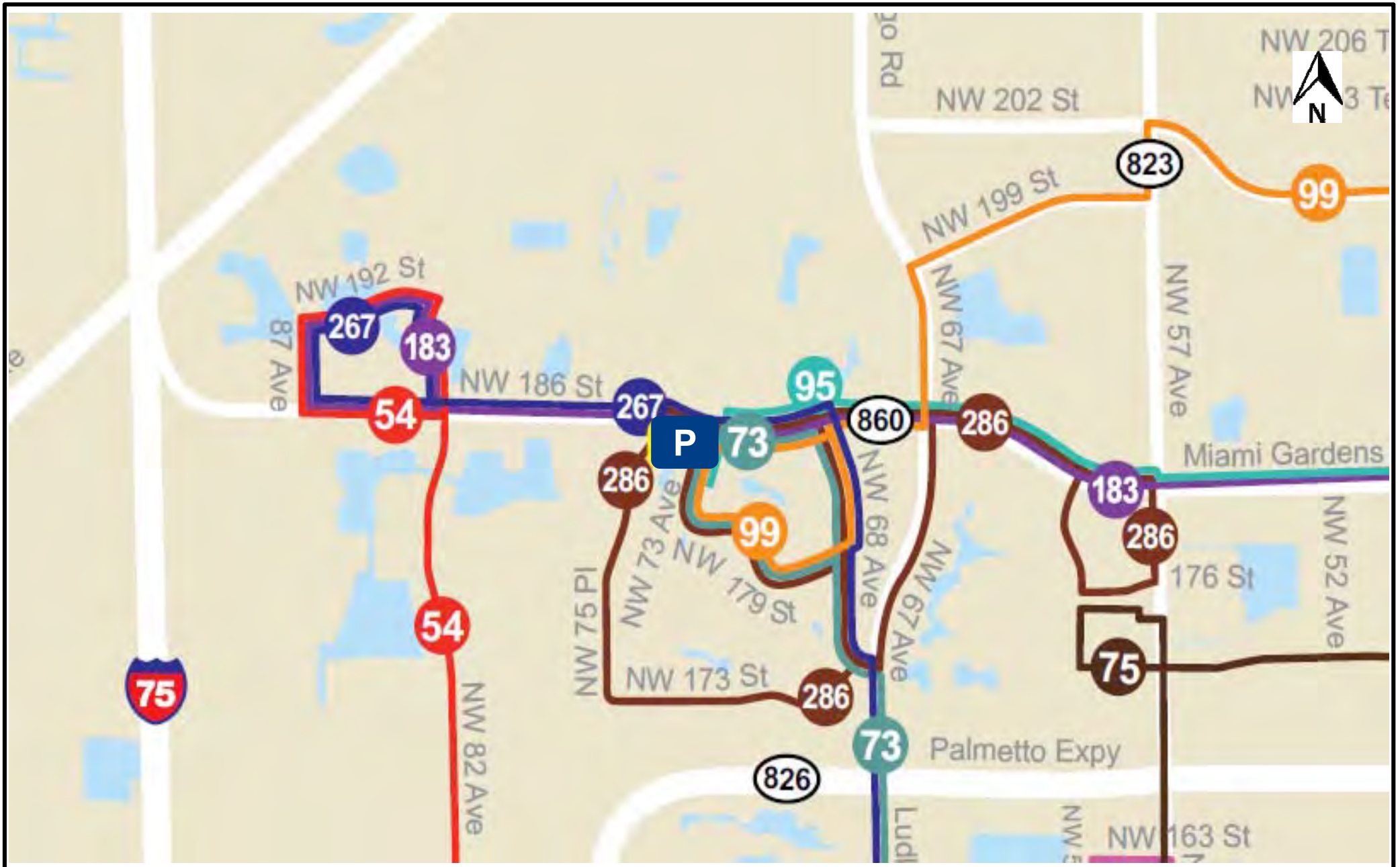

FDOT SR 860 / Miami Gardens Drive Corridor Planning Study	Existing Transit Routes	Figure 2-4

2.12 Crash Analysis

The FDOT Crash Analysis Reporting System (CARS) was used to gather historical crash records for the MGD corridor. CARS is a database maintained annually by the FDOT for crashes reported along state highway facilities. The database provides information on various characteristics associated with each crash including: collision type, severity, weather conditions, road surface conditions and date/time information. The CARS database was researched to identify and extract crashes reported along the study corridor during the period from January 2011 through December 2015. The crashes were analyzed to make an assessment of safety conditions along the study corridor. Results from this safety analysis are discussed below.

Table 2-10 provides a summary of the crashes reported along the study corridor. Figure 2-6 depicts the distribution of crashes along the network. The summary table shows that a total of 1,181 crashes were reported along MGD during the five-year period – which equates to an average of 236 crashes per year. These crashes resulted in four fatalities and 443 injury crashes. Rear-end collisions were the most common crash type, accounting for approximately 48.4% of all reported crashes. Angle collisions are the second most common crash type with approximately 17.5% of all crashes and sideswipe collisions are the third most common with 10.3% of all crashes. The crash distribution chart (Figure 2-5) indicates that several crashes are concentrated at the more heavily used intersections including: NW 57th Avenue, NW 67th Avenue and NW 87th Avenue.

The high percentage of rear-end and sideswipe collisions along the corridor are typical for roadway conditions where traffic congestion is a probable contributing cause. Issues related to inadequate geometry at driveways to gated communities may also be a contributing cause to rear-end collisions. Several gated communities have very short inbound driveway storage areas that can accommodate only one or two vehicles. This limited driveway storage frequently results in vehicles spilling back onto MGD while security guards process drivers to enter the communities.

Angle collisions experienced along MGD may be due in part to inadequate access control, given the large number of median openings with substandard spacing along the corridor. As

previously discussed under Section 2.4, the study corridor has 28 existing median openings and all have substandard spacing.

Crashes experienced along the corridor were further analyzed to identify any abnormally high crash locations. The analysis was performed using the FDOT's screening tools for high crash spots/segments with rankings based on computed confidence levels for abnormally high crash rates. This screening procedure identifies locations along the study corridor where the historical crash rates are abnormally high when compared to similar locations statewide. Based on this analysis the crashes experienced at the following intersections were determined to be abnormally high:

- NW 67th Avenue: 2013 and 2014
- NW 62nd Avenue: 2012 and 2014

The FDOT estimates that the total economic loss resulting from each crash on an urban arterial with four travel lanes is approximately $152,103 per crash. The annual economic loss resulting from crashes along MGD may therefore be estimated to be approximately $35.9 million ($152,103 per crash times 236 crashes per year).

Table 2.10: Corridor Crash Statistics

SR 860 / Miami Gardens Drive from East of I-75 to NW 57 Avenue		Number of Crashes					5 Year Total Crashes	Mean Crashes Per Year	%
		Year							
		2011	2012	2013	2014	2015			
CRASH TYPE	Rear End	115	100	128	154	75	572	114	48.4%
	Head On	0	1	1	0	0	2	0	0.2%
	Angle	29	34	46	64	34	207	41	17.5%
	Left Turn	16	16	24	31	8	95	19	8.0%
	Right Turn	3	4	3	4	2	16	3	1.4%
	Sideswipe	23	24	26	32	17	122	24	10.3%
	Backed Into	0	0	0	0	0	0	0	0.0%
	Pedestrian	6	5	4	4	0	19	4	1.6%
	Bicycle	3	0	5	3	0	11	2	0.9%
	Fixed Object	*13*	*10*	*6*	*15*	*11*	*55*	*11*	*4.7%*
	Other Non Fixed Object Collisions	*3*	*0*	*3*	*1*	*4*	*11*	*2*	*0.9%*
	Non-Collisions	*2*	*1*	*1*	*3*	*0*	*7*	*1*	*0.6%*
	Others	9	11	19	18	7	64	13	5.4%
	Total Crashes	**222**	**206**	**266**	**329**	**158**	**1181**	**236**	**100.0%**
SEVERITY	PDO Crashes	120	104	167	232	111	734	147	62.2%
	Fatal Crashes	1	1	0	1	1	4	1	0.3%
	Injury Crashes	101	101	99	96	46	443	89	37.5%
LIGHTING CONDITIONS	Daylight	137	133	181	230	109	790	158	66.9%
	Dusk	7	9	8	8	7	39	8	3.3%
	Dawn	4	4	2	6	1	17	3	1.4%
	Dark	72	60	74	85	41	332	66	28.1%
	Unknown	2	0	1	0	0	3	1	0.3%
SURFACE CONDITIONS	Dry	195	167	228	265	145	1000	200	84.7%
	Wet	25	38	37	64	13	177	35	15.0%
	Others	2	1	1	0	0	4	1	0.3%
WEATHER CONDITIONS	Clear	172	154	190	238	130	884	177	74.9%
	Cloudy	39	29	51	61	21	201	40	17.0%
	Rain	10	23	24	29	7	93	19	7.9%
	Fog, Smog, Smoke	0	0	0	1	0	1	0	0.1%
	Sleet/Hail/Freezing Rain	0	0	0	0	0	0	0	0.0%
	Blowing Sand, Soil, Dirt	0	0	0	0	0	0	0	0.0%
	Severe Crosswinds	0	0	0	0	0	0	0	0.0%
	Other	1	0	1	0	0	2	0	0.2%

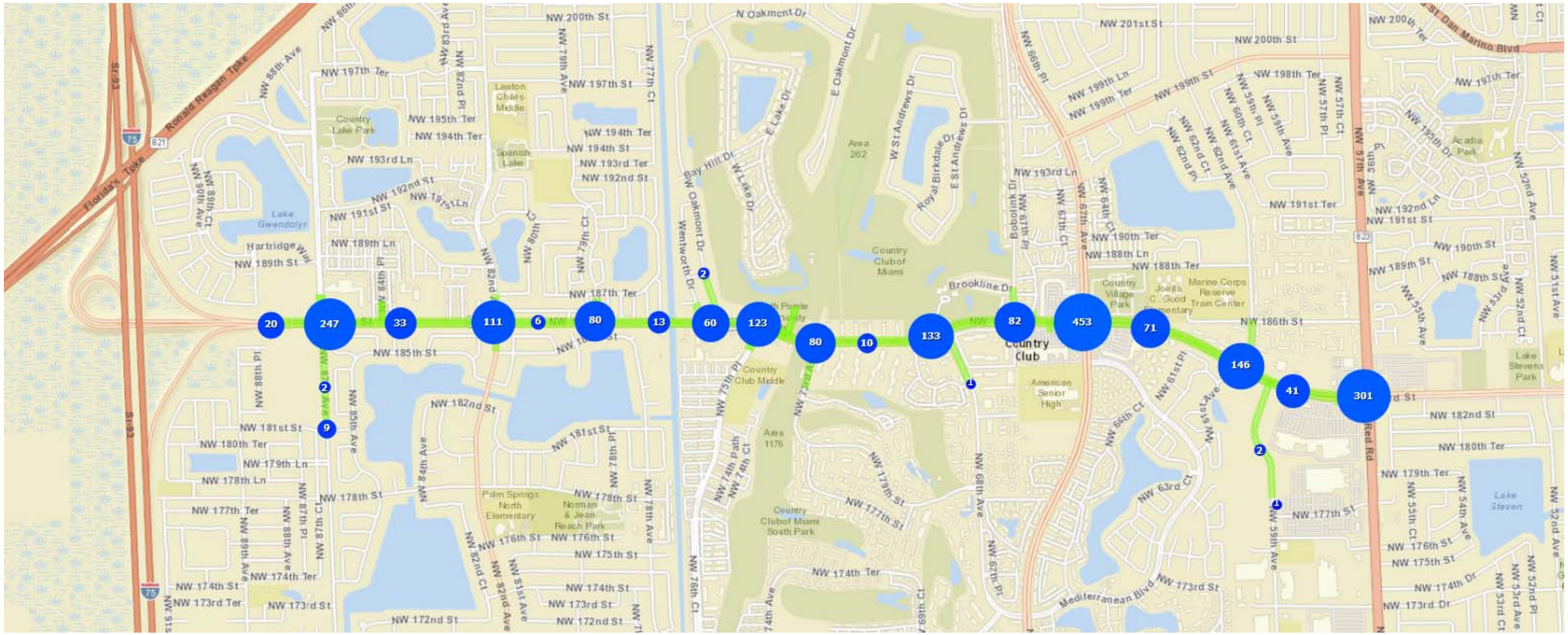
20
247
33
111
6
80
13
60
123
80
10
133
1
82
453
71
146
41
301
2
9
2
2
1
Florida's Turnpike
Ronald Reagan Tpke
NW 200th St
NW 197th Ter
NW 197th St
NW 195th Ter
NW 194th Ter
NW 194th St
NW 193rd Ln
NW 193rd Ter
NW 192nd St
NW 191st St
NW 189th Ln
NW 189th St
NW 187th Ter
NW 185th St
NW 182nd St
NW 181st St
NW 180th Ter
NW 179th Ln
NW 178th Ln
NW 178th St
NW 177th Ter
NW 176th St
NW 175th St
NW 174th Ter
NW 174th St
NW 173rd Ter
NW 173rd St
NW 172nd St
N Oakmont Dr
E Oakmont Dr
E Lake Dr
W Lake Dr
Bay Hill Dr
W St Andrews Dr
Royal Birkdale Dr
E St Andrews Dr
Wentworth Dr
Brookline Dr
Country Club of Miami
Area 262
Country Club Middle
Area 1176
Country Club of Miami South Park
Lawton Chiles Middle
Spanish Lake
Lake Gwendolyn
Country Lake Park
Palm Springs North Elementary
Norman & Jean Reach Park
Country Village Park
Joella C. Good Elementary
Marine Corps Reserve Train Center
American Senior High
Acadia Park
Lake Stevens Park
Lake Steven
NW 201st St
NW 200th St
NW 200th Ter
NW 199th Ln
NW 199th Ter
NW 199th St
NW 198th Ter
NW 197th Ter
NW 195th Ter
NW 192nd Ln
NW 191st St
NW 191st Ter
NW 190th St
NW 190th Ter
NW 189th St
NW 188th Ln
NW 188th Ter
NW 188th St
NW 186th St
NW 182nd St
NW 180th Ter
NW 179th Ter
NW 177th St
NW 176th St
NW 175th St
NW 174th Dr
NW 173rd Dr
NW 173rd St
Mediterranean Blvd
St Dan Marino Blvd
Red Rd
NW 57th Ave
NW 59th Ave
NW 62nd Ave
NW 67th Ave
NW 68th Ave
NW 74th Ave
NW 79th Ave
NW 82nd Ave
NW 84th Ave
NW 87th Ave
NW 89th Ave
NW 89th Ct
NW 85th Ave
NW 83rd Ave
NW 82nd Pl
NW 86th Ave
NW 88th Ave
NW 88th Pl
NW 87th Pl
NW 87th Ct
NW 80th Ct
NW 79th Ct
NW 78th Ct
NW 77th Ct
NW 76th Ave
NW 74th Path
NW 74th Ct
NW 73rd Ave
NW 75th Pl
NW 78th Pl
NW 82nd Ct
NW 81st Ave
NW 81st Pl
NW 84th Pl
NW 66th Pl
NW 67th Ct
NW 64th Ct
NW 63rd Ct
NW 62nd Ct
NW 62nd Pl
NW 61st Ave
NW 61st Pl
NW 59th Pl
NW 59th Ct
NW 57th Pl
NW 57th Ct
NW 55th Ave
NW 55th Ct
NW 54th Ave
NW 53rd Ave
NW 53rd Ct
NW 52nd Ave
NW 52nd Pl
NW 51st Ave
NW 51st Pl
NW 66th Ct
NW 63rd Ct
NW 61st Pl
NW 61st Ave
NW 59th Ave
NW 55th Pl
NW 55th Ct
NW 54th Ave
NW 53rd Ave
NW 53rd Ct
NW 52nd Pl
NW 52nd Ave
NW 51st Ave
NW 35th Ave
NW 33rd Ave
NW 32nd Ave
NW 31st Ave
NW 27th Ave
NW 22nd Ave
NW 17th Ave
NW 12th Ave
NW 7th Ave
NW 2nd Ave
NW 1st Ave
NW 91st Ave
NW 91st Ct
NW 89th Ave
NW 88th Ave
NW 87th Ave
NW 84th Ave
NW 82nd Ave
NW 81st Ave
NW 79th Ave
NW 76th Ave
NW 74th Ave
NW 73rd Ave
NW 68th Ave
NW 67th Ave
NW 62nd Ave
NW 59th Ave
NW 57th Ave
NW 55th Ave
NW 54th Ave
NW 53rd Ave
NW 52nd Ave
NW 51st Ave
NW 35th Ave
NW 33rd Ave
NW 32nd

3.0 Conclusions

Field reviews, investigations, research and analyses were performed to gather data and document the existing year (2016) conditions along the Miami Gardens Drive study corridor. The study corridor extends along MGD from approximately 770 feet west of NW 87th Avenue to NW 57th Avenue/Red Road – a distance of approximately 3.2 miles. The corridor consists of four lanes (2 EB + 2 WB) with widening at intersections to incorporate auxiliary through lanes and turn lanes. The posted speed limit is 40 mph. The following are key findings from the existing conditions work effort:

1. The dominant land uses within the corridor are residential (41%); transportation (20%) and recreational (10%). Approximately 55% of the existing land uses are classified as noise sensitive sites.
2. The existing right-of-way on MGD varies from 105 feet to 123 feet. Typical section includes four 12-foot lanes, a 19-foot raised median, 3-foot valley gutters, grass swales (that vary from 9.5 feet to 14.5 feet) and sidewalks (that vary between 5 feet and 7 feet wide). No designated bike facilities are provided along MGD.
3. Existing drainage consists of two systems. System A extends from NW 87th Avenue to Peters Pike Canal, while System B extends from Peters Pike Canal to NW 57th Avenue. Roadway runoff from Systems A and B is collected along the valley gutters on either side of the road and conveyed to Ditch Bottom Inlets (DBI) or Type 5 and Type 6 curb inlets with paved flumes.
4. Street lighting is provided throughout the corridor consisting of 400 Watt high pressure sodium vapor luminaries with self-contained 480 volts regular type ballast mounted on aluminum poles.
5. Twenty-eight (27) median openings are provided along the corridor. This includes 11 signalized intersections and one emergency fire station signal. All median openings have substandard spacing, and in most cases (24 of 27), the variance is more than 50% below the spacing standard for this designated Access Class 3 facility.
6. The existing AADT along MGD varies from approximately 31,400 to 45,800 vehicles per day. Peak traffic volumes are experienced during the morning between 7:15 AM and 8:15 AM and during the afternoon between 5:30 PM and 6:30 PM. Intersections

with the highest travel demand are NW 57th Avenue, NW 67th Avenue and NW 87th Avenue.

7. Existing level of service is substandard (LOS E or F) at all signalized intersections during the AM and/or PM perk periods. Levels of service were also found to be substandard on the side street approaches of five of the six unsignalized intersections that were analyzed.
8. Existing transit includes seven Metrobus service routes operated by Miami-Dade County. Among these is the 95 Express Golden Glades bus which provides service during weekday peak periods. Transit services are supported by bus stops (spaced at approximately 1,200 feet) and a park-and-ride facility (with a parking supply of 136 spaces) at NW 73rd Street. The park-and-ride facility is currently underutilized with an average occupancy of approximately 9%.
9. During the 5-year period from 2011 through 2015, 1,181 crashes were reported along the study corridor. These included four fatal crashes and 443 injury crashes. The predominant crash types were rear-end collisions (48.4%); angle collisions (17.5%) and side swipes (10.3%). Probable causal factors for these crashes include excessive traffic congestion and inadequate access control. The intersections at NW 67th Avenue and NW 62nd Avenue were identified as high crash locations in multiple years.
10. The corridor is frequented by pedestrians and bicyclists. Pedestrians and bicyclists share the existing sidewalk space as there are no dedicated bike lanes on the corridor.

The findings from the existing conditions review support the need for improvements on MGD. The need for improvements include: congestion relief and travel demand, safety, and socio-economic demands.

APPENDIX A

Existing Roadway Plans

(Under Separate Cover)

APPENDIX B

Signal Timing Sheets

SIGNAL HEAD DETAILS

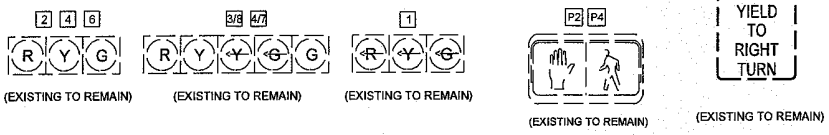

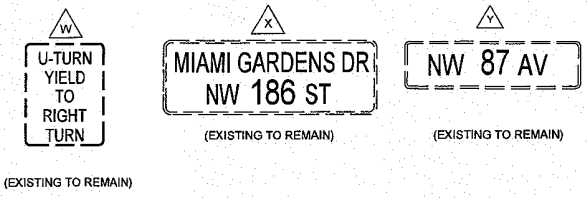

CONTROLLER OPERATIONS

1. MAJOR STREET IS SR-860 / MIAMI GARDENS DR
   MINOR STREET IS NW 87 AVE.
2. FLASHING OPERATION TO BE:
   YELLOW: ON MIAMI GARDENS DR.
   RED: EBLT ON MIAMI GARDENS DR.
   RED: ON NW 87 AVE.
3. SOP-10 MODIFIED
4. PED. SIGNALS UPON ACTUATION ONLY.

DETECTORS FOR LOOPS		
LOOPS	NO. OF LOOPS	NO. OF DETS.
L-1	2	1
L-3	1	1
L-4	1	1
L-5	1	1
L-7	1	1
L-8	2	1

REMOVAL ITEMS

690-10 1 EA

SIGNALIZATION NOTES

1. THE CONTRACTOR SHALL PERFORM AN INVENTORY OF THE EXISTING INTERSECTIONS PRIOR TO THE BEGINNING CONSTRUCTION ACTIVITIES. A WRITTEN REPORT WILL BE PREPARED LISTING ALL SIGNAL ITEMS OPERABLE AND INOPERABLE. THE COMPLETED REPORT WILL BE FORWARDED TO THE PROJECT ENGINEER WITH COPIES TO THE MAINTAINING AGENCY PRIOR TO BEGINNING CONSTRUCTION.

2. GOVERNING STANDARDS AND SPECIFICATIONS ARE: THE DESIGN STANDARDS OF 2004, THE FLORIDA DEPARTMENT OF TRANSPORTATION STANDARD SPECIFICATION FOR ROAD AND BRIDGE CONSTRUCTION AND THE MIAMI-DADE COUNTY TECHNICAL SPECIAL PROVISIONS FOR TRAFFIC SIGNALS.

3. THE SIGNAL-MAINTAINING AGENCY IS: MIAMI DADE COUNTY PUBLIC WORKS DEPARTMENT TRAFFIC SIGNAL & SIGNS DIVISION.

4. TWO FULL BUSINESS DAYS PRIOR TO DIGGING THE CONTRACTOR SHALL CALL SUNSHINE STATE ONE CALL OF FLORIDA, TELEPHONE NUMBER 1-800-432-4770, AND THE UTILITY OWNER AND REQUEST UTILITY LOCATIONS. A CONTRACTOR'S REPRESENTATIVE MUST BE PRESENT DURING UTILITY COMPANY LOCATIONS OF THEIR FACILITIES.

5. THE CONTRACTOR RESPONSE TIME TO ALL REPORTED MALFUNCTIONS OF TRAFFIC SIGNAL WITHIN THE PROJECT LIMITS SHALL BE NO MORE THAN TWO(2) HOURS, AND SHALL RESTORE ALL MALFUNCTIONING TRAFFIC SIGNAL EQUIPMENT TO ITS LEVEL OF OPERATION PRIOR TO MALFUNCTION WITHIN TWENTY-FOUR(24) HOURS. DURING THIS TIME THE CONTRACTOR SHALL PROVIDE,AT HIS EXPENSE,TEMPORARY TRAFFIC CONTROL DEVICES, FLAGMAN PERSONNEL,AND LAW ENFORCEMENT PERSONNEL AS NECESSARY TO MAINTAIN A SAFE AND EFFICIENT FLOW OF TRAFFIC AT THE AFFECTED SIGNALIZED INTERSECTIONS. THIS WOULD INCLUDE EXCEPTION AREAS THAT NEED TO BE ADJUSTED FOR M.O.T. PHASING.THE ENGINEER SHALL APPROVE ALL MODIFICATIONS PRIOR TO THEIR IMPLEMENTATION.

6. THE CONTRACTOR SHALL NOTIFY THE MAINTAINING AGENCY AT LEAST FORTY-EIGHT(48) HOURS IN ADVANCE OF ANY WORK TO BE CARRIED OUT AT ANY SIGNAL RELATED INSTALLATION.

7. THE CONTRACTOR WILL PROVIDE TWO (2) SETS OF AS-BUILT DRAWINGS AT THE TIME OF INSPECTIONS.

8. ALL SALVAGEABLE SIGNAL EQUIPMENT THAT ARE REMOVED MUST BE DELIVERED AND UNLOADED AT THE, MIAMI-DADE COUNTY TRAFFIC SIGNALS & SIGNS DIVISION
7100 N.W. 36TH STREET MIAMI, FLORIDA 33166
RECEIPTS MUST BE OBTAINED FROM THE ABOVE AGENCY AND SUBMITTED TO THE PROJECT ENGINEER TO RECEIVE PAYMENT FOR REMOVAL ITEMS.

9. SIGNAL EQUIPMENT CONSIDERED SALVAGEABLE IS AS FOLLOWS:CONTROLLERS,CONTROLLER CABINETS, CONTROLLER HARDWARE AND SOFTWARE, FLASHERS, COMMUNICATION DEVICES AND HARDWARE, SIGNAL HEADS, MAST-ARM POLES AND ASSOCIATED HARDWARE. ALL OTHER EQUIPMENT SHALL BE DISPOSED OF AT THE CONTRACTOR'S EXPENSE.

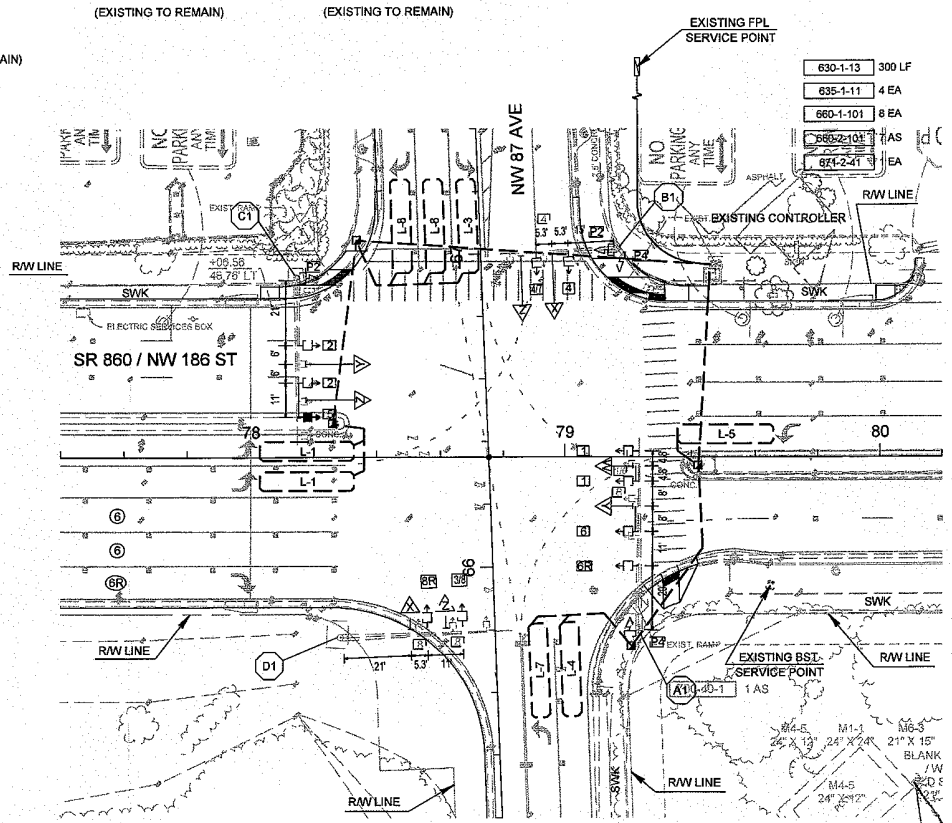

SIGNAL OPERATING PLAN

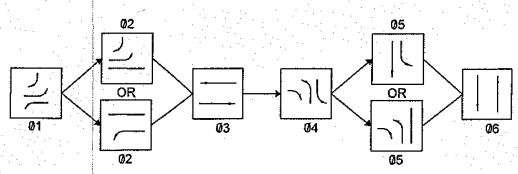

INTERSECTION ID NO. 5107

REVISIONS					
DATE	BY	DESCRIPTION	DATE	BY	DESCRIPTION

CH PEREZ & ASSOCIATES
CONSULTING ENGINEERS, INC.
9594 NW 41 STREET, SUITE 201
MIAMI, FLORIDA 33178
(305) 592-1070 | FAX: (305) 592-1078
CERTIFICATE OF AUTHORIZATION NO. EB-25976
CARLOS H. PEREZ, P.E. / LICENSE NO. 52080

STATE OF FLORIDA
DEPARTMENT OF TRANSPORTATION

ROAD NO.	COUNTY	FINANCIAL PROJECT ID
SR-860	MIAMI-DADE	250629-1-32-03

SIGNALIZATION PLAN / SIGNALIZATION NOTES NW 186 ST AND NW 87 AVE

SHEET NO. 3

TOD Schedule Report
for 5107: Miami Gardens Dr&NW 87 Av

Print Date: 10/11/2016

Print Time 4:57 PM

Asset	Intersection	TOD Schedule	Op Mode	Plan #	Cycle	Offset	TOD Setting	Active PhaseBank	Active Maximum
5107	Miami Gardens Dr&NW 87 Av	DOW-3	TOD	[06] MID-MORNING	180	78	N/A	1	Max 2

Splits

PH 1	PH 2	PH 3	PH 4	PH 5	PH 6	PH 7	PH 8
EBL	WBT	SBL	NBT	WBL	EBT	NBL	SBT
44	55	10	45	23	76	17	38

Active Phase Bank: Phase Bank 1

Phase	Walk (Phase Bank 1 - 2 - 3)	Don't Walk (1 - 2 - 3)	Min Initial (1 - 2 - 3)	Veh Ext (1 - 2 - 3)	Max Limit (1 - 2 - 3)	Max 2 (1 - 2 - 3)	Yellow	Red
1 EBL	0 - 0 - 0	0 - 0 - 0	5 - 5 - 5	3 - 3 - 3	7 - 15 - 15	45 - 25 - 25	4.4	2
2 WBT	7 - 7 - 7	18 - 18 - 18	7 - 7 - 7	1 - 1 - 1	58 - 45 - 45	0 - 45 - 45	4.4	2
3 SBL	0 - 0 - 0	0 - 0 - 0	5 - 5 - 5	2 - 2 - 2	5 - 15 - 15	22 - 20 - 20	4	2.9
4 NBT	7 - 7 - 7	20 - 20 - 20	7 - 7 - 7	2.5 -2.5 - 2.5	40 - 30 - 30	65 - 45 - 45	4	2.9
5 WBL	0 - 0 - 0	0 - 0 - 0	5 - 5 - 5	2 - 2 - 2	15 - 15 - 15	45 - 25 - 25	4.4	2
6 EBT	7 - 7 - 7	18 - 18 - 18	7 - 7 - 7	1 - 1 - 1	58 - 45 - 45	0 - 45 - 45	4.4	2
7 NBL	0 - 0 - 0	0 - 0 - 0	5 - 5 - 5	2 - 2 - 2	12 - 15 - 15	40 - 20 - 20	4	2.9
8 SBT	0 - 0 - 0	0 - 0 - 0	7 - 7 - 7	2.5 -2.5 - 2.5	40 - 30 - 30	65 - 45 - 45	4	2.9

Last In Service Date: unknown

Permitted Phases

	12345678
Default	12345678
External Permit 0	--------
External Permit 1	12-456-8
External Permit 2	12-456-8

TOD Schedule Report
for 5107: Miami Gardens Dr&NW 87 Av

Print Date: 10/11/2016

Print Time 4:57 PM

Current TOD Schedule	Plan	Cycle	Green Time 1 EBL	2 WBT	3 SBL	4 NBT	5 WBL	6 EBT	7 NBL	8 SBT	Ring Offset	Offset
	Free											
0600	2	180	13	68	17	56	23	58	39	34	0	140
1000	4	120	10	39	10	35	10	39	14	31	0	36
1330	9	180	26	61	9	58	20	67	30	37	0	132
1545	6	180	44	55	10	45	23	76	17	38	0	78
1930	7	130	13	56	8	27	13	56	8	27	0	32
2200	Free											
	1	130	9	56	4	35	9	56	0	46	0	28
	3	100	9	40	4	21	9	40	6	19	0	54
	5	100	11	38	6	19	11	38	6	19	0	0
	18	110	9	36	6	33	13	32	6	33	0	88
	19	130	19	48	8	29	19	48	15	22	0	40
	20	120	14	47	6	27	19	42	6	27	0	42

Local TOD Schedule

Time	Plan	DOW
0000	Free	Su M T W Th F S
0600	2	M T W Th F
0700	18	Su S
1000	19	Su S
1000	4	M T W Th F
1330	9	M T W Th F
1545	6	M T W Th F
1900	20	Su S
1930	7	M T W Th F
2200	Free	M T W Th F

Current Time of Day Function

Time	Function	Settings *	Day of Week
0000	TOD OUTPUTS	--------	SuM T W ThF S
0645	VEH MAX RECALL	8---4---	M T W ThF
0700	VEH MAX RECALL	-7------	M T W ThF
0830	VEH MAX RECALL	--------	M T W ThF
0930	VEH MAX RECALL	--------	M T W ThF

Local Time of Day Function

Time	Function	Settings *	Day of Week
0000	TOD OUTPUTS	--------	SuM T W ThF S
0645	VEH MAX RECALL	8---4---	M T W ThF
0700	VEH MAX RECALL	-7------	M T W ThF
0830	VEH MAX RECALL	--------	M T W ThF
0930	VEH MAX RECALL	--------	M T W ThF

* Settings

Blank - FREE - Phase Bank 1, Max 1
Blank - Plan - Phase Bank 1, Max 2
1 - Phase Bank 2, Max 1
2 - Phase Bank 2, Max 2
3 - Phase Bank 3, Max 1
4 - Phase Bank 3, Max 2
5 - EXTERNAL PERMIT 1
6 - EXTERNAL PERMIT 2
7 - X-PED OMIT
8 - TBA

No Calendar Defined/Enabled

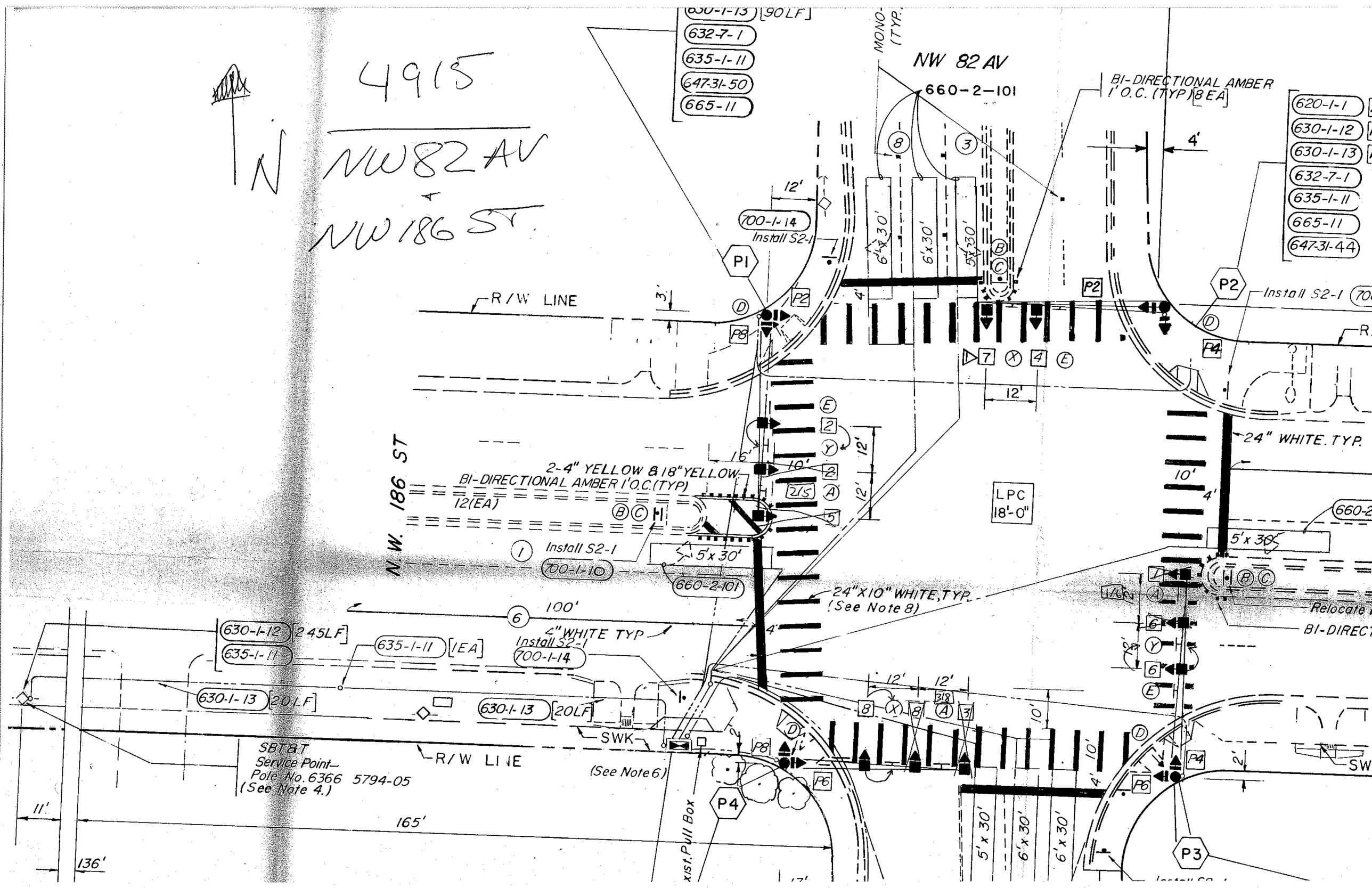

4915
NW82AV
&
NW186ST
N
NW 82 AV
660-2-101
BI-DIRECTIONAL AMBER 1' O.C. (TYP) [8 EA]
630-1-13 [90LF]
632-7-1
635-1-11
647-31-50
665-11
620-1-1
630-1-12
630-1-13
632-7-1
635-1-11
665-11
647-31-44
700-1-14
Install S2-1
P1
P2
P4
P8
P6
P3
R/W LINE
N.W. 186 ST
2-4" YELLOW & 18" YELLOW
BI-DIRECTIONAL AMBER 1' O.C. (TYP)
12(EA)
Install S2-1
700-1-10
660-2-101
5'x 30'
6'x 30'
24" WHITE. TYP.
LPC 18'-0"
24"X10" WHITE, TYP.
(See Note 8)
100'
4" WHITE TYP
630-1-12 [245LF]
635-1-11
635-1-11 [1EA]
Install S2-1
700-1-14
630-1-13 [20LF]
630-1-13 [20LF]
SWK
SBT&T
Service Point
Pole No. 6366 5794-05
(See Note 4.)
R/W LINE
(See Note 6)
Exist. Pull Box
165'
136'
11'
Relocate
BI-DIRECT

TOD Schedule Report

for 4915: Miami Gardens Dr&NW 82 Av

Print Date: 8/26/2013

Print Time: 8:58 AM

Asset	Intersection	TOD Schedule	Op Mode	Plan #	Cycle	Offset	TOD Setting	Active PhaseBank	Active Maximum
4915	Miami Gardens Dr&NW 82 Av	DOW-2		N/A	0	0	N/A	0	Max 0

Splits

PH 1	PH 2	PH 3	PH 4	PH 5	PH 6	PH 7	PH 8
EBL	WBT	SBL	NBT	WBL	EBT	NBL	SBT
0	0	0	0	0	0	0	0

Active Phase Bank: Phase Bank 1

Phase	Walk	Don't Walk	Min Initial	Veh Ext	Max Limit	Max 2	Yellow	Red
	Phase Bank 1 2 3	1 2 3	1 2 3	1 2 3	1 2 3	1 2 3		
1 EBL	0 - 0 - 0	0 - 0 - 0	5 - 5 - 5	2 - 2 - 2	7 - 7 - 7	15 - 15 - 15	3	0
2 WBT	7 - 0 - 7	12 - 0 - 12	7 - 16 - 7	1 - 1 - 1	45 - 45 - 45	0 - 45 - 45	4	1
3 SBL	0 - 0 - 0	0 - 0 - 0	5 - 5 - 5	2 - 2 - 2	7 - 7 - 7	15 - 15 - 15	3	0
4 NBT	7 - 0 - 7	18 - 0 - 18	7 - 7 - 7	2.5 - 2.5 - 2.5	25 - 25 - 25	40 - 40 - 40	4	1
5 WBL	0 - 0 - 0	0 - 0 - 0	5 - 5 - 5	2 - 2 - 2	7 - 7 - 7	15 - 15 - 15	3	0
6 EBT	7 - 0 - 7	12 - 0 - 12	7 - 16 - 7	1 - 1 - 1	45 - 45 - 45	0 - 45 - 45	4	1
7 NBL	0 - 0 - 0	0 - 0 - 0	5 - 5 - 5	2 - 2 - 2	7 - 7 - 7	15 - 15 - 15	3	0
8 SBT	7 - 0 - 7	18 - 0 - 18	7 - 7 - 7	2.5 - 2.5 - 2.5	25 - 25 - 25	40 - 40 - 40	4	1

Last In Service Date: unknown

Permitted Phases

	12345678
Default	12345678
External Permit 0	--------
External Permit 1	-2-4-6-8
External Permit 2	-2-4-6-8

Current TOD Schedule	Plan	Cycle	Green Time 1 EBL	2 WBT	3 SBL	4 NBT	5 WBL	6 EBT	7 NBL	8 SBT	Ring Offset	Offset
	1	110	7	65	7	15	7	65	7	15	0	78
	2	150	11	70	13	40	11	70	13	40	0	104
	3	100	7	53	7	17	7	53	7	17	0	8
	4	120	9	69	9	17	9	69	9	17	0	98
	5	100	7	53	7	17	7	53	7	17	0	0
	6	150	15	87	11	21	15	87	11	21	0	126
	7	130	11	77	9	17	11	77	9	17	0	124
	8	150	9	50	43	32	9	50	43	32	0	94
	9	150	9	63	43	19	9	63	43	19	0	118
	18	110	7	65	7	15	7	65	7	15	0	50
	19	130	11	75	11	17	11	75	11	17	0	112
	20	120	11	63	9	21	11	63	9	21	0	114

Local TOD Schedule

Time	Plan	DOW
0000	Free	Su M T W Th F S
0500	1	M T W Th F
0600	2	M T W Th F
0700	18	Su S
0715	8	M T W Th F
0900	2	M T W Th F
1000	19	Su S
1000	3	M T W Th F
1130	4	M T W Th F
1330	9	M T W Th F
1545	6	M T W Th F
1900	20	Su S
1900	7	M T W Th F
2200	Free	M T W Th F

Current Time of Day Function

Time	Function	Settings *	Day of Week
0000	TOD OUTPUTS	-7------	SuM T W ThF S
0715	TOD OUTPUTS	-------1	M T W ThF
0900	TOD OUTPUTS	-7------	M T W ThF
1330	TOD OUTPUTS	-------1	M T W ThF
1545	TOD OUTPUTS	-7------	M T W ThF

Local Time of Day Function

Time	Function	Settings *	Day of Week
0000	TOD OUTPUTS	-7------	SuM T W ThF S
0715	TOD OUTPUTS	-------1	M T W ThF
0900	TOD OUTPUTS	-7------	M T W ThF
1330	TOD OUTPUTS	-------1	M T W ThF
1545	TOD OUTPUTS	-7------	M T W ThF

*** Settings**

Blank - FREE - Phase Bank 1, Max 1
Blank - Plan - Phase Bank 1, Max 2
1 - Phase Bank 2, Max 1
2 - Phase Bank 2, Max 2
3 - Phase Bank 3, Max 1
4 - Phase Bank 3, Max 2
5 - EXTERNAL PERMIT 1
6 - EXTERNAL PERMIT 2
7 - X-PED OMIT
8 - TBA

No Calendar Defined/Enabled

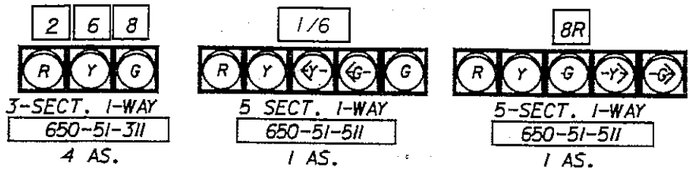

NOTE: 1.- ALL SIGNALS HEADS SHALL HAVE TUNNEL VISORS, 22 REQUIRED.

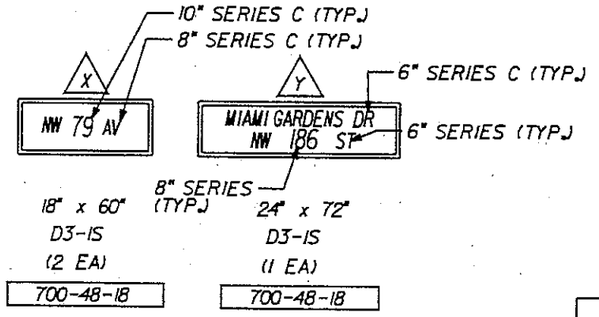

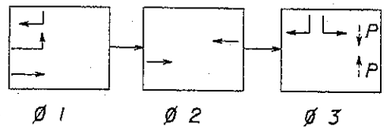

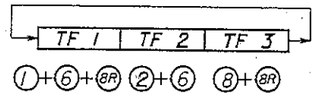

SIGNAL OPERATING PLAN

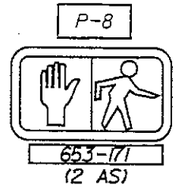

R10-4B
9" X 12"
(2 REQ'D)

CONTROLLER TIMING PLAN								
TIMING INTERVAL	TIMING FUNCTION							
	1	2	3	4	5	6	7	8
MINIMUM GREEN (INITIAL)								
EXTENSION (PASSAGE)								
MAXIMUM GREEN I								
MAXIMUM GREEN II								
YELLOW								
ALL RED								
PEDESTRIAN WALK								
PEDESTRIAN CLEAR								

(PROVIDED BY MIAMI DADE PUBLIC WORKS)

DETECTORS FOR LOOPS		
MVM'T NO.	NO. OF LOOPS	NO. OF DETS.
L-1	1	1
L-2	0	0
L-3	0	0
L-4	0	0
L-5	0	0
L-6	0	0
L-7	0	0
L-8	2	2

NOTES

1.- MAJOR STREET: MIAMI GARDENS DR
MINOR STREET: NW 79 AVE
2.- SIGNAL OPERATING PLAN NO. 14 WITH THE ABOVE INDICATED MODIFICATIONS.
3.- FLASHING OPERATION: NW 79 AVE., RED.
MIAMI GARDENS DR., YELLOW.
4.- SOUTHERN BELL SERVICE POINT PER MR. RICK RENFROW PHONE 305-260-8243.
5.- FP&L SERVICE POINT PER MS. JUANA TELLERIA PHONE 305-442-5129.
6.- NEW FP&L SERVICE POINT TO BE PICKED UP AT PULL BOX LOCATED AT STA 121+18 42.12 RT.
7.- PHASES 1 AND 3 ARE ACTUATED, PHASE 2 IS RECALL.
8.- LOOP ASSEMBLIES 660-2-101 DEVIATES FROM FDOT STANDARDS AND SHALL BE 5'X30' FOR TURN LANES.
9.- ALL PULL BOXES SHALL BE INSTALLED WITH A MINIMUM 5'X5'X4" CONCRETE PAD WHEN NOT LOCATED WITHIN A SIDEWALK. COST OF CONCRETE PAD TO BE INCLUDED IN PULL BOX PAY ITEM.
10.- CONTRACTOR SHALL WIDEN SIDEWALK AS NECESSARY TO PROVIDE 6' MIN. CLEARANCE AROUND PROP. CONTROLLER CABINET AND MAST-ARMS TO COMPLY WITH ADA, (SEE ROADWAY PLAN FOR DETAILS).

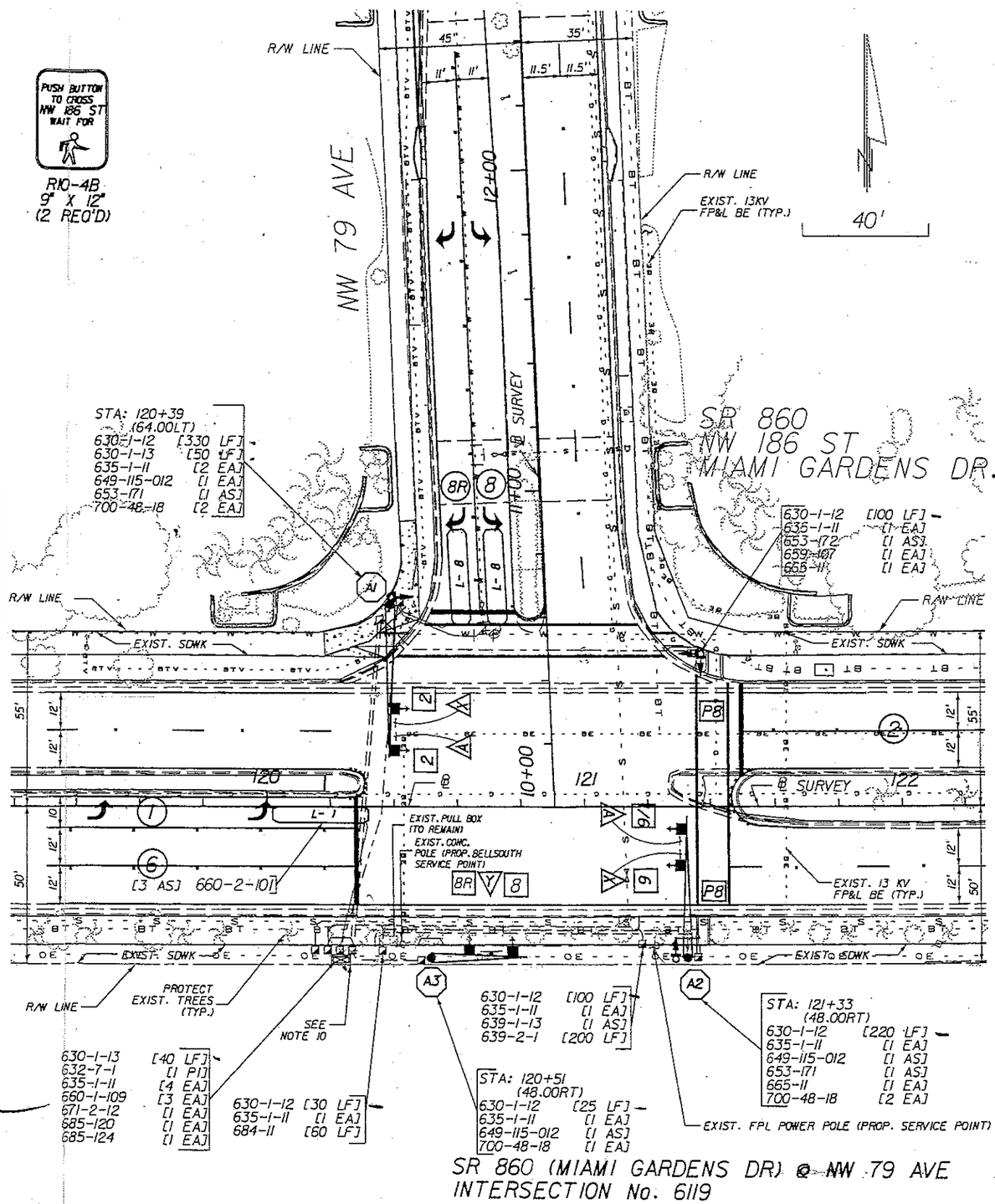

SR 860 (MIAMI GARDENS DR) @ NW 79 AVE
INTERSECTION No. 6119

James Gran, P.E.
FL No. 41917
APR 24 2002

REVISIONS					
DATE	BY	DESCRIPTION	DATE	BY	DESCRIPTION

CWI Civil Works, Inc.
Consulting Engineers EB 07528
10 NW 42 Ave., Suite 200
Miami, FL 33126

STATE OF FLORIDA
DEPARTMENT OF TRANSPORTATION

ROAD NO.	COUNTY	FINANCIAL PROJECT ID
SR 860	MIAMI-DADE	411202-1-52-01

TRAFFIC SIGNAL PLAN

SHEET NO. T-4

TOD Schedule Report

for 6119: Miami Gardens Dr&NW 79 Av

Print Date: 8/26/2013

Print Time: 9:01 AM

Asset	Intersection	TOD Schedule	Op Mode	Plan #	Cycle	Offset	TOD Setting	Active PhaseBank	Active Maximum
6119	Miami Gardens Dr&NW 79 Av	DOW-2		N/A	0	0	N/A	0	Max 0

Splits

PH 1	PH 2	PH 3	PH 4	PH 5	PH 6	PH 7	PH 8
EBL	WBT	-	-	-	EBT	-	SBT
0	0	0	0	0	0	0	0

Active Phase Bank: Phase Bank 1

Phase		Walk Phase Bank 1 2 3	Don't Walk 1 2 3	Min Initial 1 2 3	Veh Ext 1 2 3	Max Limit 1 2 3	Max 2 1 2 3	Yellow	Red
1	EBL	0 - 0 - 0	0 - 0 - 0	5 - 5 - 5	2.5 - 2.5 - 2.5	10 - 10 - 10	35 - 15 - 15	3	0
2	WBT	7 - 7 - 7	16 - 16 - 16	7 - 7 - 7	1 - 1 - 1	30 - 30 - 30	0 - 35 - 35	4	1
3	-	0 - 0 - 0	0 - 0 - 0	0 - 0 - 0	0 - 0 - 0	0 - 0 - 0	0 - 0 - 0	0	0
4	-	0 - 0 - 0	0 - 0 - 0	0 - 0 - 0	0 - 0 - 0	0 - 0 - 0	0 - 0 - 0	0	0
5	-	0 - 0 - 0	0 - 0 - 0	0 - 0 - 0	0 - 0 - 0	0 - 0 - 0	0 - 0 - 0	0	0
6	EBT	7 - 7 - 7	16 - 16 - 16	7 - 7 - 7	1 - 1 - 1	30 - 30 - 30	0 - 35 - 35	4	1
7	-	0 - 0 - 0	0 - 0 - 0	0 - 0 - 0	0 - 0 - 0	0 - 0 - 0	0 - 0 - 0	0	0
8	SBT	7 - 7 - 7	18 - 18 - 18	7 - 7 - 7	4 - 2.5 - 2.5	20 - 20 - 20	58 - 35 - 35	4	1

Current TOD Schedule	Plan	Cycle	Green Time 1 EBL	2 WBT	3 -	4 -	5 -	6 EBT	7 -	8 SBT	Ring Offset	Offset
	1	110	7	69	0	0	0	79	0	21	0	94
	2	150	13	77	0	0	0	93	0	47	0	38
	3	100	7	57	0	0	0	67	0	23	0	34
	4	120	9	75	0	0	0	87	0	23	0	100
	5	100	13	36	0	0	0	52	0	38	0	50
	6	150	15	71	0	0	0	89	0	51	0	112
	7	130	11	81	0	0	0	95	0	25	0	96
	18	110	7	71	0	0	0	81	0	19	0	34
	19	130	9	79	0	0	0	91	0	29	0	92
	20	120	9	71	0	0	0	83	0	27	0	112

Last In Service Date: unknown

Permitted Phases

	12345678
Default	12---6-8
External Permit 0	-2---6-8
External Permit 1	-2---6-8
External Permit 2	-2---6-8

Local TOD Schedule

Time	Plan	DOW
0000	Flash	Su M T W Th F S
0500	1	M T W Th F
0600	2	M T W Th F
0600	Free	Su S
0700	18	Su S
1000	19	Su S
1000	3	M T W Th F
1130	4	M T W Th F
1330	5	M T W Th F
1500	6	M T W Th F
1900	7	M T W Th F
1900	20	Su S
2200	Free	M T W Th F

Current Time of Day Function

Time	Function	Settings *	Day of Week
0000	TOD OUTPUTS	--------	SuM T W ThF S

Local Time of Day Function

Time	Function	Settings *	Day of Week
0000	TOD OUTPUTS	--------	SuM T W ThF S

*** Settings**

Blank - FREE - Phase Bank 1, Max 1
Blank - Plan - Phase Bank 1, Max 2
1 - Phase Bank 2, Max 1
2 - Phase Bank 2, Max 2
3 - Phase Bank 3, Max 1
4 - Phase Bank 3, Max 2
5 - EXTERNAL PERMIT 1
6 - EXTERNAL PERMIT 2
7 - X-PED OMIT
8 - TBA

No Calendar Defined/Enabled

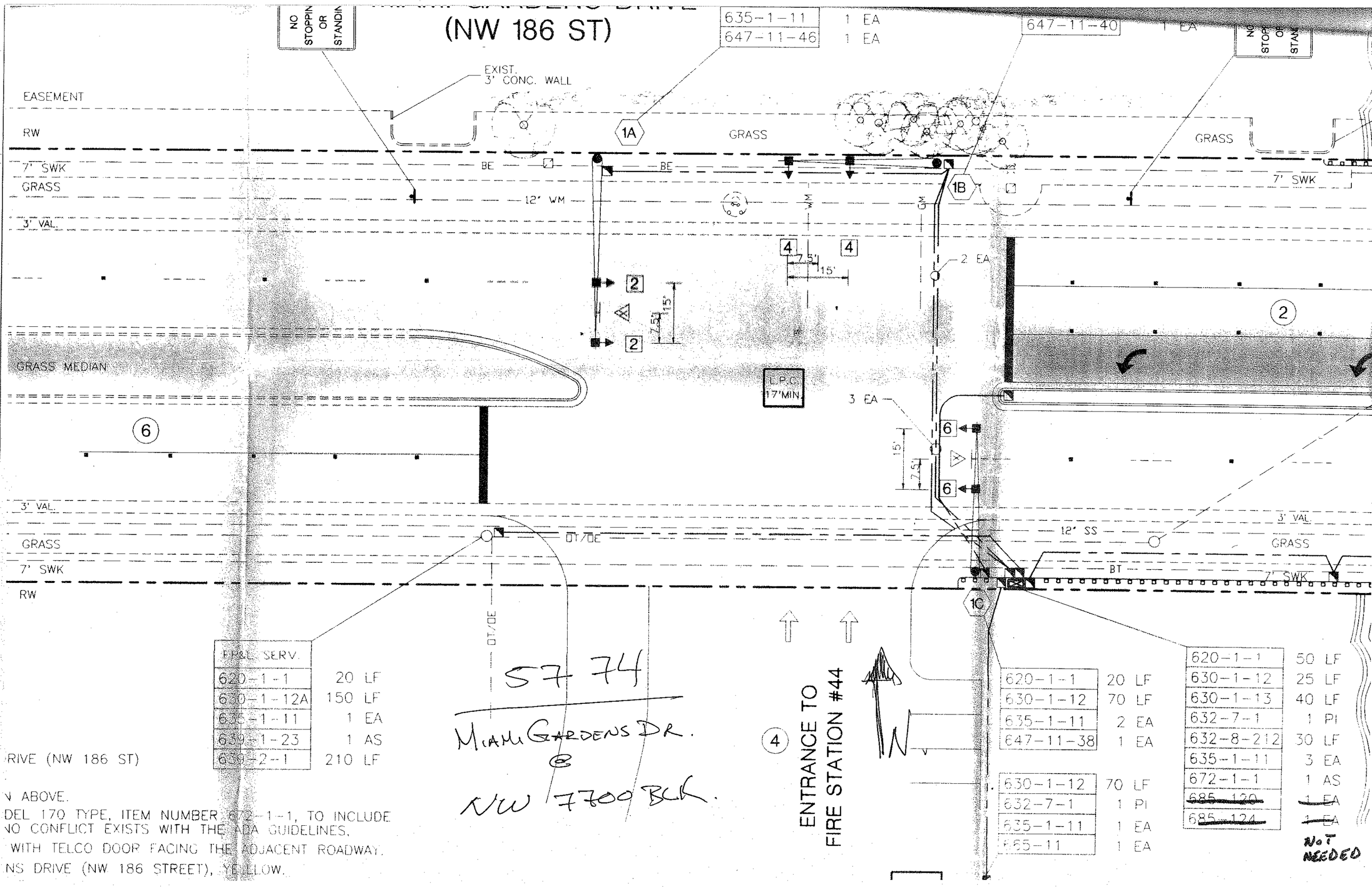

FP&L SERV.	
620-1-1	20 LF
630-1-12A	150 LF
635-1-11	1 EA
639-1-23	1 AS
639-2-1	210 LF

620-1-1	20 LF
630-1-12	70 LF
635-1-11	2 EA
647-11-38	1 EA

630-1-12	70 LF
632-7-1	1 PI
635-1-11	1 EA
665-11	1 EA

620-1-1	50 LF
630-1-12	25 LF
630-1-13	40 LF
632-7-1	1 PI
632-8-212	30 LF
635-1-11	3 EA
672-1-1	1 AS
~~685-120~~	~~1 EA~~
~~685-124~~	~~1 EA~~

NOT NEEDED

5774

MIAMI GARDENS DR.
@
NW 7700 BLK.

RIVE (NW 186 ST)

N ABOVE.
DEL 170 TYPE, ITEM NUMBER 672-1-1, TO INCLUDE
NO CONFLICT EXISTS WITH THE ADA GUIDELINES.
WITH TELCO DOOR FACING THE ADJACENT ROADWAY.
NS DRIVE (NW 186 STREET), YELLOW.

TOD Schedule Report

for 5774: Miami Gardens Dr@7700 Blk

Print Date: 8/26/2013

Print Time: 9:01 AM

Asset	Intersection	TOD Schedule	Op Mode	Plan #	Cycle	Offset	TOD Setting	Active PhaseBank	Active Maximum
5774	Miami Gardens Dr@7700 Blk	DOW-2		N/A	0	0	N/A	0	Max 0

Splits

PH 1	PH 2	PH 3	PH 4	PH 5	PH 6	PH 7	PH 8
-	WBT	-	NBT	-	EBT	-	-
0	0	0	0	0	0	0	0

Active Phase Bank: Phase Bank 1

Phase	Walk (Phase Bank 1 2 3)	Don't Walk (1 2 3)	Min Initial (1 2 3)	Veh Ext (1 2 3)	Max Limit (1 2 3)	Max 2 (1 2 3)	Yellow	Red
1 -	0 - 0 - 0	0 - 0 - 0	0 - 0 - 0	0 - 0 - 0	0 - 0 - 0	0 - 0 - 0	0	0
2 WBT	0 - 0 - 0	0 - 0 - 0	16 - 16 - 16	1 - 1 - 1	16 - 16 - 16	0 - 0 - 0	4	1.5
3 -	0 - 0 - 0	0 - 0 - 0	0 - 0 - 0	0 - 0 - 0	0 - 0 - 0	0 - 0 - 0	0	0
4 NBT	0 - 0 - 0	0 - 0 - 0	7 - 7 - 7	3 - 3 - 3	40 - 40 - 40	0 - 0 - 0	4	2
5 -	0 - 0 - 0	0 - 0 - 0	0 - 0 - 0	0 - 0 - 0	0 - 0 - 0	0 - 0 - 0	0	0
6 EBT	0 - 0 - 0	0 - 0 - 0	16 - 16 - 16	1 - 1 - 1	16 - 16 - 16	0 - 0 - 0	4	1.5
7 -	0 - 0 - 0	0 - 0 - 0	0 - 0 - 0	0 - 0 - 0	0 - 0 - 0	0 - 0 - 0	0	0
8 -	0 - 0 - 0	0 - 0 - 0	0 - 0 - 0	0 - 0 - 0	0 - 0 - 0	0 - 0 - 0	0	0

Current TOD Schedule	Plan	Cycle	1	2	3	4	5	6	7	8	Ring Offset	Offset
			-	WBT	-	NBT	-	EBT	-	-		

Last In Service Date: unknown

Permitted Phases

	12345678
Default	-2-4-6--
External Permit 0	--------
External Permit 1	--------
External Permit 2	--------

Local TOD Schedule

Time	Plan	DOW
0000	Free	Su M T W Th F S

Current Time of Day Function

Time	Function	Settings *	Day of Week
0000	TOD OUTPUTS	--------	SuM T W ThF S

Local Time of Day Function

Time	Function	Settings *	Day of Week
0000	TOD OUTPUTS	--------	SuM T W ThF S

*** Settings**

Blank - FREE - Phase Bank 1, Max 1
Blank - Plan - Phase Bank 1, Max 2
1 - Phase Bank 2, Max 1
2 - Phase Bank 2, Max 2
3 - Phase Bank 3, Max 1
4 - Phase Bank 3, Max 2
5 - EXTERNAL PERMIT 1
6 - EXTERNAL PERMIT 2
7 - X-PED OMIT
8 - TBA

No Calendar Defined/Enabled

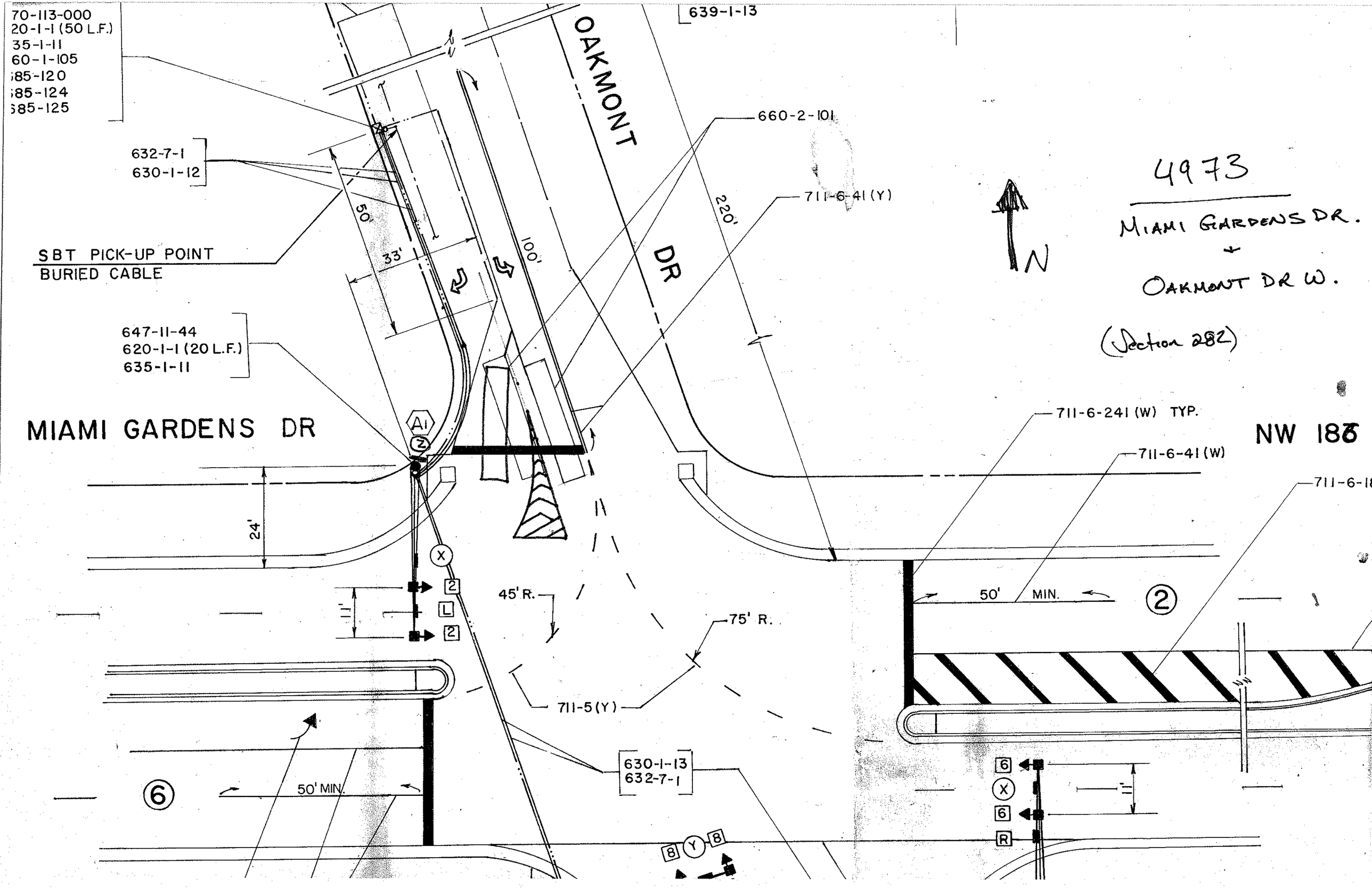

70-113-000
20-1-1 (50 L.F.)
35-1-11
60-1-105
85-120
85-124
85-125
639-1-13
OAKMONT
DR
660-2-101
711-6-41 (Y)
220'
100'
50'
33'
632-7-1
630-1-12
SBT PICK-UP POINT
BURIED CABLE
647-11-44
620-1-1 (20 L.F.)
635-1-11
MIAMI GARDENS DR
A1
Z
X
24'
11'
2
L
2
45' R.
75' R.
711-5 (Y)
630-1-13
632-7-1
6
50' MIN.
8
Y
8
711-6-241 (W) TYP.
711-6-41 (W)
711-6-18
NW 186
50' MIN.
2
6
X
6
R
11'
N
4973
MIAMI GARDENS DR.
+
OAKMONT DR W.
(Section 282)

TOD Schedule Report

for 4973: Miami Gardens Dr&Oakmont Dr W

Print Date: 8/26/2013

Print Time: 8:59 AM

Asset	Intersection	TOD Schedule	Op Mode	Plan #	Cycle	Offset	TOD Setting	Active PhaseBank	Active Maximum
4973	Miami Gardens Dr&Oakmont Dr W	DOW-2		N/A	0	0	N/A	0	Max 0

Splits

PH 1	PH 2	PH 3	PH 4	PH 5	PH 6	PH 7	PH 8
-	WBT	SBT	NBT	-	EBT	-	-
0	0	0	0	0	0	0	0

Active Phase Bank: Phase Bank 1

Phase	Walk	Don't Walk	Min Initial	Veh Ext	Max Limit	Max 2	Yellow	Red
	Phase Bank 1 2 3	1 2 3	1 2 3	1 2 3	1 2 3	1 2 3		
1 -	0 - 0 - 0	0 - 0 - 0	0 - 0 - 0	0 - 0 - 0	0 - 0 - 0	0 - 0 - 0	0	0
2 WBT	0 - 0 - 0	0 - 0 - 0	16 - 16 - 16	1 - 1 - 1	35 - 45 - 35	0 - 0 - 0	4	1.3
3 SBT	0 - 0 - 0	0 - 0 - 0	7 - 7 - 7	2.5 - 2.5 - 2.5	15 - 12 - 14	25 - 0 - 0	4	1.7
4 NBT	0 - 0 - 0	0 - 0 - 0	7 - 7 - 7	2.5 - 2.5 - 2.5	15 - 12 - 14	25 - 0 - 0	4	2.2
5 -	0 - 0 - 0	0 - 0 - 0	0 - 0 - 0	0 - 0 - 0	0 - 0 - 0	0 - 0 - 0	0	0
6 EBT	0 - 0 - 0	0 - 0 - 0	16 - 16 - 16	1 - 1 - 1	35 - 45 - 35	0 - 0 - 0	4	1.3
7 -	0 - 0 - 0	0 - 0 - 0	0 - 0 - 0	0 - 0 - 0	0 - 0 - 0	0 - 0 - 0	0	0
8 -	0 - 0 - 0	0 - 0 - 0	0 - 0 - 0	0 - 0 - 0	0 - 0 - 0	0 - 0 - 0	0	0

Last In Service Date: unknown

Permitted Phases

	12345678
Default	-234-6--
External Permit 0	--------
External Permit 1	--------
External Permit 2	--------

Current TOD Schedule	Plan	Cycle	Green Time 1 -	2 WBT	3 SBT	4 NBT	5 -	6 EBT	7 -	8 -	Ring Offset	Offset
	1	110	0	72	11	10	0	72	0	0	0	34
	2	150	0	106	17	10	0	106	0	0	0	44
	3	100	0	60	13	10	0	60	0	0	0	72
	4	120	0	76	13	14	0	76	0	0	0	34
	5	100	0	62	11	10	0	62	0	0	0	12
	6	150	0	108	13	12	0	108	0	0	0	48
	7	130	0	84	13	16	0	84	0	0	0	64
	18	110	0	76	9	8	0	76	0	0	0	108
	19	130	0	84	15	14	0	84	0	0	0	58
	20	120	0	76	13	14	0	76	0	0	0	62

Local TOD Schedule

Time	Plan	DOW
0000	Flash	Su M T W Th F S
0500	1	M T W Th F
0600	2	M T W Th F
0600	Free	Su S
0700	18	Su S
1000	19	Su S
1000	3	M T W Th F
1130	4	M T W Th F
1330	5	M T W Th F
1500	6	M T W Th F
1900	7	M T W Th F
1900	20	Su S
2200	Free	M T W Th F

Current Time of Day Function

Time	Function	Settings *	Day of Week
0000	TOD OUTPUTS	--------	SuM T W ThF S

Local Time of Day Function

Time	Function	Settings *	Day of Week
0000	TOD OUTPUTS	--------	SuM T W ThF S

*** Settings**

Blank - FREE - Phase Bank 1, Max 1
Blank - Plan - Phase Bank 1, Max 2
1 - Phase Bank 2, Max 1
2 - Phase Bank 2, Max 2
3 - Phase Bank 3, Max 1
4 - Phase Bank 3, Max 2
5 - EXTERNAL PERMIT 1
6 - EXTERNAL PERMIT 2
7 - X-PED OMIT
8 - TBA

No Calendar Defined/Enabled

282

SIGNAL HEAD DETAILS

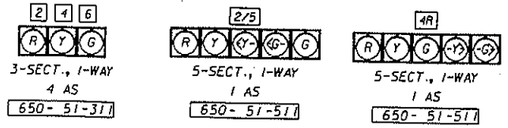

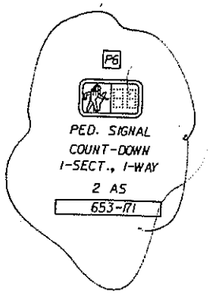

SIGNAL OPERATING PLAN

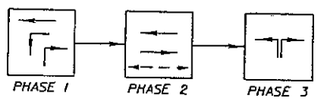

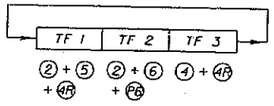

OVERHEAD STREET NAME SIGNS

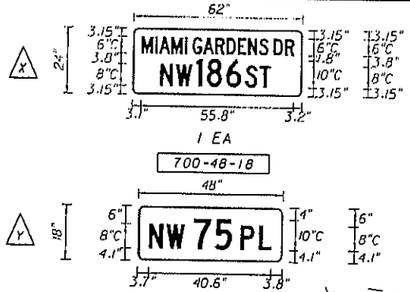

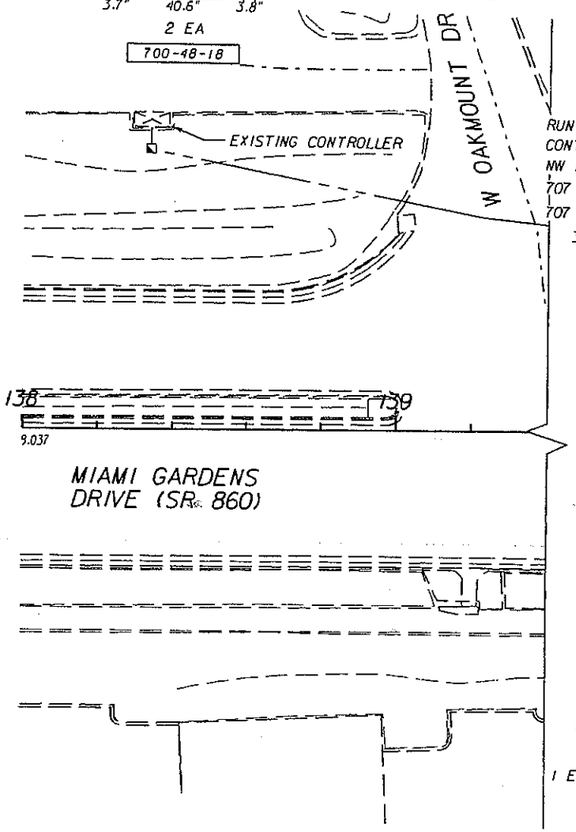

NOTES

1. SIGNAL TIMING TO BE PROVIDED BY MIAMI-DADE COUNTY TRAFFIC SIGNAL AND SIGN DIVISION.
2. LOOP ASSEMBLY 660-2-101 DEVIATES FROM F.D.O.T. STANDARDS AND SHALL BE 6' X 30' FOR THRU LANES AND 5' X 30' FOR LEFT TURN LANES.

CONTROLLER OPERATIONS

1. MAJOR STREET: NW 186 ST, MIAMI GARDENS DRIVE (SR 860)
   MINOR STREET: NW 75TH PLACE
2. STANDARD SIGNAL OPERATING PLAN: SEE ABOVE
3. PHASES 01 & 03 ACTUATED, PHASE 02 RECALL
4. SIGNAL COORDINATION PHASE IS 02
5. FLASHING OPERATION: 2, 5, 6 YELLOW, 4, 4R, RED

DETECTORS FOR LOOPS		
LOOP	NO. OF LOOPS	NO. OF DETS.
L-4	1	1
L-4R	1	
L-5	1	1

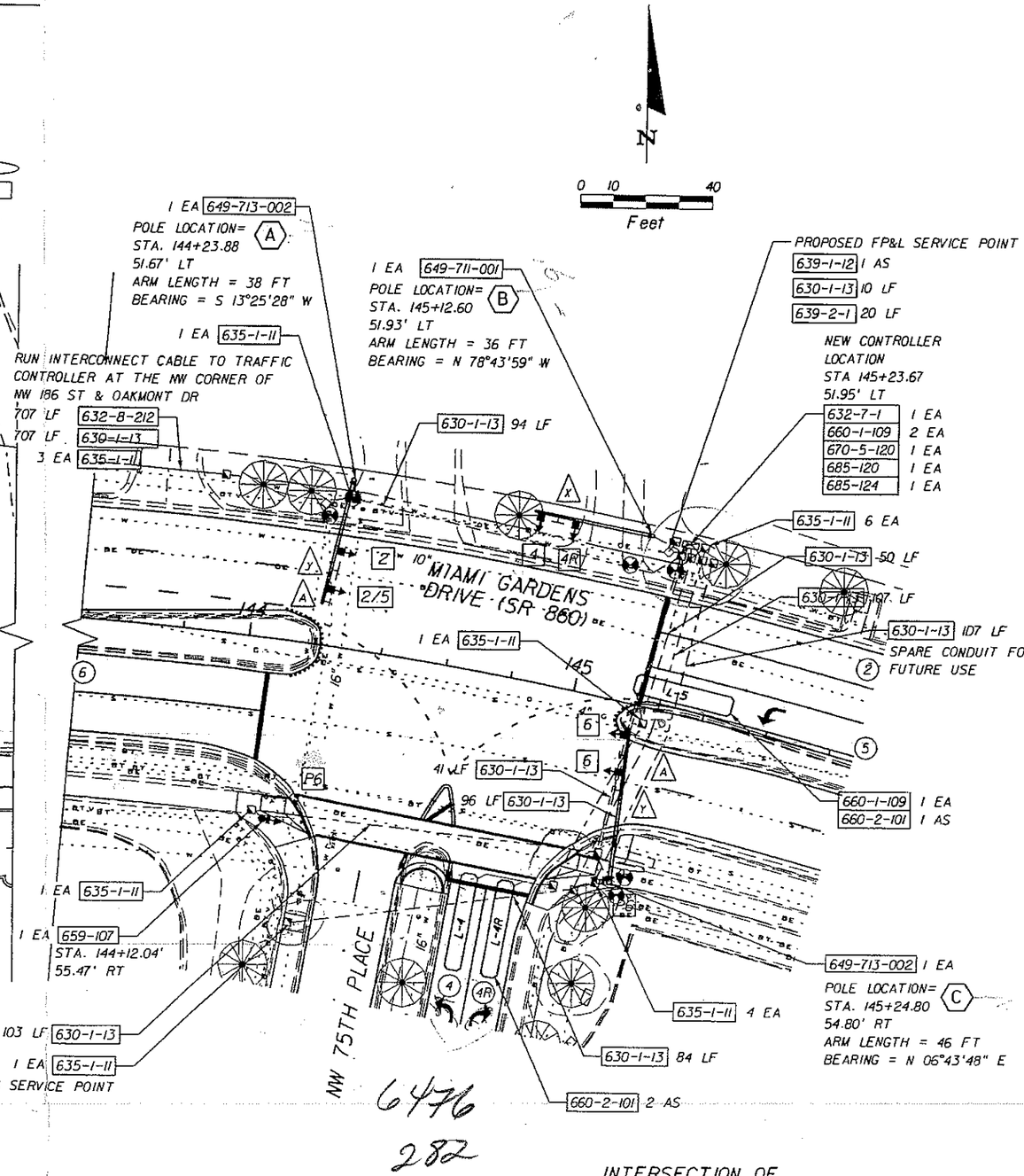

6476
282

INTERSECTION OF
MIAMI GARDENS DRIVE (SR 860)
AT NW 75TH PLACE

ID NO. 6476

REVISIONS					
DATE	BY	DESCRIPTION	DATE	BY	DESCRIPTION

S Z & A
SANCHEZ, ZEPPETELLI & ASSOCIATES
10305 NW 41st STREET SUITE 103
MIAMI, FLORIDA 33178
(305) 477-4467
CERTIFICATE OF AUTHORIZATION NO. 7848
ENGINEER OF RECORD: FRANK PANELLAS, P.E.
P.E. LICENSE NO. 59448

STATE OF FLORIDA
DEPARTMENT OF TRANSPORTATION

ROAD NO.	COUNTY	FINANCIAL PROJECT ID
SR 860	MIAMI-DADE	407736-4-52-01

SIGNALIZATION PLAN

SHEET NO. T-4

1/11/2006 4:41:52 PM Z:\FDOT\districtwide\407736\signals\plansg01.dgn

NOTICE: THE OFFICIAL RECORD OF THIS SHEET IS THE ELECTRONIC FILE SIGNED AND SEALED UNDER RULE 61G15-23.003, F.A.C.

(17)
6472

TOD Schedule Report

for 6476: Miami Gardens Dr&NW 75 Pl

Print Date: 8/17/2013

Print Time: 7:09 PM

Asset	Intersection	TOD Schedule	Op Mode	Plan #	Cycle	Offset	TOD Setting	Active PhaseBank	Active Maximum
6476	Miami Gardens Dr&NW 75 Pl	DOW-7		N/A	0	0	N/A	0	Max 0

Splits

PH 1	PH 2	PH 3	PH 4	PH 5	PH 6	PH 7	PH 8
-	WBT	-	NBT	WBL	EBT	-	-
0	0	0	0	0	0	0	0

Active Phase Bank: Phase Bank 1

Phase	Walk	Don't Walk	Min Initial	Veh Ext	Max Limit	Max 2	Yellow	Red
	Phase Bank 1 2 3							
1 -	0 - 0 - 0	0 - 0 - 0	0 - 0 - 0	0 - 0 - 0	0 - 0 - 0	0 - 0 - 0	0	0
2 WBT	7 - 7 - 7	13 - 13 - 13	7 - 7 - 7	1 - 1 - 1	40 - 40 - 40	0 - 40 - 40	4	0.9
3 -	0 - 0 - 0	0 - 0 - 0	0 - 0 - 0	0 - 0 - 0	0 - 0 - 0	0 - 0 - 0	0	0
4 NBT	7 - 7 - 7	20 - 20 - 20	7 - 7 - 7	2.5 - 2.5 - 2.5	20 - 20 - 20	30 - 30 - 30	4	1
5 WBL	0 - 0 - 0	0 - 0 - 0	5 - 5 - 5	2 - 2 - 2	10 - 10 - 10	15 - 15 - 15	3	0
6 EBT	7 - 7 - 7	13 - 13 - 13	7 - 7 - 7	1 - 1 - 1	40 - 40 - 40	0 - 40 - 40	4	0.9
7 -	0 - 0 - 0	0 - 0 - 0	0 - 0 - 0	0 - 0 - 0	0 - 0 - 0	0 - 0 - 0	0	0
8 -	0 - 0 - 0	0 - 0 - 0	0 - 0 - 0	0 - 0 - 0	0 - 0 - 0	0 - 0 - 0	0	0

Last In Service Date: unknown

Permitted Phases

	12345678
Default	-2-456--
External Permit 0	--------
External Permit 1	-2-4-6--
External Permit 2	-2-4-6--

Current TOD Schedule	Plan	Cycle	Green Time 1 -	2 WBT	3 -	4 NBT	5 WBL	6 EBT	7 -	8 -	Ring Offset	Offset
	1	110	0	73	0	27	7	63	0	0	0	36
	2	150	0	113	0	27	9	101	0	0	0	52
	3	100	0	63	0	27	7	53	0	0	0	78
	4	120	0	83	0	27	7	73	0	0	0	36
	5	100	0	63	0	27	7	53	0	0	0	12
	6	150	0	110	0	30	11	96	0	0	0	48
	7	130	0	93	0	27	9	81	0	0	0	66
	18	110	0	73	0	27	7	63	0	0	0	108
	19	130	0	93	0	27	9	81	0	0	0	54
	20	120	0	83	0	27	9	71	0	0	0	60

Local TOD Schedule

Time	Plan	DOW
0000	Flash	Su M T W Th F S
0500	1	M T W Th F
0600	2	M T W Th F
0600	Free	Su S
0700	18	Su S
1000	19	Su S
1000	3	M T W Th F
1130	4	M T W Th F
1330	5	M T W Th F
1500	6	M T W Th F
1900	7	M T W Th F
1900	20	Su S
2200	Free	M T W Th F

Current Time of Day Function

Time	Function	Settings *	Day of Week
0000	TOD OUTPUTS	--------	SuM T W ThF S

Local Time of Day Function

Time	Function	Settings *	Day of Week
0000	TOD OUTPUTS	--------	SuM T W ThF S

*** Settings**

Blank - FREE - Phase Bank 1, Max 1
Blank - Plan - Phase Bank 1, Max 2
1 - Phase Bank 2, Max 1
2 - Phase Bank 2, Max 2
3 - Phase Bank 3, Max 1
4 - Phase Bank 3, Max 2
5 - EXTERNAL PERMIT 1
6 - EXTERNAL PERMIT 2
7 - X-PED OMIT
8 - TBA

No Calendar Defined/Enabled

SIGNAL HEAD & SIGN DETAILS

2 | 4 | 6 | 8 — R Y G

3-SECT., 1-WAY
6 AS
650- 51-311

1/6 | 5/2 — R Y FY G G

5-SECT., 1-WAY
2 AS
650- 51-511

P8

PED. SIGNAL
COUNT-DOWN
1-SECT., 1-WAY
2 AS
653-191

N

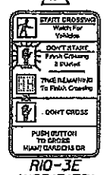

R10-3E
(MODIFIED)
9"X 18"
(COST TO BE INCLUDED IN ITEM 665-11)
2 EA

INTERNALLY ILLUMINATED LED SIGN

X

NW 186 ST
Miami Gardens Dr

SERIES "C"
8" NUMERALS
6" CAP. LETTERS

D3-1
699-1-1
2 EA

Y

NW 73 AV

SERIES "C"
10" NUMERALS
8" CAP. LETTERS

D3-1
699-1-1
2 EA

INTERNALLY ILLUMINATED LED SIGN

NOTES

1. SIGNAL TIMING TO BE PROVIDED BY MIAMI-DADE COUNTY TRAFFIC SIGNAL AND SIGNS DIVISION.
2. ALL STREET NAME SIGNS INSTALLED ON MAST ARM WILL BE INTERNALLY ILLUMINATED.
3. THE SPACE BETWEEN LETTERS COULD BE REDUCED IN ORDER TO COMPLY WITH LETTER SIZE AND OVERRAL DIMENSION IN THE OVERHEAD STREET NAME SIGNS.
4. 5'X5' CONCRETE SLAB AROUND PULL BOX. COST TO BE INCLUDED UNDER PAY ITEM 635-1-11
5. ALIGN PEDESTRIAN HEADS WITH BEGINNING OF CROSSWALK CENTER.
6. PAY ITEM 630-1-13 INCLUDES THE COST OF REPLACING ENTIRE SIDEWALK FLAGS IF DAMAGE OCCURS DUE TO CONDUIT WORK.

CONTROLLER OPERATIONS

1. MAJOR STREET: SR-960/MIAMI GARDENS DR
   MINOR STREET: NW 73 AV
2. SOP: 7
3. PHASES: 3 RECALL
   1, 2 AND 4 ACTUATED
4. FLASHING OPERATIONS: 2, 6 YELLOW
   4, 8 RED

SIGNAL OPERATION PLAN

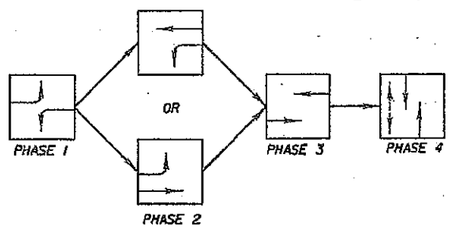

DETECTORS FOR LOOPS		
LOOP	NO. OF LOOPS	NO. OF NEW DETS.
L-1	1	1
L-5	1	1
L-4	2	1
L-8	1	1

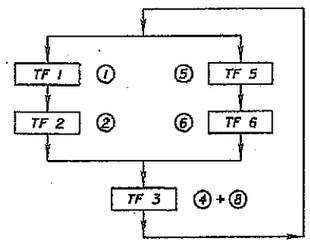

630-1-13 1572 LF

SIGNAL BACKPLATES:
659-101 2 EA
659-118 2 EA

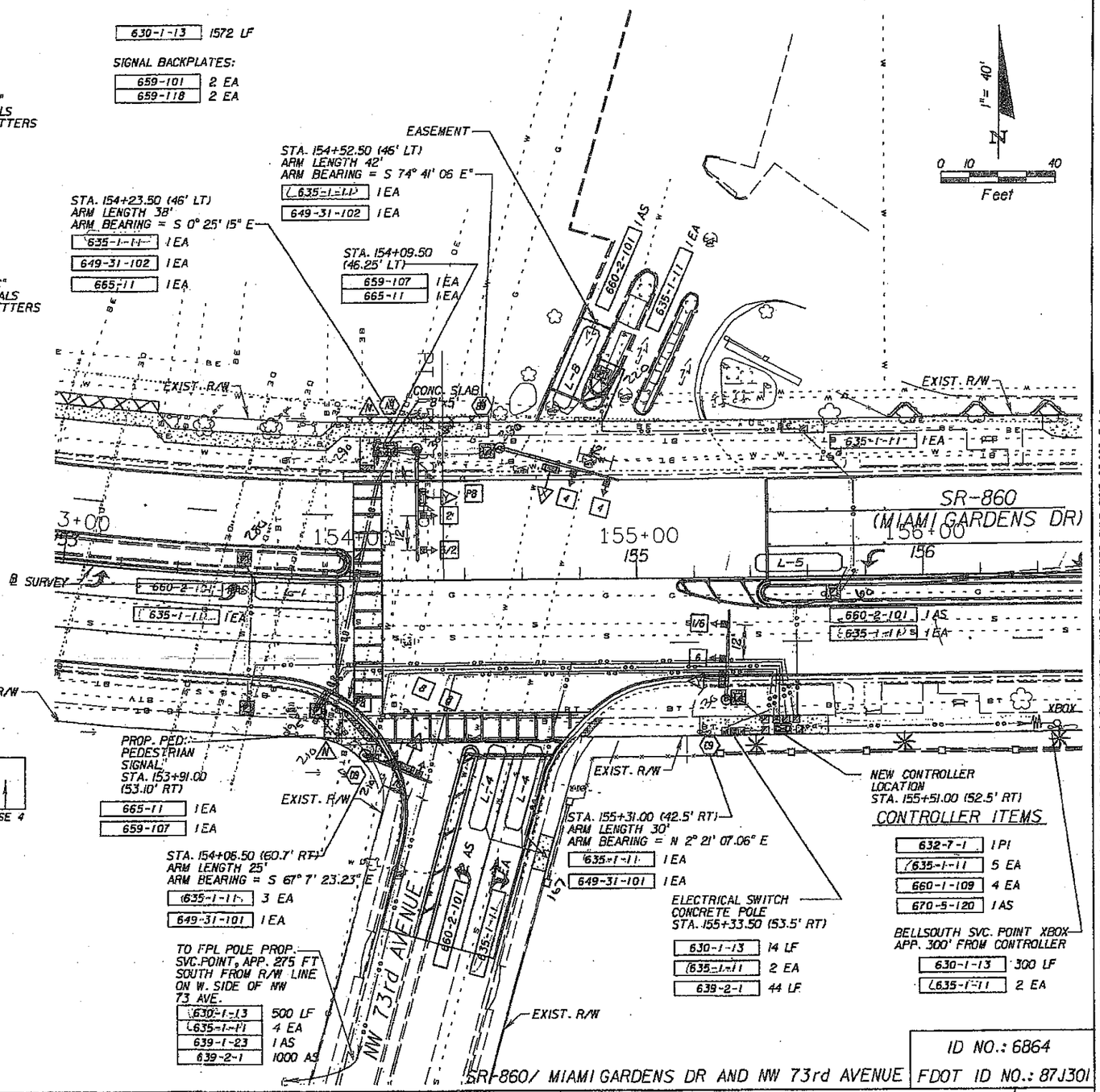

ID NO.: 6864
FDOT ID NO.: 87J301

SR-860/ MIAMI GARDENS DR AND NW 73rd AVENUE

REVISIONS			
DATE	DESCRIPTION	DATE	DESCRIPTION

FDOT DISTRICT SIX
VINOD TULI, P.E.
1000 N.W. 111TH AVENUE
MIAMI, FLORIDA 33172
P.E. NO. 44916

STATE OF FLORIDA
DEPARTMENT OF TRANSPORTATION

ROAD NO.	COUNTY	FINANCIAL PROJECT ID
860	MIAMI-DADE	407736-1-52-01

SIGNALIZATION PLAN

SHEET NO. T-8

NOTICE: THE OFFICIAL RECORD OF THIS SHEET IS THE ELECTRONIC FILE SIGNED AND SEALED UNDER RULE 61G15-23.003, F.A.C.

TOD Schedule Report

for 6864: Miami Gardens Dr@NW 73 Av

Print Date: 8/17/2013

Print Time: 7:29 PM

Asset	Intersection	TOD Schedule	Op Mode	Plan #	Cycle	Offset	TOD Setting	Active PhaseBank	Active Maximum
6864	Miami Gardens Dr@NW 73 Av	DOW-7		N/A	0	0	N/A	0	Max 0

Splits

PH 1	PH 2	PH 3	PH 4	PH 5	PH 6	PH 7	PH 8
EBL	WBT	-	NBT	WBL	EBT	-	SBT
0	0	0	0	0	0	0	0

Active Phase Bank: Phase Bank 1

Phase		Walk	Don't Walk	Min Initial	Veh Ext	Max Limit	Max 2	Yellow	Red
		Phase Bank 1 2 3	1 2 3	1 2 3	1 2 3	1 2 3	1 2 3		
1	EBL	0 - 0 - 0	0 - 0 - 0	5 - 5 - 5	2 - 2 - 2	10 - 10 - 10	15 - 15 - 15	3	0
2	WBT	0 - 0 - 0	0 - 0 - 0	16 - 16 - 16	1 - 1 - 1	40 - 40 - 40	0 - 40 - 40	4	1.5
3	-	0 - 0 - 0	0 - 0 - 0	0 - 0 - 0	0 - 0 - 0	0 - 0 - 0	0 - 0 - 0	0	0
4	NBT	0 - 0 - 0	0 - 0 - 0	7 - 7 - 7	2.5 - 2.5 - 2.5	20 - 20 - 20	30 - 30 - 30	4	1.6
5	WBL	0 - 0 - 0	0 - 0 - 0	5 - 5 - 5	2 - 2 - 2	10 - 10 - 10	15 - 15 - 15	3	0
6	EBT	0 - 0 - 0	0 - 0 - 0	16 - 16 - 16	1 - 1 - 1	40 - 40 - 40	0 - 40 - 40	4	1.5
7	-	0 - 0 - 0	0 - 0 - 0	0 - 0 - 0	0 - 0 - 0	0 - 0 - 0	0 - 0 - 0	0	0
8	SBT	7 - 7 - 7	22 - 22 - 22	7 - 7 - 7	2.5 - 2.5 - 2.5	20 - 20 - 20	30 - 30 - 30	4	1.6

Current TOD Schedule	Plan	Cycle	Green Time 1 EBL	2 WBT	3 -	4 NBT	5 WBL	6 EBT	7 -	8 SBT	Ring Offset	Offset
	1	110	6	75	0	15	6	75	0	15	0	40
	2	150	8	97	0	30	8	97	0	30	0	44
	3	100	6	59	0	21	6	59	0	21	0	98
	4	120	6	77	0	23	6	77	0	23	0	36
	5	100	6	59	0	21	6	59	0	21	0	12
	6	150	10	91	0	34	10	91	0	34	0	40
	7	130	8	85	0	23	8	85	0	23	0	66
	18	110	6	69	0	21	6	69	0	21	0	108
	19	130	8	79	0	28	8	79	0	28	0	54
	20	120	8	71	0	26	8	71	0	26	0	60

Last In Service Date: unknown

Permitted Phases

	12345678
Default	12-456-8
External Permit 0	--------
External Permit 1	-2-4-6-8
External Permit 2	-2-4-6-8

Local TOD Schedule

Time	Plan	DOW
0000	Free	Su M T W Th F S
0500	1	M T W Th F
0600	2	M T W Th F
0600	Free	Su S
0700	18	Su S
1000	19	Su S
1000	3	M T W Th F
1130	4	M T W Th F
1330	5	M T W Th F
1500	6	M T W Th F
1900	7	M T W Th F
1900	20	Su S
2200	Free	M T W Th F

Current Time of Day Function

Time	Function	Settings *	Day of Week
0000	TOD OUTPUTS	--------	SuM T W ThF S

Local Time of Day Function

Time	Function	Settings *	Day of Week
0000	TOD OUTPUTS	--------	SuM T W ThF S

*** Settings**

Blank - FREE - Phase Bank 1, Max 1
Blank - Plan - Phase Bank 1, Max 2
1 - Phase Bank 2, Max 1
2 - Phase Bank 2, Max 2
3 - Phase Bank 3, Max 1
4 - Phase Bank 3, Max 2
5 - EXTERNAL PERMIT 1
6 - EXTERNAL PERMIT 2
7 - X-PED OMIT
8 - TBA

No Calendar Defined/Enabled

STATE PROJ. NO.	SHEET NO.
87000-3563	93

REVISIONS				NAME	DATE
DATE	BY	DESCRIPTION	DESIGNED BY	JFB	11/84
			CHECKED BY	BEF	11/84
			DRAWN BY	BLC	11/84
			CHECKED BY	JFB	11/84
			SUPERVISED BY	BEF	11/84

APPROVED BY: Bruce E. Friedman DATE: 11/84

FLORIDA DEPARTMENT OF TRANSPORTATION

SIGNAL HEAD DETAILS

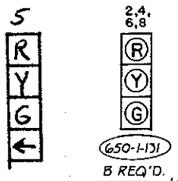

650-1-131
8 REQ'D.
NOTES 6 & 7

SIGNAL HEADS 2 & 6 REQUIRE BACKPLATES
659-101
4 REQ'D.

SIGN INVENTORY

LEG	ENTER	EXIT
NORTH		
SOUTH		
EAST		
WEST		

MIAMI GARDENS DR
NW 186 ST
D3-1
24" x 48"
700-84-1

NW 68 AV
D3-1
18" x 48"
700-84-1

PUSH BUTTON TO CROSS MIAMI GARDENS DR WAIT FOR GREEN
R10-3a
9" x 15"
700-84-1
2 REQ'D

CROSS ONLY AT CROSS WALKS
R10-2
12" x 18"
700-84-1
2 REQ'D.

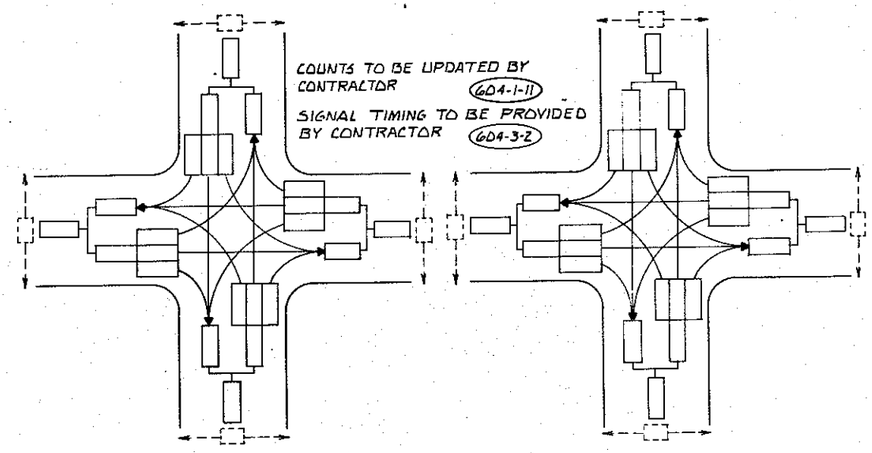

REMOVAL ITEMS

690-10	10 EA
690-20	6 EA
690-50	1 EA
690-70	4 EA NOTE 9

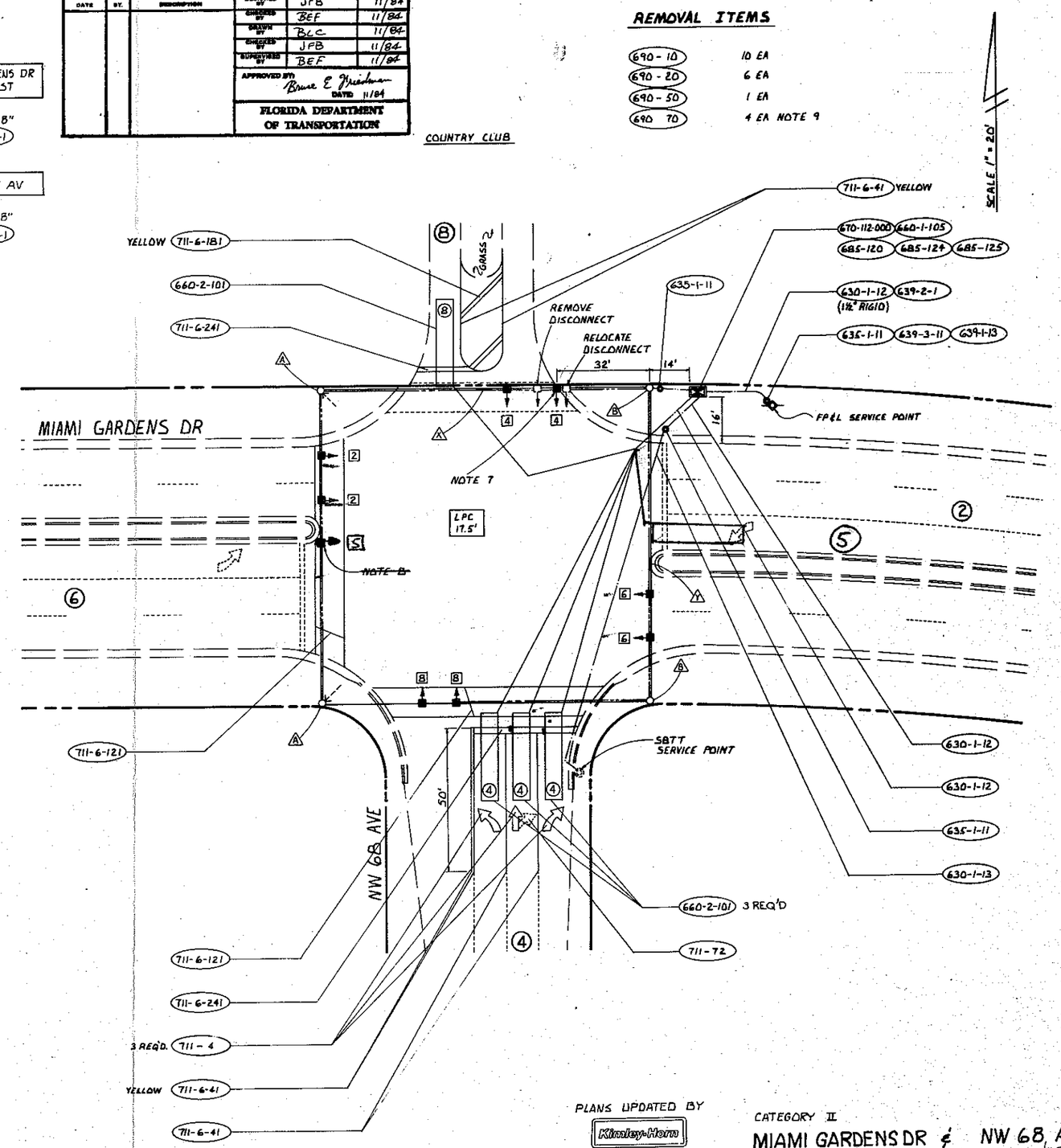

NOTES

1. DEMAND WATTAGE FOR THIS INTERSECTION IS 1565 WATTS.
2. ITEM 620-1-1 CONTRACTOR TO FURNISH AND INSTALL 130 LF OF GROUNDING ELECTRODE.
3. LOOP ASSEMBLY 660-2-101 SHALL BE 6' x 30'.
4. ALL CONDUIT SHALL BE 2" PVC UNLESS OTHERWISE INDICATED.
5. ALL PAVEMENT MARKINGS SHALL BE WHITE UNLESS OTHERWISE INDICATED.
6. RE-USE EXISTING SPAN ASSEMBLY, SIGNAL CABLE, AND DISCONNECT HANGERS.
7. RELOCATE EXISTING DISCONNECT HANGER AS PART OF 650-1-131.
8. ~~LEAVE EXISTING DISCONNECT HANGER IN PLACE WITH NO SIGNAL HEAD.~~
9. REMOVE ONE PUSHBUTTON ASSEMBLY FROM EACH POLE.

PLANS UPDATED BY
Kimley-Horn
NOVEMBER 1984

CATEGORY II
MIAMI GARDENS DR & NW 68 AVE
INTERSECTION IDENTIFICATION NUMBER 4287

TOD Schedule Report

for 4287: Miami Gardens Dr&NW 68 Av

Print Date: 8/26/2013

Print Time: 8:56 AM

Asset	Intersection	TOD Schedule	Op Mode	Plan #	Cycle	Offset	TOD Setting	Active PhaseBank	Active Maximum
4287	Miami Gardens Dr&NW 68 Av	DOW-2		N/A	0	0	N/A	0	Max 0

Splits

PH 1	PH 2	PH 3	PH 4	PH 5	PH 6	PH 7	PH 8
-	WBT	-	NBT	WBL	EBT	-	SBT
0	0	0	0	0	0	0	0

Active Phase Bank: Phase Bank 1

Phase	Walk	Don't Walk	Min Initial	Veh Ext	Max Limit	Max 2	Yellow	Red
	Phase Bank 1 2 3	1 2 3	1 2 3	1 2 3	1 2 3	1 2 3		
1 -	0 - 0 - 0	0 - 0 - 0	0 - 0 - 0	0 - 0 - 0	0 - 0 - 0	0 - 0 - 0	0	0
2 WBT	0 - 0 - 0	0 - 0 - 0	16 - 16 - 16	1 - 1 - 1	45 - 45 - 45	0 - 45 - 45	4	1.1
3 -	0 - 0 - 0	0 - 0 - 0	0 - 0 - 0	0 - 0 - 0	0 - 0 - 0	0 - 0 - 0	0	0
4 NBT	7 - 7 - 7	25 - 25 - 25	7 - 7 - 7	3 - 3 - 3	20 - 20 - 20	40 - 40 - 40	4	1
5 WBL	0 - 0 - 0	0 - 0 - 0	5 - 5 - 5	2 - 2 - 2	7 - 7 - 7	20 - 20 - 20	3	0
6 EBT	0 - 0 - 0	0 - 0 - 0	16 - 16 - 16	1 - 1 - 1	45 - 45 - 45	0 - 45 - 45	4	1.1
7 -	0 - 0 - 0	0 - 0 - 0	0 - 0 - 0	0 - 0 - 0	0 - 0 - 0	0 - 0 - 0	0	0
8 SBT	7 - 7 - 7	25 - 25 - 25	7 - 7 - 7	3 - 3 - 3	20 - 20 - 20	40 - 40 - 40	4	1

Last In Service Date: unknown

Permitted Phases

	12345678
Default	-2-456-8
External Permit 0	--------
External Permit 1	-2-4-6-8
External Permit 2	-2-4-6-8

Current TOD Schedule	Plan	Cycle	Green Time 1 -	2 WBT	3 -	4 NBT	5 WBL	6 EBT	7 -	8 SBT	Ring Offset	Offset
	1	110	0	81	0	19	7	71	0	19	0	84
	2	150	0	99	0	41	11	85	0	41	0	110
	3	100	0	69	0	21	7	59	0	21	0	32
	4	120	0	87	0	23	11	73	0	23	0	104
	5	100	0	69	0	21	7	59	0	21	0	60
	6	150	0	109	0	31	12	94	0	31	0	46
	7	130	0	95	0	25	7	85	0	25	0	128
	18	110	0	83	0	17	7	73	0	17	0	40
	19	130	0	89	0	31	11	75	0	31	0	128
	20	120	0	85	0	25	7	75	0	25	0	118

Local TOD Schedule

Time	Plan	DOW
0000	Free	Su M T W Th F S
0500	1	M T W Th F
0600	2	M T W Th F
0700	18	Su S
1000	19	Su S
1000	3	M T W Th F
1130	4	M T W Th F
1330	5	M T W Th F
1500	6	M T W Th F
1900	7	M T W Th F
1900	20	Su S
2200	Free	M T W Th F

Current Time of Day Function

Time	Function	Settings *	Day of Week
0000	TOD OUTPUTS	--------	SuM T W ThF S

Local Time of Day Function

Time	Function	Settings *	Day of Week
0000	TOD OUTPUTS	--------	SuM T W ThF S

*** Settings**

Blank - FREE - Phase Bank 1, Max 1
Blank - Plan - Phase Bank 1, Max 2
1 - Phase Bank 2, Max 1
2 - Phase Bank 2, Max 2
3 - Phase Bank 3, Max 1
4 - Phase Bank 3, Max 2
5 - EXTERNAL PERMIT 1
6 - EXTERNAL PERMIT 2
7 - X-PED OMIT
8 - TBA

No Calendar Defined/Enabled

8 EXISTING
O REMAIN

BOB – O – LINK DR

D3–1S (DOUBLE SIDED)
1 EXISTING TO REMAIN

4891

N

BOB-O-LINK DR
+
NW 186 STREET

BOB–O–LINK DR

EXISTING INTERCONNECT CONDUIT & CABLE
TO THE CONTROLLER ON THE NE CORNER
OF NW 68 AVE (RUN 1000' ±)

R/W LINE

SERVICE POINT

711–6–121
711–6–241
711–6–41(
711–6–41(

50'

30

1

711–4(TYP

INSTALL R4–7
ITEM NO. 700–40–1

135

INSTALL R4–7
ITEM NO. 700–40–1

6

R/W LINE

GUARD HOUSE

GATE

TOD Schedule Report

for 4891: Bob-O-Link Dr&Miami Gardens Dr

Print Date: 8/26/2013

Print Time: 8:58 AM

Asset	Intersection	TOD Schedule	Op Mode	Plan #	Cycle	Offset	TOD Setting	Active PhaseBank	Active Maximum
4891	Bob-O-Link Dr&Miami Gardens Dr	DOW-2		N/A	0	0	N/A	0	Max 0

Splits

PH 1	PH 2	PH 3	PH 4	PH 5	PH 6	PH 7	PH 8
EBL	WBT	-	NBT	WBL	EBT	-	SBT
0	0	0	0	0	0	0	0

Active Phase Bank: Phase Bank 1

Phase		Walk	Don't Walk	Min Initial	Veh Ext	Max Limit	Max 2	Yellow	Red
		Phase Bank 1 2 3	1 2 3	1 2 3	1 2 3	1 2 3	1 2 3		
1	EBL	0 - 0 - 0	0 - 0 - 0	5 - 5 - 5	2 - 2 - 2	5 - 5 - 5	15 - 15 - 15	3	0
2	WBT	0 - 0 - 0	0 - 0 - 0	16 - 16 - 16	1 - 1 - 1	35 - 35 - 35	0 - 40 - 40	4	1.1
3	-	0 - 0 - 0	0 - 0 - 0	0 - 0 - 0	0 - 0 - 0	0 - 0 - 0	0 - 0 - 0	0	0
4	NBT	7 - 7 - 7	19 - 19 - 19	7 - 7 - 7	2.5 - 2.5 - 2.5	15 - 15 - 15	45 - 40 - 40	4	1.5
5	WBL	0 - 0 - 0	0 - 0 - 0	5 - 5 - 5	2 - 2 - 2	5 - 5 - 5	15 - 15 - 15	3	0
6	EBT	0 - 0 - 0	0 - 0 - 0	16 - 16 - 16	1 - 1 - 1	35 - 35 - 35	0 - 40 - 40	4	1.1
7	-	0 - 0 - 0	0 - 0 - 0	0 - 0 - 0	0 - 0 - 0	0 - 0 - 0	0 - 0 - 0	0	0
8	SBT	7 - 7 - 7	19 - 19 - 19	7 - 7 - 7	2.5 - 2.5 - 2.5	15 - 15 - 15	45 - 40 - 40	4	1.5

Current TOD Schedule	Plan	Cycle	Green Time 1 EBL	2 WBT	3 -	4 NBT	5 WBL	6 EBT	7 -	8 SBT	Ring Offset	Offset
	1	110	7	65	0	25	7	65	0	25	0	92
	2	150	13	81	0	43	13	81	0	43	0	114
	3	100	7	51	0	29	7	51	0	29	0	42
	4	120	9	69	0	29	9	69	0	29	0	100
	5	100	7	55	0	25	7	55	0	25	0	62
	6	150	15	89	0	33	15	89	0	33	0	44
	7	130	9	79	0	29	9	79	0	29	0	128
	18	110	7	67	0	23	7	67	0	23	0	40
	19	130	11	71	0	35	11	71	0	35	0	120
	20	120	9	65	0	33	9	65	0	33	0	116

Last In Service Date: unknown

Permitted Phases

	12345678
Default	12-456-8
External Permit 0	--------
External Permit 1	-2-4-6-8
External Permit 2	-2-4-6-8

Local TOD Schedule

Time	Plan	DOW
0000	Flash	Su M T W Th F S
0500	1	M T W Th F
0600	2	M T W Th F
0600	Free	Su S
0700	18	Su S
1000	19	Su S
1000	3	M T W Th F
1130	4	M T W Th F
1330	5	M T W Th F
1500	6	M T W Th F
1900	7	M T W Th F
1900	20	Su S
2200	Free	M T W Th F

Current Time of Day Function

Time	Function	Settings *	Day of Week
0000	TOD OUTPUTS	--------	SuM T W ThF S

Local Time of Day Function

Time	Function	Settings *	Day of Week
0000	TOD OUTPUTS	--------	SuM T W ThF S

*** Settings**

Blank - FREE - Phase Bank 1, Max 1
Blank - Plan - Phase Bank 1, Max 2
1 - Phase Bank 2, Max 1
2 - Phase Bank 2, Max 2
3 - Phase Bank 3, Max 1
4 - Phase Bank 3, Max 2
5 - EXTERNAL PERMIT 1
6 - EXTERNAL PERMIT 2
7 - X-PED OMIT
8 - TBA

No Calendar Defined/Enabled

DADE COUNTY PUBLIC WORKS DEPT
HIGHWAY DIVISION

PROJECT NO. 662215 SHEET 143

SIGNAL HEAD DETAILS

2 4
6 8
R Y G

ITEM 650-1-131
8-REQ'D.

1 3
5 7
R Y ←

ITEM 650-1-131
8-REQ'D.

P2 P4
P6 P8

ITEM 653-171
8-REQ'D.

(X)

LUDLAM RD
NW 67 AV

2-REQ'D.

(Y)

MIAMI GARDENS DR
NW 186 ST

2-REQ'D.

ITEM D3-1S

(B)

LEFT TURN SIGNAL

R10-10
4-REQ'D.

(C)

NO TURN ON RED WHEN PEDESTRIAN IN CROSSWALK

R10-14S
4-REQ'D.

SCALE: 1" = 20'

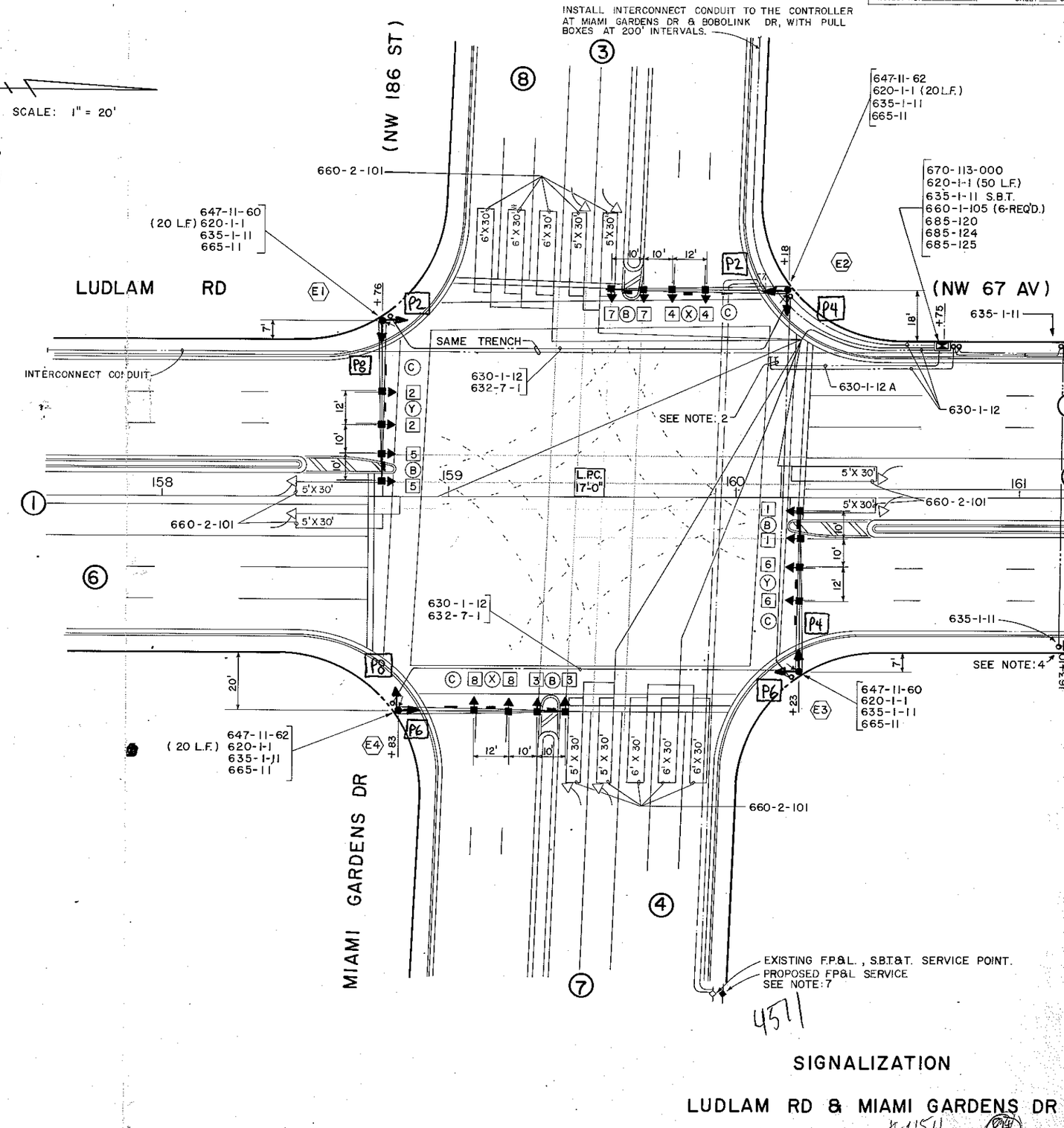

NOTES:

1. THE DEMAND WATTAGE FOR THIS INTERSECTION IS 2185 WATTS.
2. CONTRACTOR SHALL PICK-UP F.P.&L. AND S.B.T.&T. SERVICE FROM EXISTING CONTROLLER LOCATION.
3. SEE PAVEMENT MARKING PLANS FOR INTERCONNECT CONDUIT & PULL BOXES.
4. CONTRACTOR SHALL RUN CONDUIT & INSTALL PULL BOX AT PROPOSED S.B.T. MANHOLE STA. 163+10 FOR FUTURE S.B.T. PICK-UP POINT. MR. J. Mc LAUGHLIN TEL. 623-1952.
5. THE CONTRACTOR SHALL BE SOLELY RESPONSIBLE FOR KEEPING THE SIGNAL ONLINE THROUGH OUT THE DURATION OF THE CONTRACT. PRIOR TO TRANSFERING INTERSECTION CONTROL TO THE NEW CABINET, THE CONTRACTOR MUST CONFIRM THAT S.B.T.&T. SERVICE IS FUNCTIONAL AT THE NEW CABINET, OVER EITHER TEMPORARY OR PERMANENT CABLE, TEMPORARY CABLE SHALL BE PAID FOR WITH ITEM NO. 660-2-101.
6. INSTALL R10-3A SIGN ABOVE PUSHBUTTON, 4-REQ'D.
7. CONTRACTOR SHALL RELOCATE TRAFFIC SIGNAL SERVICE FROM EXISTING TO PROPOSED LOCATION AS SHOWN ON PLAN. COST TO BE INCLUDED IN ITEM NO. 639-3-11.

SIGNALIZATION

LUDLAM RD & MIAMI GARDENS DR

#4511 (84)

TOD Schedule Report

for 4511: Ludlam Rd&Miami Gardens Dr

Print Date: 11/17/2013

Print Time: 8:07 AM

Asset	Intersection	TOD Schedule	Op Mode	Plan #	Cycle	Offset	TOD Setting	Active PhaseBank	Active Maximum
4511	Ludlam Rd&Miami Gardens Dr	DOW-1		N/A	0	0	N/A	0	Max 0

Splits

PH 1	PH 2	PH 3	PH 4	PH 5	PH 6	PH 7	PH 8
NBL	SBT	EBL	WBT	SBL	NBT	WBL	EBT
0	0	0	0	0	0	0	0

Active Phase Bank: Phase Bank 1

Phase		Walk	Don't Walk	Min Initial	Veh Ext	Max Limit	Max 2	Yellow	Red
		Phase Bank 1 2 3	1 2 3	1 2 3	1 2 3	1 2 3	1 2 3		
1	NBL	0 - 0 - 0	0 - 0 - 0	5 - 5 - 5	2 - 2 - 2	10 - 15 - 8	20 - 16 - 16	4	0
2	SBT	7 - 0 - 7	36 - 0 - 36	7 - 18 - 7	1 - 1 - 1	35 - 45 - 30	0 - 40 - 40	4	1.6
3	EBL	0 - 0 - 0	0 - 0 - 0	5 - 5 - 5	2.5 - 2.5 - 2.5	10 - 15 - 8	20 - 16 - 16	4	0
4	WBT	7 - 0 - 7	31 - 0 - 31	12 - 12 - 12	3 - 3 - 3	25 - 40 - 25	45 - 48 - 40	4	1.6
5	SBL	0 - 0 - 0	0 - 0 - 0	5 - 5 - 5	2 - 2 - 2	10 - 15 - 8	20 - 16 - 16	4	0
6	NBT	7 - 0 - 7	36 - 0 - 36	7 - 18 - 7	1 - 1 - 1	35 - 45 - 30	0 - 40 - 40	4	1.6
7	WBL	0 - 0 - 0	0 - 0 - 0	5 - 5 - 5	2.5 - 2.5 - 2.5	10 - 15 - 8	20 - 16 - 16	4	0
8	EBT	7 - 0 - 7	31 - 0 - 31	12 - 12 - 12	3 - 3 - 3	25 - 40 - 25	45 - 48 - 40	4	1.6

Last In Service Date: unknown

Permitted Phases

	12345678
Default	12345678
External Permit 0	--------
External Permit 1	--------
External Permit 2	--------

Current TOD Schedule	Plan	Cycle	Green Time 1 NBL	2 SBT	3 EBL	4 WBT	5 SBL	6 NBT	7 WBL	8 EBT	Ring Offset	Offset
	2	120	12	40	16	32	12	40	16	32	0	0
	3	140	12	54	28	26	12	54	28	26	0	0
	4	100	12	28	16	24	12	28	16	24	0	0
	5	150	14	58	22	36	14	58	22	36	0	0
	6	140	12	54	28	26	12	54	28	26	0	16
	7	120	12	44	14	30	12	44	14	30	0	50
	8	180	15	46	54	45	15	46	54	45	0	0
	10	130	12	54	14	30	12	54	14	30	0	50
	11	110	10	42	24	14	10	42	24	14	0	0
	12	110	10	42	24	14	10	42	24	14	0	0
	13	120	16	42	16	26	16	42	16	26	0	58
	15	140	16	48	24	32	16	48	24	32	0	60
	17	110	12	34	20	24	12	34	20	24	0	0
	20	120	16	42	16	26	16	42	16	26	0	58
	21	90	8	30	12	20	8	30	12	20	0	0

Local TOD Schedule

Time	Plan	DOW
0000	Free	Su M T W Th F S
0530	6	M T W Th F
0700	8	M T W Th F
0845	10	M T W Th F
0900	10	Su S
1345	8	M T W Th F
1530	15	M T W Th F
1930	20	M T W Th F
2200	Free	Su M T W Th F S

Current Time of Day Function

Time	Function	Settings *	Day of Week
0000	TOD OUTPUTS	-7------	SuM T W ThF S

Local Time of Day Function

Time	Function	Settings *	Day of Week
0000	TOD OUTPUTS	-7------	SuM T W ThF S
0700	VEH MAX RECALL	8---4---	M T W ThF
0700	TOD OUTPUTS	-------1	M T W ThF
0845	TOD OUTPUTS	-7------	M T W ThF
0845	VEH MAX RECALL	--------	M T W ThF
1345	TOD OUTPUTS	-------1	M T W ThF
1530	TOD OUTPUTS	-7------	M T W ThF

*** Settings**

Blank - FREE - Phase Bank 1, Max 1
Blank - Plan - Phase Bank 1, Max 2
1 - Phase Bank 2, Max 1
2 - Phase Bank 2, Max 2
3 - Phase Bank 3, Max 1
4 - Phase Bank 3, Max 2
5 - EXTERNAL PERMIT 1
6 - EXTERNAL PERMIT 2
7 - X-PED OMIT
8 - TBA

No Calendar Defined/Enabled

SIGNAL OPERATING PLAN

PHASE	INT	SIGNAL HEAD NUMBER 1	2	3	4	5	6	7	8	P2	P4	P6	P8
Ø1+5 N/S LT'S LUDLAM (ACTUATED)	R/W	←	R	↚	R	←	R	↚	R	DW	DW	DW	DW
	Ø TO CLEAR 1+6	←	R	↚	R	↙	R	↚	R	DW	DW	DW	DW
	Ø TO CLEAR 2+5	↙	R	↚	R	←	R	↚	R	DW	DW	DW	DW
	Ø TO CLEAR 2+6	↙	R	↚	R	↙	R	↚	R	DW	DW	DW	DW
Ø1+6 NB OVERLAP LUDLAM ACTUATED	R/W	←	R	↚	R	↚	G	↚	R	DW	DW	DW	DW
	Ø TO CLEAR 2+6	↙	R	↚	R	↚	G	↚	R	DW	DW	DW	DW
Ø2+5 SB OVERLAP LUDLAM (ACTUATED)	R/W	↚	G	↚	R	←	R	↚	R	DW	DW	DW	DW
	Ø TO CLEAR 2+6	↚	G	↚	R	↙	R	↚	R	DW	DW	DW	DW
	PED MODE I												
Ø2+6 N/S THRU LUDLAM (RECALL)	R/W	↚	G	↚	R	↚	G	↚	R	DW	DW	DW	DW
	Ø TO CLEAR X-PED	↚	Y	↚	R	↚	Y	↚	R	DW	DW	DW	DW
	Ø TO CLEAR 3+7	↚	Y	↚	R	↚	Y	↚	R	DW	DW	DW	DW
	Ø TO CLEAR 3+8	↚	Y	↚	R	↚	Y	↚	R	DW	DW	DW	DW
	Ø TO CLEAR 4+7	↚	Y	↚	R	↚	Y	↚	R	DW	DW	DW	DW
	Ø TO CLEAR 4+8	↚	Y	↚	R	↚	Y	↚	R	DW	DW	DW	DW
	Ø TO CLEAR 1+5	↚	Y	↚	R	↚	Y	↚	R	DW	DW	DW	DW

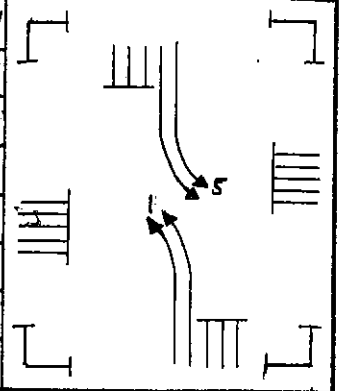

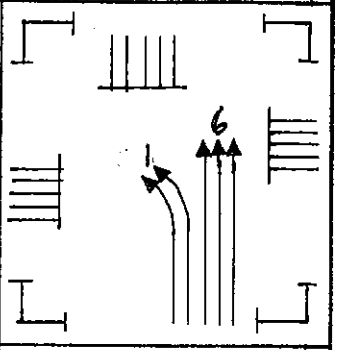

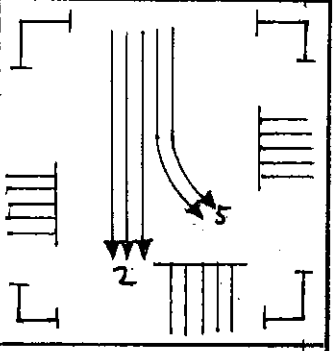

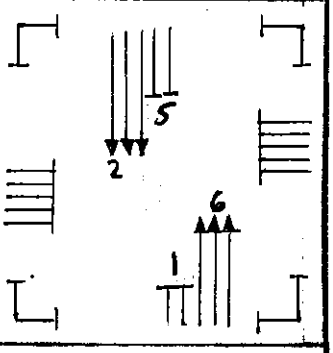

Drawn	Date 11/3/93	METROPOLITAN DADE COUNTY DEPARTMENT OF PUBLIC WORKS	SHEET 1 OF 5
Check H. HERNANDEZ	Date 11/3/93	ASSET NO: 4511	
Division Engineer	Date	LUDLAM RD & MIAMI GARDENS DR.	
Placed in Service Date: 11/10/93 By: JHOF	—		Phasing Number 5

SIGNAL OPERATING PLAN

PHASE	INT	1	2	3	4	5	6	7	8	P2	P4	P6	P8
	R/W												
	CLEAR TO												
X-PED	R/W	~~R~~	R	~~R~~	R	~~R~~	R	~~R~~	R	W/FDW	W/FDW	W/FDW	W/FDW
	CLEAR TO ∅ 3+7	~~R~~	R	~~R~~	R	~~R~~	R	~~R~~	R	DW	DW	DW	DW
	3+8	~~R~~	R	~~R~~	R	~~R~~	R	~~R~~	R	DW	DW	DW	DW
	4+7	~~R~~	R	~~R~~	R	~~R~~	R	~~R~~	R	DW	DW	DW	DW
	4+8	~~R~~	R	~~R~~	R	~~R~~	R	~~R~~	R	DW	DW	DW	DW
	1+5	~~R~~	R	~~R~~	R	~~R~~	R	~~R~~	R	DW	DW	DW	DW
	1+6	~~R~~	R	~~R~~	R	~~R~~	R	~~R~~	R	DW	DW	DW	DW
	2+5	~~R~~	R	~~R~~	R	~~R~~	R	~~R~~	R	DW	DW	DW	DW
	2+6	~~R~~	R	~~R~~	R	~~R~~	R	~~R~~	R	DW	DW	DW	DW
	CLEAR TO												
	R/W												
	CLEAR TO												

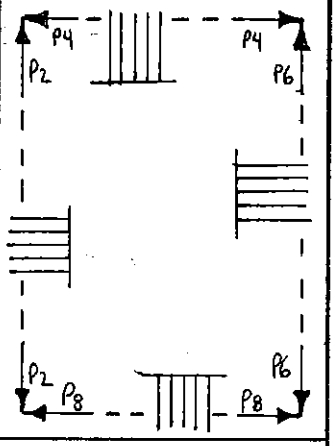

PED MODE I

Drawn	Date	METROPOLITAN DADE COUNTY DEPARTMENT OF PUBLIC WORKS	SHEET 2 OF 5
[signature]	11/3/93	ASSET NO: 4511	
Check: H. HERNANDEZ	Date: 11/3/93	LUDLAM RD & MIAMI GARDENS DR.	
Division Engineer	Date		
		Placed in Service: Date: 11/10/93 By: SHOP	Phasing Number: 5

SIGNAL OPERATING PLAN

PHASE	INT	SIGNAL HEAD NUMBER														
			1	2		3	4		5	6		7	8	P_2	P_4	P_6	P_8
ϕ3+7 E/W LT'S MIAMI GARDENS (ACTUATED)	R/W		←R	R		←	R		←R	R		←	R	DW	DW	DW	DW
	ϕ TO CLEAR 3+8		←R	R		←	R		←R	R		←Y	R	DW	DW	DW	DW
	ϕ TO CLEAR 4+7		←R	R		←Y	R		←R	R		←	R	DW	DW	DW	DW
	ϕ TO CLEAR 4+8		←R	R		←Y	R		←R	R		←Y	R	DW	DW	DW	DW
ϕ3+8 EB OVERLAP MIAMI GARDENS (ACTUATED)	R/W		←R	R		←	R		←R	R		←R	G	DW	DW	DW	DW
	ϕ TO CLEAR 4+8		←R	R		←Y	R		←R	R		←R	G	DW	DW	DW	DW
ϕ4+7 WB OVERLAP MIAMI GARDENS (ACTUATED)	R/W		←R	R		←R	G		←R	R		←	R	DW	DW	DW	DW
	ϕ TO CLEAR 4+8		←R	R		←R	G		←R	R		←Y	R	DW	DW	DW	DW
ϕ4+8 E/W THRU MIAMI GARDENS (ACTUATED)	R/W		←R	R		←R	G		←R	R		←R	G	DW	DW	DW	DW
	ϕ TO CLEAR 1+5		←R	R		←R	Y		←R	R		←R	Y	DW	DW	DW	DW
	ϕ TO CLEAR 1+6		←R	R		←R	Y		←R	R		←R	Y	DW	DW	DW	DW
	ϕ TO CLEAR 2+5		←R	R		←R	Y		←R	R		←R	Y	DW	DW	DW	DW
	ϕ TO CLEAR 2+6		←R	R		←R	Y		←R	R		←R	Y	DW	DW	DW	DW

PED MODE I

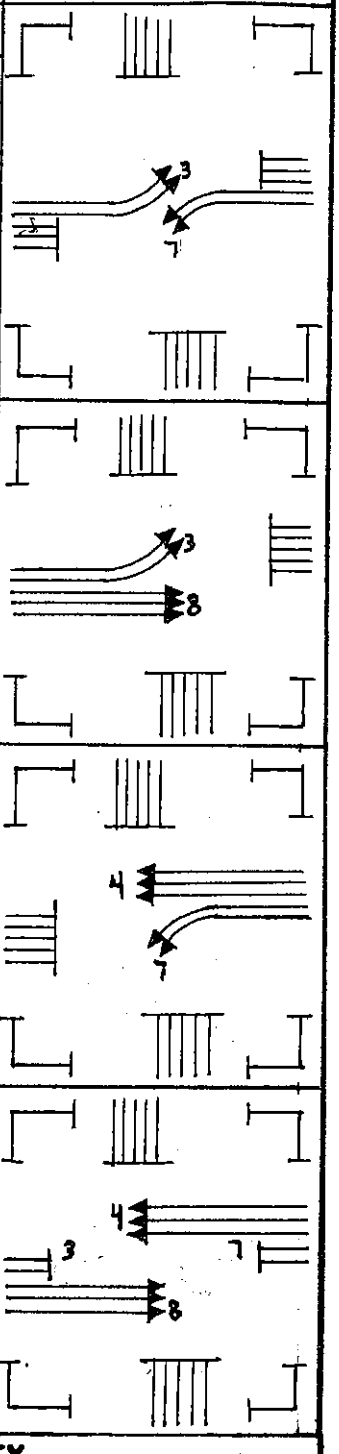

Drawn J.C.P.	Date 11/3/93	METROPOLITAN DADE COUNTY DEPARTMENT OF PUBLIC WORKS SHEET 3 OF 5
Check H. HERNANDEZ	Date 11/3/93	ASSET NO: 4511
Division Engineer	Date	LUDLAM RD & MIAMI GARDENS DR.

Placed in Service			Phasing Number
Date: 11/10/93	By: SHOP	—	5

SIGNAL OPERATING PLAN

PHASE	INT	SIGNAL HEAD NUMBER 1	2	3	4	5	6	7	8	P2	P4	P6	P8
Ø1+5 N/S LT'S LUDLAM (ACTUATED)	R/W	←	R	←R	R	←	R	←R	R	DW	DW	DW	DW
	CLEAR TO Ø 1+6	←	R	←R	R	←Y	R	←R	R	DW	DW	DW	DW
	2+5	←Y	R	←R	R	←	R	←R	R	DW	DW	DW	DW
	2+6	←Y	R	←R	R	←Y	R	←R	R	DW	DW	DW	DW
Ø1+6 NB OVERLAP LUDLAM (ACTUATED)	R/W	←	R	←R	R	←R	G	←R	R	DW	DW	W	DW
	CLEAR TO Ø 2+6	←Y	R	←R	R	←R	G	←R	R	DW	DW	W	DW
Ø2+5 SB OVERLAP LUDLAM (ACTUATED)	R/W	←R	G	←R	R	←	R	←R	R	W	DW	DW	DW
	CLEAR TO Ø 2+6	←R	G	←R	R	←Y	R	←R	R	W	DW	DW	DW
Ø2+6 N/S THRU LUDLAM (RECALL)	R/W	←R	G	←R	R	←R	G	←R	R	W/FDW	DW	W/FDW	DW
	CLEAR TO Ø 3+7	←R	Y	←R	R	←R	Y	←R	R	DW	DW	DW	DW
	3+8	←R	Y	←R	R	←R	Y	←R	R	DW	DW	DW	DW
	4+7	←R	Y	←R	R	←R	Y	←R	R	DW	DW	DW	DW
	4+8	←R	Y	←R	R	←R	Y	←R	R	DW	DW	DW	DW
	1+5	←R	Y	←R	R	←R	Y	←R	R	DW	DW	DW	DW

PED MODE II

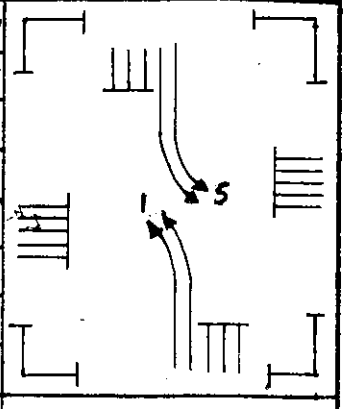

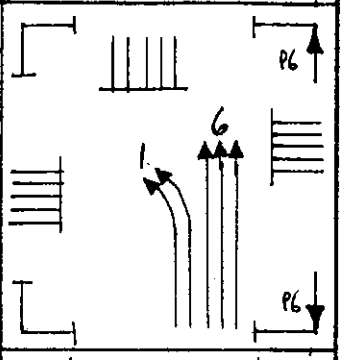

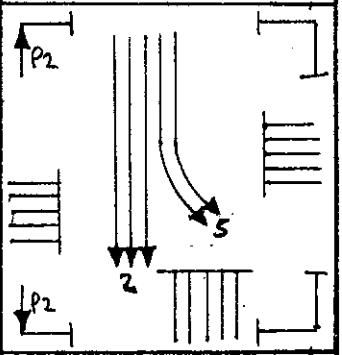

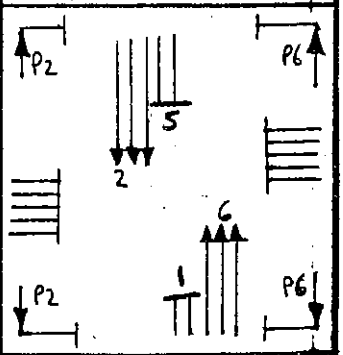

Drawn	Date
[signature]	11/3/93
Check	**Date**
H. HERNANDEZ	11/3/93
Division Engineer	**Date**

METROPOLITAN DADE COUNTY
DEPARTMENT OF PUBLIC WORKS

SHEET 4 OF 5

ASSET NO: 4511

LUDLAM RD & MIAMI GARDENS DR.

Placed in Service		Phasing Number
Date: 11/10/93 By: SHOP	—	5

SIGNAL OPERATING PLAN

PHASE	INT	SIGNAL HEAD NUMBER: 1	2	3	4	5	6	7	8	P2	P4	P6	P8
ϕ3+7 E/W LT'S MIAMI GARDENS (ACTUATED)	R/W	←R	R	←	R	←R	R	←	R	DW	DW	DW	DW
	ϕ TO CLEAR 3+8	←R	R	←	R	←R	R	←Y	R	DW	DW	DW	DW
	ϕ TO CLEAR 4+7	←R	R	←Y	R	←R	R	←	R	DW	DW	DW	DW
	ϕ TO CLEAR 4+8	←R	R	←Y	R	←R	R	←Y	R	DW	DW	DW	DW
ϕ3+8 EB OVERLAP MIAMI GARDENS (ACTUATED)	R/W	←R	R	←	R	←R	R	←R	G	DW	DW	DW	W
	ϕ TO CLEAR 4+8	←R	R	←Y	R	←R	R	←R	G	DW	DW	DW	W
ϕ4+7 WB OVERLAP MIAMI GARDENS (ACTUATED)	R/W	←R	R	←R	G	←R	R	←	R	DW	W	DW	DW
	ϕ TO CLEAR 4+8	←R	R	←R	G	←R	R	←Y	R	DW	W	DW	DW
ϕ4+8 E/W THRU MIAMI GARDENS (ACTUATED)	R/W	←R	R	←R	G	←R	R	←R	G	DW	W/FDW	DW	W/FDW
	ϕ TO CLEAR 1+5	←R	R	←R	Y	←R	R	←R	Y	DW	DW	DW	DW
	ϕ TO CLEAR 1+6	←R	R	←R	Y	←R	R	←R	Y	DW	DW	DW	DW
	ϕ TO CLEAR 2+5	←R	R	←R	Y	←R	R	←R	Y	DW	DW	DW	DW
	ϕ TO CLEAR 2+6	←R	R	←R	Y	←R	R	←R	Y	DW	DW	DW	DW
				PED MODE II									
FLASHING OPERATION		←R	R	←R	R	←R	R	←R	R				

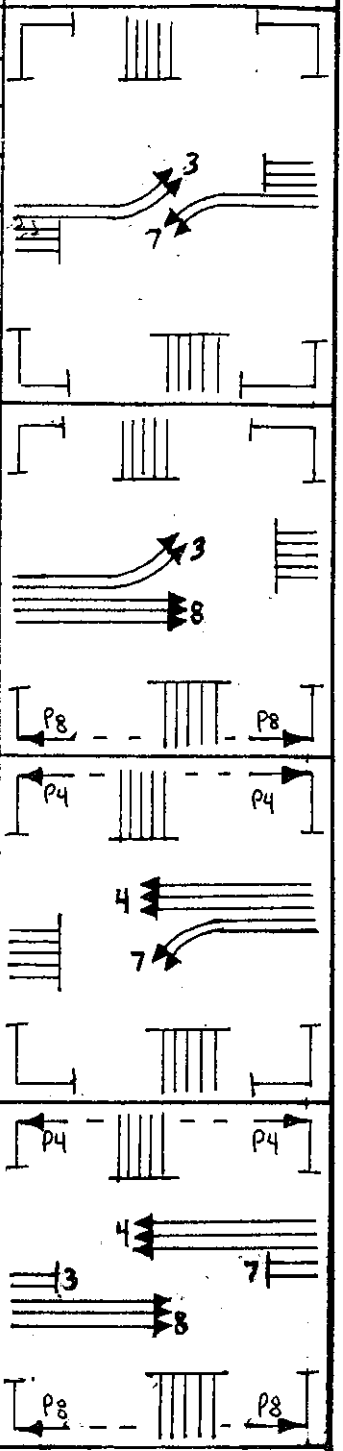

Drawn: J.C.P. — Date: 11/3/93

Check: H. HERNANDEL — Date: 11/3/93

Division Engineer — Date

METROPOLITAN DADE COUNTY
DEPARTMENT OF PUBLIC WORKS

SHEET 5 OF 5

ASSET NO: 4511

LUDLAM RD & MIAMI GARDENS DR.

Placed in Service		Phasing Number
Date: 11/10/93	By: Stol	5

TOD Schedule Report
for 6757: Miami Gardens Dr&NW 62 Av

Print Date: 10/11/2016

Print Time 5:00 PM

Asset	Intersection	TOD Schedule	Op Mode	Plan #	Cycle	Offset	TOD Setting	Active PhaseBank	Active Maximum
6757	Miami Gardens Dr&NW 62 Av	DOW-3	TOD	[06] MID-MORNING	180	122	N/A	1	Max 2

Splits

PH 1	PH 2	PH 3	PH 4	PH 5	PH 6	PH 7	PH 8
EBL	WBT	SBL	NBT	-	EBT	NBL	SBT
10	112	10	23	0	128	0	39

Active Phase Bank: Phase Bank 1

Phase	Walk Phase Bank 1	2	3	Don't Walk 1	2	3	Min Initial 1	2	3	Veh Ext 1	2	3	Max Limit 1	2	3	Max 2 1	2	3	Yellow	Red
1 EBL	0	0	0	0	0	0	7	7	7	2	2	2	7	7	7	18	15	15	4.4	2
2 WBT	0	0	0	0	0	0	16	16	16	1	1	1	35	35	35	0	40	40	4.4	2
3 SBL	0	0	0	0	0	0	7	7	7	2	2	2	7	7	7	12	10	10	3.7	2
4 NBT	7	7	7	12	12	12	7	7	7	2.5	-2.5	2.5	26	26	26	45	40	40	4	2.5
5 -	0	0	0	0	0	0	0	0	0	0	0	0	0	0	0	0	0	0	0	0
6 EBT	0	0	0	0	0	0	16	16	16	1	1	1	35	35	35	0	40	40	4.4	2
7 NBL	0	0	0	0	0	0	7	7	7	2	2	2	7	7	7	12	10	10	3.7	2
8 SBT	7	7	7	12	12	12	7	7	7	2.5	-2.5	2.5	26	26	26	45	40	40	4	2.5

Last In Service Date: unknown

Permitted Phases

	12345678
Default	1234-678
External Permit 0	--------
External Permit 1	-2-4-6-8
External Permit 2	-2-4-6-8

TOD Schedule Report
for 6757: Miami Gardens Dr&NW 62 Av

Print Date: 10/11/2016

Print Time 5:00 PM

Current TOD Schedule	Plan	Cycle	Green Time 1 EBL	2 WBT	3 SBL	4 NBT	5 -	6 EBT	7 NBL	8 SBT	Ring Offset	Offset
	Flash											
0500	Free											
0600	2	180	13	107	9	26	0	126	9	26	0	24
0700	8	180	13	107	9	26	0	126	9	26	0	24
0845	24	180	10	112	10	23	0	128	0	39	0	102
1000	4	120	8	49	8	30	0	64	8	30	0	87
1545	6	180	10	112	10	23	0	128	0	39	0	122
1900	Free											
	1	130	15	59	9	22	0	81	9	22	0	109
	3	100	8	32	8	27	0	47	8	27	0	42
	5	100	7	37	8	23	0	51	8	23	0	62
	7	130	7	61	9	28	0	75	9	28	0	117
	9	180	9	108	12	26	0	123	8	30	0	163
	18	110	10	46	8	21	0	63	8	21	0	40
	19	130	10	67	9	19	0	84	0	34	0	120
	20	140	8	69	11	27	0	84	11	27	0	24

Local TOD Schedule

Time	Plan	DOW
0000	Flash	Su M T W Th F S
0500	Free	Su M T W Th F S
0600	2	M T W Th F
0600	Free	Su S
0700	8	M T W Th F
0845	24	M T W Th F
0900	20	Su S
1000	4	M T W Th F
1545	6	M T W Th F
1900	Free	M T W Th F
2200	Free	Su S

Current Time of Day Function

Time	Function	Settings *	Day of Week
0000	TOD OUTPUTS	--------	SuM T W ThF S

Local Time of Day Function

Time	Function	Settings *	Day of Week
0000	TOD OUTPUTS	--------	SuM T W ThF S

*** Settings**

Blank - FREE - Phase Bank 1, Max 1
Blank - Plan - Phase Bank 1, Max 2
1 - Phase Bank 2, Max 1
2 - Phase Bank 2, Max 2
3 - Phase Bank 3, Max 1
4 - Phase Bank 3, Max 2
5 - EXTERNAL PERMIT 1
6 - EXTERNAL PERMIT 2
7 - X-PED OMIT
8 - TBA

No Calendar Defined/Enabled

EXISTING SIGNAL DISPLAY DETAILS

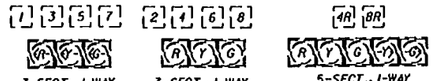

EXISTING PEDESTRIAN HEAD DETAILS

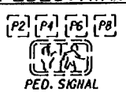

PED. SIGNAL
1-SECT., 1-WAY
(TO BE REMOVED)

PEDESTRIAN HEAD DETAILS

PED. SIGNAL
COUNT-DOWN
1-SECT., 1-WAY
8 AS.

653-191

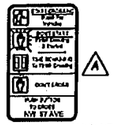

R10-3E (COUNTY MODIFIED)
(9"X15")
(4 EA.)
(INCLUDED IN COST
OF PAY ITEM 665-11)

NOTE: ALL PEDESTRIAN SIGNAL HEADS SHALL ALIGH WITH THE CENTER OF FAR SIDE END OF THE CORRESPONDING CROSSWALK THEY SERVE.

SIGNAL OPERATING PLAN

SOP 10 MODIFIED

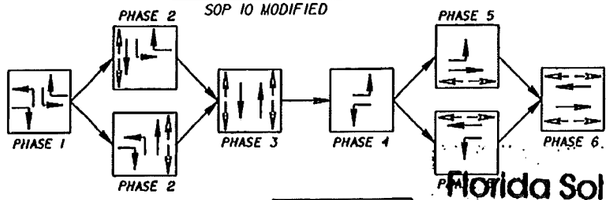

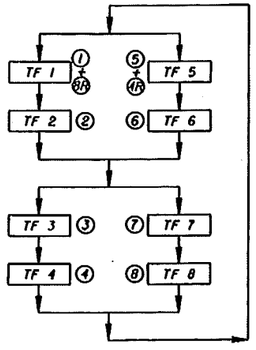

Florida Sol Systems Inc

AS-BUILT

DATE: 11-19-13

ALUMINUM PEDESTAL
STA. 240+60.00, 71.00' LT.

635-1-11	(1 EA.)
653-191	(1 AS.)
659-107	(1 EA.)
665-11	(1 EA.)

10/7/2013
P.E #41896

EXISTING MAST ARM
(TO REMAIN)
EXISTING PEDESTRIAN HEADS
AND BUTTON
(TO BE REMOVED)

690-20	(2 EA.)
690-70	(1 EA.)

EXISTING PULL BOX
(TO BE REPLACED)
(TRAFFIC SIGNAL)

635-1-11	(1 EA.)

EXISTING PULL BOX
(TO BE REPLACED)
(STREET LIGHT)

715-14-12	(1 EA.)

Traffic signal

635-1-11	(1 EA.)
653-191	(1 AS.)
659-107	(1 EA.)

ALUMINUM PEDESTAL
STA. 240+53.00, 58.00' LT.

R/W LINE

MIAMI GARDENS DRIVE (NW 183rd ST)

NW 57th AVE (N RED RD)

3" STEEL GAS MAIN

ALUMINUM PEDESTAL
STA. 66+72.00, 83.00' LT.

635-1-11	(1 EA.)
653-191	(1 AS.)
659-107	(1 EA.)
665-11	(1 EA.)

EXISTING PULL BOX
(TO BE REPLACED)
(TRAFFIC SIGNAL)

635-1-11	(1 EA.)

EXISTING MAST ARM
(TO REMAIN)
EXISTING PEDESTRAIN HEAD P6
(TO BE REMOVED
AND REPLACED)

653-191	(1 AS.)
690-20	(1 EA.)

EXISTING P4 PEDESTRIAN BUTTON AND HEAD
(TO BE REMOVED)

690-20	(1 EA.)
690-70	(1 EA.)

EXISTING PULL BOX
(TO BE REPLACED)
(TRAFFIC SIGNAL)

635-1-11	(1 EA.)

630-1-13 (37 L.F.)
630-1-13 (12 L.F.)
630-1-13 (34 L.F.)
630-1-13 (25 L.F.)
630-1-13 (20 L.F.)

EXISTING PULL BOXES
(TO BE REPLACED)
(TRAFFIC SIGNAL)

635-1-11	(2 EA.)

632-7-1 (1 P.I.)
EXISTING CONTROLLER CABINET
(TO REMAIN)

635-1-11	(1 EA.)
653-191	(1 AS.)
659-107	(1 EA.)

ALUMINUM PEDESTAL
STA. 240+55.00, 70.00' RT.

EXISTING MAST ARM
(TO REMAIN)
EXISTING P8 PEDESTRAIN HEAD
(TO BE REMOVED)
EXISTING P2 PEDESTRAIN HEAD
(TO BE REMOVED)
EXISTING P8 PEDESTRIAN BUTTON
(TO BE REMOVED)

690-20	(2 EA.)
690-70	(1 EA.)

ALUMINUM PEDESTAL
240+63.00, 76.00' RT.

635-1-11	(1 EA.)
653-191	(1 AS.)
659-107	(1 EA.)
665-11	(1 EA.)

ALUMINUM PEDESTAL
STA. 66+94.00, 47.00' RT.

635-1-11	(1 EA.)
653-191	(1 AS.)
659-107	(1 EA.)

EXISTING PULL BOX
(TO BE REPLACED)
(TRAFFIC SIGNAL)

635-1-11	(1 EA.)

EXISTING MAST ARM
(TO REMAIN)
EXISTING PEDESTRIAN HEADS
AND BUTTON
(TO BE REMOVED)

690-20	(2 EA.)
690-70	(1 EA.)

ALUMINUM PEDESTAL
STA. 66+71.00, 71.00' RT.

635-1-11	(1 EA.)
653-191	(1 AS.)
659-107	(1 EA.)
665-11	(1 EA.)

EXISTING ELECTRICAL SERVICE POINT LOCATED ON 2nd CONCRETE POWER POLE SOUTH OF THE INTERSECTION ON THE EAST SIDE

@ SR-860

0 10 40
Feet

CONTROLLER OPERATIONS

1. MAJOR STREET: N.W. 57th AVENUE (RED ROAD)
   MINOR STREET: SR 860 (MIAMI GARDENS DRIVE) (NW 183rd STREET)
2. PHASE 1, 2, 4, 5 AND 6 ACTUATED, PHASE 3 RECALL
   PEDESTRIAN SIGNALS P2 AND P6 COME UP AT EVERY CYCLE
   PEDESTRIAN SIGNALS P4 AND P8 UPON ACTUATION ONLY
3. FLASHING OPERATION: N.W. 57th AVENUE (RED ROAD) - YELLOW (2 & 6)
   N.W. 183rd STREET (MIAMI GARDENS DRIVE) - RED (ALL MOVEMENTS)
   N.W. 57th AVENUE (RED ROAD) - RED (1 & 5)
4. EXISTING SIGNAL OPERATING PLAN 10 MODIFIED TO REMAIN.

REMOVAL ITEMS		
PAY ITEM	UNIT	QUANT.
690-20	EA.	8
690-70	EA.	4
690-90	P.I.	1
690-100	P.I.	1
*700-48-60	EA.	4

*EXISTING PEDESTRIAN SIGNS

SR 860 (MIAMI GARDENS DRIVE) & N.W. 57th AVENUE
INTERSECTION #4264

NOTICE: THE ORIGINAL OF THIS SHEET IS THE ELECTRONIC FILE SIGNED AND SEALED UNDER RULE 61G15-23.003, F.A.C.

8/4/2013

REVISIONS			
DATE	DESCRIPTION	DATE	DESCRIPTION
8-28-13	1 REVISED STATION/OFFSET.		

WAEL F. MIQDADI, P.E. NO. 42646
Progressive Design & Engineering, Inc.
10891 La Reina Road Suite 100 Delray Beach, FL 33446
Tel: 561-459-2304 Fax: 561-452-2303
CERTIFICATE OF AUTHORIZATION NO. 7151

STATE OF FLORIDA
DEPARTMENT OF TRANSPORTATION

ROAD NO.	COUNTY	FINANCIAL PROJECT ID
860	MIAMI-DADE	427518-1-52-01

SIGNALIZATION PLAN

SHEET NO. T-4

gary 9/4/2013 9:02:40 AM Z:\Projects\PDSEProj\Bolton Perez\427518132011rev4\signals\PLANS001.dgn

TOD Schedule Report

for 4264: Miami Gardens Dr&Red Rd

Print Date: 8/17/2013

Print Time: 4:18 PM

Asset	Intersection	TOD Schedule	Op Mode	Plan #	Cycle	Offset	TOD Setting	Active PhaseBank	Active Maximum
4264	Miami Gardens Dr&Red Rd	DOW-7		N/A	0	0	N/A	0	Max 0

Splits

PH 1	PH 2	PH 3	PH 4	PH 5	PH 6	PH 7	PH 8
NBL	SBT	EBL	WBT	SBL	NBT	WBL	EBT
0	0	0	0	0	0	0	0

Active Phase Bank: Phase Bank 1

Phase		Walk Phase Bank 1 2 3	Don't Walk 1 2 3	Min Initial 1 2 3	Veh Ext 1 2 3	Max Limit 1 2 3	Max 2 1 2 3	Yellow	Red
1	NBL	0 - 0 - 0	0 - 0 - 0	5 - 5 - 5	2 - 2 - 2	15 - 15 - 15	60 - 50 - 50	3	1.8
2	SBT	7 - 7 - 7	22 - 22 - 22	7 - 7 - 7	1 - 1 - 1	50 - 50 - 50	0 - 80 - 80	4.4	1.4
3	EBL	0 - 0 - 0	0 - 0 - 0	5 - 5 - 5	2 - 2 - 2	15 - 15 - 15	60 - 50 - 50	3	1.8
4	WBT	7 - 7 - 7	22 - 22 - 22	7 - 7 - 7	2.5 - 2.5 - 2.5	30 - 30 - 30	90 - 80 - 80	4	1.6
5	SBL	0 - 0 - 0	0 - 0 - 0	5 - 5 - 5	2 - 2 - 2	15 - 15 - 15	60 - 50 - 50	3	1.8
6	NBT	7 - 7 - 7	22 - 22 - 22	7 - 7 - 7	1 - 1 - 1	50 - 50 - 50	0 - 80 - 80	4.4	1.4
7	WBL	0 - 0 - 0	0 - 0 - 0	5 - 5 - 5	2 - 2 - 2	15 - 15 - 15	60 - 50 - 50	3	1.8
8	EBT	7 - 7 - 7	22 - 22 - 22	7 - 7 - 7	2.5 - 2.5 - 2.5	30 - 30 - 30	90 - 80 - 80	4	1.6

Current TOD Schedule	Plan	Cycle	Green Time 1 NBL	2 SBT	3 EBL	4 WBT	5 SBL	6 NBT	7 WBL	8 EBT	Ring Offset	Offset
	1	165	24	61	25	33	24	61	25	33	0	72
	2	150	19	60	17	32	19	60	17	32	0	62
	3	135	19	49	17	28	19	49	17	28	0	134
	4	180	29	65	25	39	29	65	25	39	0	64
	5	185	36	56	29	42	36	56	29	42	0	58
	6	85	7	31	6	19	7	31	6	19	0	32
	7	110	11	43	10	24	11	43	10	24	0	44
	8	115	15	39	15	24	15	39	15	24	0	40
	9	110	9	39	14	26	9	39	14	26	0	40
	11	200	34	81	28	35	34	81	20	43	0	66
	16	110	9	39	14	26	9	39	14	26	0	40
	19	110	9	39	14	26	9	39	14	26	0	40

Last In Service Date: unknown

Permitted Phases

	12345678
Default	12345678
External Permit 0	--------
External Permit 1	--------
External Permit 2	--------

Local TOD Schedule

Time	Plan	DOW
0000	6	Su M T W Th F S
0530	7	M T W Th F
0600	2	M T W Th F
0630	3	Su S
0700	1	M T W Th F
0900	8	Su S
0900	2	M T W Th F
0930	3	M T W Th F
1330	4	M T W Th F
1600	11	M T W Th F
2000	3	Su M T W Th F S

Current Time of Day Function

Time	Function	Settings *	Day of Week
0000	TOD OUTPUTS	--------	SuM T W ThF S

Local Time of Day Function

Time	Function	Settings *	Day of Week
0000	TOD OUTPUTS	--------	SuM T W ThF S

*** Settings**

Blank - FREE - Phase Bank 1, Max 1
Blank - Plan - Phase Bank 1, Max 2
1 - Phase Bank 2, Max 1
2 - Phase Bank 2, Max 2
3 - Phase Bank 3, Max 1
4 - Phase Bank 3, Max 2
5 - EXTERNAL PERMIT 1
6 - EXTERNAL PERMIT 2
7 - X-PED OMIT
8 - TBA

No Calendar Defined/Enabled

SIGNAL OPERATING PLAN

Timing Phases	Direction	Head No.	N 1	N 6	S 5	S 2	E 3	E 8	E 8R	W 7	W 4	W 4R	Ped Heads P6	Ped Heads P2	Ped Heads P8	Ped Heads P4	Movements/Display/Actuation
(1+5) NSLT (Actuated)	Dwell		<G	R	<G	R	<R	R	R/Y>	<R	R	R/Y>	DW	DW	DW	DW	
	Clear to	(1+6)	<G	R	<Y	R	<R	R	R/Y>	<R	R	R/Y>	DW	DW	DW	DW	
		(2+5)	<Y	R	<G	R	<R	R	R/Y>	<R	R	R/Y>	DW	DW	DW	DW	
		(2+6)	<Y	R	<Y	R	<R	R	R/Y>	<R	R	R/Y>	DW	DW	DW	DW	
(1+6) NBLT (Actuated)	Dwell		<G	G	<R	R	<R	R	R/Y>	<R	R	R	W/F	DW	DW	DW	
	Cl	(2+6)	<Y	G	<R	R	<R	R	R/Y>	<R	R	R	DW	DW	DW	DW	
(2+5) SBLT (Actuated)	Dwell		<R	R	<G	G	<R	R	R	<R	R	R/Y>	DW	W/F	DW	DW	
	Cl	(2+6)	<R	R	<Y	G	<R	R	R	<R	R	R/Y>	DW	DW	DW	DW	
(2+6) N-S (Recall)	Dwell		<R	G	<R	G	<R	R	R	<R	R	R	W/F	W/F	DW	DW	
	Clear to	(3+7)	<R	Y	<R	Y	<R	R	R	<R	R	R	DW	DW	DW	DW	
		(3+8)	<R	Y	<R	Y	<R	R	R	<R	R	R	DW	DW	DW	DW	
		(4+7)	<R	Y	<R	Y	<R	R	R	<R	R	R	DW	DW	DW	DW	
		(4+8)	<R	Y	<R	Y	<R	R	R	<R	R	R	DW	DW	DW	DW	
		(1+5)	<R	Y	<R	Y	<R	R	R	<R	R	R	DW	DW	DW	DW	
		(1+6)	<R	G	<R	Y	<R	R	R	<R	R	R	DW	DW	DW	DW	
		(2+5)	<R	Y	<R	G	<R	R	R	<R	R	R	DW	DW	DW	DW	
(3+7) EWLT (Actuated)	Dwell		<R	R	<R	R	<G	R	R	<G	R	R	DW	DW	DW	DW	
	Clear to	(3+8)	<R	R	<R	R	<G	R	R	<Y	R	R	DW	DW	DW	DW	
		(4+7)	<R	R	<R	R	<Y	R	R	<G	R	R	DW	DW	DW	DW	
		(4+8)	<R	R	<R	R	<Y	R	R	<Y	R	R	DW	DW	DW	DW	
		(1+5)	<R	R	<R	R	<Y	R	R	<Y	R	R	DW	DW	DW	DW	
		(1+6)	<R	R	<R	R	<Y	R	R	<Y	R	R	DW	DW	DW	DW	
		(2+5)	<R	R	<R	R	<Y	R	R	<Y	R	R	DW	DW	DW	DW	
		(2+6)	<R	R	<R	R	<Y	R	R	<Y	R	R	DW	DW	DW	DW	
(3+8) EBLT (Actuated)	Dwell		<R	R	<R	R	<G	G	G	<R	R	R	DW	DW	W/F	DW	
	Clear to	(4+8)	<R	R	<R	R	<Y	G	G	<R	R	R	DW	DW	DW	DW	
		(1+5)	<R	R	<R	R	<Y	Y	Y	<R	R	R	DW	DW	DW	DW	
		(1+6)	<R	R	<R	R	<Y	Y	Y	<R	R	R	DW	DW	DW	DW	
		(2+5)	<R	R	<R	R	<Y	Y	Y	<R	R	R	DW	DW	DW	DW	
		(2+6)	<R	R	<R	R	<Y	Y	Y	<R	R	R	DW	DW	DW	DW	
(4+7) WBLT (Actuated)	Dwell		<R	R	<R	R	<R	R	R	<G	G	G	DW	DW	DW	W/F	
	Clear to	(4+8)	<R	R	<R	R	<R	R	R	<Y	G	G	DW	DW	DW	DW	
		(1+5)	<R	R	<R	R	<R	R	R	<Y	Y	Y	DW	DW	DW	DW	
		(1+6)	<R	R	<R	R	<R	R	R	<Y	Y	Y	DW	DW	DW	DW	
		(2+5)	<R	R	<R	R	<R	R	R	<Y	Y	Y	DW	DW	DW	DW	
		(2+6)	<R	R	<R	R	<R	R	R	<Y	Y	Y	DW	DW	DW	DW	
(4+8) E-W (ACTUATED)	Dwell		<R	R	<R	R	<R	G	G	<R	G	G	DW	DW	W/F	W/F	
	Clear	(1+5)	<R	R	<R	R	<R	Y	Y	<R	Y	Y	DW	DW	DW	DW	
		(1+6)	<R	R	<R	R	<R	Y	Y	<R	Y	Y	DW	DW	DW	DW	
		(2+5)	<R	R	<R	R	<R	Y	Y	<R	Y	Y	DW	DW	DW	DW	
		(2+6)	<R	R	<R	R	<R	Y	Y	<R	Y	Y	DW	DW	DW	DW	
Flashing Operation			F<R	FY	F<R	FY	F<R	FR	FR	F<R	FR	FR					Page 1 of 1

N

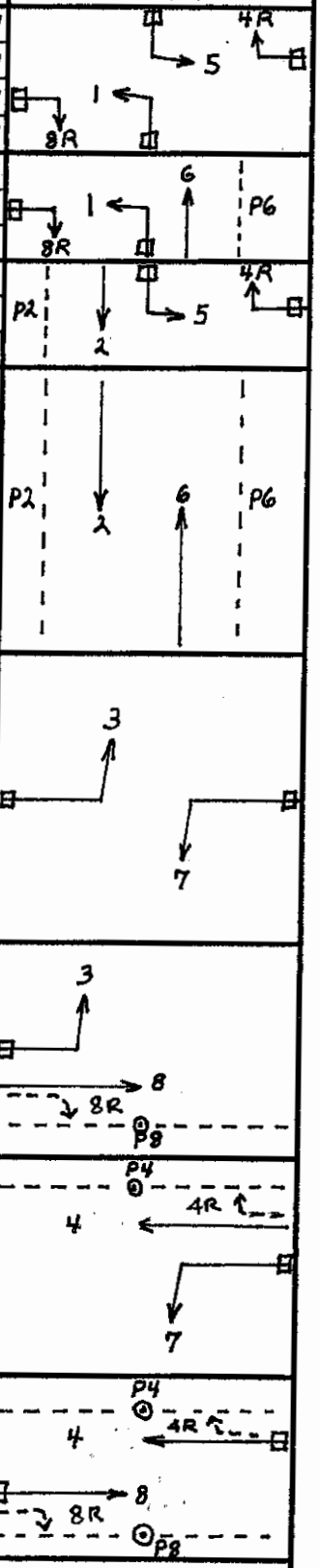

Miami-Dade County Public Works Department

Drawn	Date		
F. PRATS	9/9/02	Miami Gardens Dr & Red Rd	
Checked	Date	Placed in Service	Phasing No. / Asset Number
H. HERNANDEL	9/10/02	Date 9/11/02 By CONTRACTOR	6 / 4264

QuadPOConcPeds

APPENDIX C

Traffic Counts

County: 87
Station: 2518
Description: MIAMI GARDENS DRIVE 200' W OF NW 87 AV
Start Date: 05/03/2016
Start Time: 0000

	Direction: E					Direction: W					Combined
Time	1st	2nd	3rd	4th	Total	1st	2nd	3rd	4th	Total	Total
0000	83	76	63	46	268	40	37	24	26	127	395
0100	41	20	31	32	124	20	23	14	12	69	193
0200	27	19	14	11	71	18	10	12	12	52	123
0300	19	14	9	17	59	12	20	27	23	82	141
0400	15	9	14	15	53	24	35	40	76	175	228
0500	16	24	30	53	123	50	93	157	164	464	587
0600	79	100	151	217	547	224	392	565	685	1866	2413
0700	248	275	262	299	1084	747	807	707	763	3024	4108
0800	297	294	271	239	1101	775	675	700	617	2767	3868
0900	246	263	190	232	931	391	370	361	341	1463	2394
1000	209	222	212	218	861	271	278	284	251	1084	1945
1100	196	248	223	245	912	239	236	218	200	893	1805
1200	248	252	234	271	1005	210	207	217	246	880	1885
1300	269	256	275	294	1094	226	272	260	236	994	2088
1400	297	358	367	401	1423	277	245	269	285	1076	2499
1500	404	425	383	412	1624	249	293	313	322	1177	2801
1600	500	509	516	617	2142	322	264	286	263	1135	3277
1700	600	663	690	614	2567	281	320	311	304	1216	3783
1800	640	635	611	504	2390	294	309	251	265	1119	3509
1900	502	430	437	334	1703	252	267	240	246	1005	2708
2000	386	363	323	278	1350	196	214	155	179	744	2094
2100	297	297	279	271	1144	214	190	151	123	678	1822
2200	251	221	198	160	830	126	106	103	59	394	1224
2300	149	184	170	114	617	119	99	52	41	311	928
24-Hour Totals:					24023					22795	46818

Peak Volume Information

	Direction: E		Direction: W		Combined Directions	
	Hour	Volume	Hour	Volume	Hour	Volume
A.M.	745	1161	715	3052	715	4185
P.M.	1715	2607	1515	1250	1715	3836
Daily	1715	2607	715	3052	715	4185

Truck Percentage 2.63 2.93 2.78

Classification Summary Database

Dir	1	2	3	4	5	6	7	8	9	10	11	12	13	14	15	TotTrk	TotVol
E	166	20148	3073	61	396	49	26	52	45	4	0	0	0	0	3	633	24023
W	214	18961	2952	82	397	72	14	58	43	1	0	0	1	0	0	668	22795

Generated by SPS 5.0.30P

County: 87
Station: 2518
Description: MIAMI GARDENS DRIVE 200' W OF NW 87 AV
Start Date: 05/04/2016
Start Time: 0000

	Direction: E					Direction: W					Combined
Time	1st	2nd	3rd	4th	Total	1st	2nd	3rd	4th	Total	Total
0000	78	89	86	38	291	43	30	30	33	136	427
0100	42	41	25	34	142	13	15	20	18	66	208
0200	30	16	19	16	81	20	14	15	10	59	140
0300	8	12	16	12	48	15	8	13	28	64	112
0400	16	10	27	19	72	22	31	59	62	174	246
0500	24	27	32	44	127	55	98	146	153	452	579
0600	85	105	126	160	476	213	366	544	701	1824	2300
0700	227	298	271	293	1089	756	828	784	798	3166	4255
0800	310	236	258	258	1062	722	643	633	596	2594	3656
0900	269	226	232	224	951	395	399	313	292	1399	2350
1000	207	192	216	193	808	306	254	281	281	1122	1930
1100	196	230	230	219	875	221	221	231	225	898	1773
1200	249	243	239	237	968	208	229	247	216	900	1868
1300	256	290	271	315	1132	206	213	243	228	890	2022
1400	279	302	342	276	1199	261	194	290	245	990	2189
1500	363	309	379	408	1459	238	252	324	286	1100	2559
1600	442	504	523	573	2042	285	274	255	261	1075	3117
1700	611	715	701	691	2718	268	309	308	270	1155	3873
1800	614	639	640	507	2400	264	309	290	279	1142	3542
1900	480	397	386	372	1635	218	250	243	205	916	2551
2000	310	343	296	264	1213	189	177	176	164	706	1919
2100	259	253	253	226	991	138	130	126	105	499	1490
2200	195	222	179	132	728	135	117	105	67	424	1152
2300	132	126	98	97	453	74	64	39	48	225	678
24-Hour Totals:					22960					21976	44936

Peak Volume Information

	Direction: E		Direction: W		Combined Directions	
	Hour	Volume	Hour	Volume	Hour	Volume
A.M.	715	1172	700	3166	715	4304
P.M.	1715	2721	1530	1169	1700	3873
Daily	1715	2721	700	3166	715	4304

Truck Percentage 2.22 2.32 2.27

Classification Summary Database

Dir	1	2	3	4	5	6	7	8	9	10	11	12	13	14	15	TotTrk	TotVol
E	140	19316	2990	62	354	24	3	40	27	0	0	0	0	0	4	510	22960
W	135	18533	2797	61	333	27	0	54	35	0	0	0	0	0	1	510	21976

Generated by SPS 5.0.30P

County: 87
Station: 2518
Description: MIAMI GARDENS DRIVE 200' W OF NW 87 AV
Start Date: 05/05/2016
Start Time: 0000

	Direction: E					Direction: W					Combined
Time	1st	2nd	3rd	4th	Total	1st	2nd	3rd	4th	Total	Total
0000	79	85	66	35	265	47	28	37	19	131	396
0100	41	53	39	30	163	19	18	23	19	79	242
0200	17	22	15	20	74	15	8	13	14	50	124
0300	19	13	13	15	60	14	18	12	18	62	122
0400	18	11	17	16	62	34	32	56	64	186	248
0500	12	27	35	52	126	59	94	173	170	496	622
0600	79	78	138	205	500	213	365	496	719	1793	2293
0700	258	274	258	295	1085	746	759	805	746	3056	4141
0800	308	324	264	258	1154	666	634	661	594	2555	3709
0900	230	233	197	214	874	424	364	369	345	1502	2376
1000	187	196	178	201	762	315	272	296	248	1131	1893
1100	220	229	201	212	862	234	261	249	212	956	1818
1200	252	231	225	249	957	251	237	253	210	951	1908
1300	250	273	305	273	1101	235	262	276	241	1014	2115
1400	290	311	386	407	1394	260	302	314	293	1169	2563
1500	421	422	411	476	1730	281	331	322	377	1311	3041
1600	483	550	566	607	2206	356	343	340	332	1371	3577
1700	626	683	628	600	2537	300	344	352	305	1301	3838
1800	599	513	501	640	2253	310	340	305	302	1257	3510
1900	545	526	451	453	1975	318	268	245	276	1107	3082
2000	403	368	357	314	1442	228	225	202	184	839	2281
2100	316	316	334	310	1276	179	181	178	155	693	1969
2200	282	242	207	191	922	153	148	112	92	505	1427
2300	156	191	175	136	658	118	106	93	98	415	1073
24-Hour Totals:					24438					23930	48368

Peak Volume Information

	Direction: E		Direction: W		Combined Directions	
	Hour	Volume	Hour	Volume	Hour	Volume
A.M.	745	1191	700	3056	700	4141
P.M.	1645	2544	1545	1416	1645	3872
Daily	1645	2544	700	3056	700	4141
Truck Percentage	2.32		2.24		2.28	

Classification Summary Database

Dir	1	2	3	4	5	6	7	8	9	10	11	12	13	14	15	TotTrk	TotVol
E	169	20481	3222	60	381	27	0	61	36	1	0	0	0	0	0	566	24438
W	82	20231	3082	75	343	23	5	42	47	0	0	0	0	0	0	535	23930

Generated by SPS 5.0.30P

County: 87
Station: 2517
Description: MIAMI GARDENS DRIVE 200' W OF NW 67TH AVENUE
Start Date: 05/10/2016
Start Time: 0000

	Direction: E					Direction: W					Combined
Time	1st	2nd	3rd	4th	Total	1st	2nd	3rd	4th	Total	Total
0000	64	58	38	41	201	108	88	70	52	318	519
0100	44	28	33	29	134	47	40	25	34	146	280
0200	13	17	17	25	72	22	31	16	15	84	156
0300	10	13	18	12	53	24	14	9	20	67	120
0400	14	24	32	37	107	10	14	24	25	73	180
0500	34	55	107	120	316	32	42	66	88	228	544
0600	167	211	275	281	934	85	159	212	294	750	1684
0700	305	251	281	276	1113	304	287	275	292	1158	2271
0800	275	252	265	304	1096	287	292	321	335	1235	2331
0900	283	263	273	258	1077	273	253	211	227	964	2041
1000	281	275	280	250	1086	206	249	211	219	885	1971
1100	251	247	247	285	1030	240	238	248	275	1001	2031
1200	273	250	273	288	1084	271	277	266	284	1098	2182
1300	299	267	281	285	1132	249	303	258	288	1098	2230
1400	261	302	277	233	1073	288	301	304	314	1207	2280
1500	280	268	297	356	1201	320	339	325	395	1379	2580
1600	338	322	338	331	1329	351	342	397	370	1460	2789
1700	337	341	356	352	1386	408	430	406	398	1642	3028
1800	372	347	360	340	1419	426	402	365	351	1544	2963
1900	300	340	326	234	1200	378	356	354	305	1393	2593
2000	300	283	264	228	1075	301	312	286	264	1163	2238
2100	217	236	240	216	909	311	301	266	291	1169	2078
2200	184	130	136	100	550	218	190	175	162	745	1295
2300	96	92	64	58	310	138	128	125	112	503	813
24-Hour Totals:					19887					21310	41197

Peak Volume Information

	Direction: E		Direction: W		Combined Directions	
	Hour	Volume	Hour	Volume	Hour	Volume
A.M.	845	1123	800	1235	800	2331
P.M.	1745	1431	1715	1660	1715	3081
Daily	1745	1431	1715	1660	1715	3081

Generated by SPS 5.0.30P

County: 87
Station: 2517
Description: MIAMI GARDENS DRIVE 200' W OF NW 67TH AVENUE
Start Date: 05/11/2016
Start Time: 0000

	Direction: E					Direction: W					Combined
Time	1st	2nd	3rd	4th	Total	1st	2nd	3rd	4th	Total	Total
0000	66	53	32	26	177	80	90	61	53	284	461
0100	28	27	29	20	104	44	25	35	20	124	228
0200	18	8	19	14	59	35	27	14	19	95	154
0300	12	13	18	18	61	14	15	19	14	62	123
0400	16	11	24	32	83	16	17	34	27	94	177
0500	27	41	81	94	243	28	55	56	94	233	476
0600	139	204	273	319	935	101	154	276	340	871	1806
0700	338	402	362	304	1406	301	366	387	360	1414	2820
0800	316	322	262	305	1205	347	371	336	330	1384	2589
0900	276	241	221	204	942	264	224	256	206	950	1892
1000	200	220	220	233	873	193	189	226	219	827	1700
1100	232	217	238	227	914	230	244	257	233	964	1878
1200	229	262	262	227	980	282	260	281	270	1093	2073
1300	241	256	226	214	937	292	311	299	312	1214	2151
1400	248	267	230	237	982	319	302	283	276	1180	2162
1500	269	306	273	316	1164	293	323	323	389	1328	2492
1600	389	353	264	346	1352	364	366	393	380	1503	2855
1700	302	355	304	349	1310	399	419	425	454	1697	3007
1800	375	368	343	284	1370	433	464	483	411	1791	3161
1900	251	259	245	213	968	381	369	336	322	1408	2376
2000	222	208	205	153	788	274	287	304	246	1111	1899
2100	138	173	153	126	590	289	281	259	260	1089	1679
2200	109	88	88	91	376	205	186	180	145	716	1092
2300	74	55	61	47	237	150	137	130	86	503	740
24-Hour Totals:					18056					21935	39991

Peak Volume Information

	Direction: E		Direction: W		Combined Directions	
	Hour	Volume	Hour	Volume	Hour	Volume
A.M.	645	1421	730	1465	715	2844
P.M.	1745	1435	1745	1834	1745	3269
Daily	1745	1435	1745	1834	1745	3269

Generated by SPS 5.0.30P

County: 87
Station: 2517
Description: MIAMI GARDENS DRIVE 200' W OF NW 67TH AVENUE
Start Date: 05/12/2016
Start Time: 0000

	Direction: E					Direction: W					Combined
Time	1st	2nd	3rd	4th	Total	1st	2nd	3rd	4th	Total	Total
0000	39	43	31	22	135	86	73	63	48	270	405
0100	25	14	15	13	67	45	43	37	17	142	209
0200	17	8	9	9	43	21	27	19	22	89	132
0300	12	11	10	8	41	22	9	15	20	66	107
0400	10	13	22	32	77	15	22	25	27	89	166
0500	20	38	66	71	195	25	45	61	69	200	395
0600	94	159	192	237	682	100	163	219	266	748	1430
0700	221	246	253	274	994	312	295	283	284	1174	2168
0800	229	206	228	203	866	326	277	328	297	1228	2094
0900	226	230	178	200	834	259	229	218	199	905	1739
1000	201	190	184	186	761	217	234	210	224	885	1646
1100	196	178	156	186	716	192	252	229	260	933	1649
1200	188	154	167	169	678	286	269	273	286	1114	1792
1300	162	170	167	169	668	255	302	272	266	1095	1763
1400	173	216	205	217	811	269	299	305	288	1161	1972
1500	210	201	191	231	833	325	385	331	371	1412	2245
1600	231	260	203	217	911	355	357	356	391	1459	2370
1700	218	215	232	226	891	384	408	419	401	1612	2503
1800	218	246	231	231	926	355	372	390	397	1514	2440
1900	214	188	175	141	718	387	354	337	311	1389	2107
2000	155	122	165	144	586	304	348	309	279	1240	1826
2100	151	153	132	116	552	307	285	274	275	1141	1693
2200	106	105	83	64	358	251	180	169	150	750	1108
2300	74	65	43	37	219	147	109	109	94	459	678
24-Hour Totals:					13562					21075	34637

Peak Volume Information

	Direction: E		Direction: W		Combined Directions	
	Hour	Volume	Hour	Volume	Hour	Volume
A.M.	715	1002	800	1228	715	2190
P.M.	1800	926	1700	1612	1700	2503
Daily	715	1002	1700	1612	1700	2503

Generated by SPS 5.0.30P

County: 87
Station: 2516
Description: MIAMI GARDENS DRIVE 200' W OF NW 57TH AVENUE
Start Date: 05/10/2016
Start Time: 0000

	Direction: E					Direction: W					Combined
Time	1st	2nd	3rd	4th	Total	1st	2nd	3rd	4th	Total	Total
0000	54	55	44	33	186	79	56	37	24	196	382
0100	25	23	14	25	87	29	23	14	26	92	179
0200	9	11	17	20	57	8	13	23	12	56	113
0300	9	11	16	16	52	8	9	14	10	41	93
0400	7	24	16	23	70	6	12	21	15	54	124
0500	37	39	63	89	228	23	29	55	49	156	384
0600	140	175	210	260	785	73	123	157	213	566	1351
0700	342	375	359	330	1406	293	203	182	221	899	2305
0800	357	334	305	273	1269	206	211	237	224	878	2147
0900	278	235	250	275	1038	253	213	206	198	870	1908
1000	263	271	279	229	1042	219	242	196	227	884	1926
1100	247	264	282	249	1042	262	245	247	242	996	2038
1200	275	257	281	315	1128	254	250	231	276	1011	2139
1300	321	286	247	286	1140	255	244	282	268	1049	2189
1400	281	292	355	310	1238	269	268	300	255	1092	2330
1500	293	324	349	327	1293	293	286	288	296	1163	2456
1600	348	317	313	303	1281	274	319	287	306	1186	2467
1700	317	316	327	315	1275	307	375	347	340	1369	2644
1800	339	291	306	308	1244	323	359	308	298	1288	2532
1900	280	284	295	248	1107	282	266	291	259	1098	2205
2000	272	255	241	211	979	235	257	253	253	998	1977
2100	227	251	247	228	953	295	286	249	253	1083	2036
2200	182	161	124	115	582	134	143	126	99	502	1084
2300	105	92	69	51	317	85	93	60	71	309	626
24-Hour Totals:					19799					17836	37635

Peak Volume Information

	Direction: E		Direction: W		Combined Directions	
	Hour	Volume	Hour	Volume	Hour	Volume
A.M.	715	1421	830	927	700	2305
P.M.	1515	1348	1715	1385	1715	2682
Daily	715	1421	1715	1385	1715	2682

Generated by SPS 5.0.30P

County: 87
Station: 2516
Description: MIAMI GARDENS DRIVE 200' W OF NW 57TH AVENUE
Start Date: 05/11/2016
Start Time: 0000

	Direction: E					Direction: W					Combined
Time	1st	2nd	3rd	4th	Total	1st	2nd	3rd	4th	Total	Total
0000	73	59	30	43	205	64	58	30	34	186	391
0100	28	25	19	25	97	26	17	20	22	85	182
0200	12	17	19	25	73	29	19	16	13	77	150
0300	16	13	18	15	62	11	17	15	14	57	119
0400	10	14	19	35	78	8	17	23	19	67	145
0500	35	33	73	92	233	30	30	57	57	174	407
0600	106	155	230	261	752	62	120	216	232	630	1382
0700	368	381	337	364	1450	268	254	297	289	1108	2558
0800	306	341	279	215	1141	208	291	204	241	944	2085
0900	303	261	264	235	1063	236	202	211	193	842	1905
1000	221	251	270	233	975	223	220	210	231	884	1859
1100	250	258	276	256	1040	242	239	260	261	1002	2042
1200	270	299	275	296	1140	242	279	277	257	1055	2195
1300	263	265	277	291	1096	259	248	287	303	1097	2193
1400	312	324	362	311	1309	268	312	261	269	1110	2419
1500	279	338	290	307	1214	265	320	291	285	1161	2375
1600	321	299	254	298	1172	259	296	278	280	1113	2285
1700	264	338	325	328	1255	294	372	374	357	1397	2652
1800	335	333	359	308	1335	358	371	333	324	1386	2721
1900	286	276	276	271	1109	314	264	274	210	1062	2171
2000	258	240	260	223	981	193	255	197	207	852	1833
2100	220	243	244	165	872	209	204	191	159	763	1635
2200	133	120	121	114	488	131	126	92	103	452	940
2300	105	80	67	69	321	72	82	78	63	295	616
24-Hour Totals:					19461					17799	37260

Peak Volume Information

	Direction: E		Direction: W		Combined Directions	
	Hour	Volume	Hour	Volume	Hour	Volume
A.M.	700	1450	700	1108	700	2558
P.M.	1745	1355	1715	1461	1715	2787
Daily	700	1450	1715	1461	1715	2787

Generated by SPS 5.0.30P

County: 87
Station: 2516
Description: MIAMI GARDENS DRIVE 200' W OF NW 57TH AVENUE
Start Date: 05/12/2016
Start Time: 0000

	Direction: E					Direction: W					Combined
Time	1st	2nd	3rd	4th	Total	1st	2nd	3rd	4th	Total	Total
0000	52	59	33	38	182	58	42	49	35	184	366
0100	30	26	25	18	99	31	27	17	10	85	184
0200	16	16	9	10	51	15	14	15	13	57	108
0300	12	15	21	8	56	10	13	12	16	51	107
0400	19	20	16	28	83	13	18	19	14	64	147
0500	39	35	84	86	244	16	26	46	51	139	383
0600	103	178	208	269	758	62	128	145	204	539	1297
0700	360	423	372	392	1547	280	199	175	211	865	2412
0800	324	319	328	240	1211	227	199	233	219	878	2089
0900	235	224	256	261	976	202	201	182	179	764	1740
1000	257	231	214	231	933	201	194	174	215	784	1717
1100	238	267	235	248	988	190	220	250	254	914	1902
1200	264	279	258	273	1074	243	266	239	227	975	2049
1300	256	275	262	249	1042	234	241	290	222	987	2029
1400	240	310	365	316	1231	260	298	279	261	1098	2329
1500	334	332	327	319	1312	267	275	314	287	1143	2455
1600	337	352	321	314	1324	279	307	343	295	1224	2548
1700	320	327	315	275	1237	305	337	355	360	1357	2594
1800	303	351	336	313	1303	307	358	331	306	1302	2605
1900	286	256	294	265	1101	284	297	278	229	1088	2189
2000	294	242	275	249	1060	216	281	204	201	902	1962
2100	235	256	276	213	980	205	174	210	187	776	1756
2200	209	166	137	108	620	172	126	107	94	499	1119
2300	88	98	76	65	327	89	68	83	52	292	619
24-Hour Totals:					19739					16967	36706

Peak Volume Information

	Direction: E		Direction: W		Combined Directions	
	Hour	Volume	Hour	Volume	Hour	Volume
A.M.	700	1547	800	878	700	2412
P.M.	1430	1347	1730	1380	1730	2624
Daily	700	1547	1730	1380	1730	2624

Generated by SPS 5.0.30P

County: 87
Station: 2514
Description: NW 57TH AVENUE 200' N OF MIAMI GARDENS DRIVE
Start Date: 05/10/2016
Start Time: 0000

	Direction: N					Direction: S					Combined
Time	1st	2nd	3rd	4th	Total	1st	2nd	3rd	4th	Total	Total
0000	111	103	88	62	364	80	41	52	39	212	576
0100	46	45	48	40	179	36	38	28	26	128	307
0200	30	29	33	25	117	19	14	21	18	72	189
0300	24	15	25	24	88	24	22	29	42	117	205
0400	26	31	33	37	127	33	57	61	75	226	353
0500	51	69	79	124	323	98	141	200	226	665	988
0600	130	172	272	286	860	316	459	518	594	1887	2747
0700	355	411	376	399	1541	569	526	552	488	2135	3676
0800	363	369	399	368	1499	402	494	504	457	1857	3356
0900	283	254	272	280	1089	446	355	384	371	1556	2645
1000	214	249	247	239	949	359	338	344	355	1396	2345
1100	260	263	291	249	1063	337	296	301	217	1151	2214
1200	326	305	293	326	1250	284	228	234	316	1062	2312
1300	302	311	336	331	1280	287	319	317	313	1236	2516
1400	330	346	417	403	1496	361	334	373	335	1403	2899
1500	419	425	433	438	1715	335	412	357	360	1464	3179
1600	502	497	518	509	2026	344	356	359	293	1352	3378
1700	561	543	542	590	2236	351	353	377	438	1519	3755
1800	576	568	501	530	2175	397	371	385	312	1465	3640
1900	443	482	448	407	1780	340	301	324	294	1259	3039
2000	376	375	356	377	1484	295	269	351	343	1258	2742
2100	371	340	307	295	1313	337	372	332	324	1365	2678
2200	256	252	214	205	927	201	177	159	137	674	1601
2300	158	157	132	110	557	135	90	117	89	431	988
24-Hour Totals:					26438					25890	52328

Peak Volume Information

	Direction: N		Direction: S		Combined Directions	
	Hour	Volume	Hour	Volume	Hour	Volume
A.M.	715	1549	645	2241	700	3676
P.M.	1730	2276	1745	1591	1730	3859
Daily	1730	2276	645	2241	1730	3859

Generated by SPS 5.0.30P

County: 87
Station: 2514
Description: NW 57TH AVENUE 200' N OF MIAMI GARDENS DRIVE
Start Date: 05/11/2016
Start Time: 0000

	Direction: N					Direction: S					Combined
Time	1st	2nd	3rd	4th	Total	1st	2nd	3rd	4th	Total	Total
0000	120	105	79	62	366	72	66	47	30	215	581
0100	52	45	39	35	171	38	37	18	20	113	284
0200	22	37	25	25	109	18	12	20	18	68	177
0300	23	19	28	23	93	27	35	45	44	151	244
0400	28	26	28	55	137	30	46	63	82	221	358
0500	39	75	91	100	305	95	147	196	233	671	976
0600	144	171	257	339	911	331	480	500	566	1877	2788
0700	333	406	429	486	1654	540	529	591	530	2190	3844
0800	350	400	377	381	1508	491	444	488	473	1896	3404
0900	276	247	274	254	1051	428	360	437	358	1583	2634
1000	256	245	246	250	997	340	360	323	309	1332	2329
1100	235	281	276	288	1080	278	361	351	301	1291	2371
1200	324	300	310	301	1235	305	319	327	302	1253	2488
1300	332	360	312	365	1369	271	300	385	400	1356	2725
1400	416	388	419	454	1677	392	401	376	335	1504	3181
1500	437	383	507	428	1755	355	358	337	283	1333	3088
1600	504	511	529	480	2024	329	343	319	326	1317	3341
1700	552	553	545	578	2228	382	418	380	406	1586	3814
1800	582	592	555	541	2270	432	387	410	371	1600	3870
1900	478	451	435	435	1799	345	326	322	266	1259	3058
2000	404	369	413	328	1514	274	275	269	218	1036	2550
2100	317	360	360	266	1303	243	232	208	180	863	2166
2200	292	224	219	211	946	163	169	159	152	643	1589
2300	193	150	134	138	615	141	139	120	103	503	1118
24-Hour Totals:					27117					25861	52978

Peak Volume Information

	Direction: N		Direction: S		Combined Directions	
	Hour	Volume	Hour	Volume	Hour	Volume
A.M.	715	1671	645	2226	700	3844
P.M.	1745	2307	1715	1636	1745	3942
Daily	1745	2307	645	2226	1745	3942

Generated by SPS 5.0.30P

County: 87
Station: 2514
Description: NW 57TH AVENUE 200' N OF MIAMI GARDENS DRIVE
Start Date: 05/12/2016
Start Time: 0000

	Direction: N					Direction: S					Combined
Time	1st	2nd	3rd	4th	Total	1st	2nd	3rd	4th	Total	Total
0000	104	96	65	60	325	74	49	43	40	206	531
0100	50	37	38	38	163	31	29	26	21	107	270
0200	27	30	28	22	107	25	26	19	26	96	203
0300	27	26	33	24	110	27	35	39	36	137	247
0400	31	24	43	56	154	37	48	62	81	228	382
0500	45	76	101	112	334	89	130	199	254	672	1006
0600	119	179	271	272	841	342	473	532	571	1918	2759
0700	338	392	428	399	1557	516	533	608	543	2200	3757
0800	388	393	368	350	1499	473	445	478	451	1847	3346
0900	258	265	275	234	1032	404	388	380	374	1546	2578
1000	247	270	265	252	1034	332	294	323	284	1233	2267
1100	252	283	267	289	1091	268	259	316	252	1095	2186
1200	287	329	292	320	1228	279	291	249	231	1050	2278
1300	291	332	339	336	1298	288	300	310	337	1235	2533
1400	333	381	410	383	1507	352	314	305	272	1243	2750
1500	460	456	492	456	1864	324	386	318	281	1309	3173
1600	510	512	473	496	1991	307	338	383	385	1413	3404
1700	567	568	555	525	2215	396	406	398	424	1624	3839
1800	527	582	529	475	2113	402	403	391	355	1551	3664
1900	474	471	446	408	1799	317	339	301	266	1223	3022
2000	408	409	399	359	1575	291	301	259	256	1107	2682
2100	335	348	344	353	1380	235	243	261	233	972	2352
2200	315	232	245	224	1016	198	161	158	154	671	1687
2300	168	165	160	106	599	145	102	124	84	455	1054
24-Hour Totals:					26832					25138	51970

Peak Volume Information

	Direction: N		Direction: S		Combined Directions	
	Hour	Volume	Hour	Volume	Hour	Volume
A.M.	730	1608	645	2228	715	3764
P.M.	1700	2215	1715	1630	1700	3839
Daily	1700	2215	645	2228	1700	3839

Generated by SPS 5.0.30P

County: 87
Station: 1233
Description: MIAMI GARDENS DRIVE 200' E OF NW 57TH AVENUE
Start Date: 05/10/2016
Start Time: 0000

	Direction: E					Direction: W					Combined
Time	1st	2nd	3rd	4th	Total	1st	2nd	3rd	4th	Total	Total
0000	52	47	56	34	189	71	38	21	29	159	348
0100	27	36	20	14	97	26	19	22	31	98	195
0200	17	9	17	12	55	11	15	18	14	58	113
0300	10	13	9	21	53	16	8	12	9	45	98
0400	16	17	13	18	64	10	18	23	18	69	133
0500	29	25	43	63	160	27	57	73	94	251	411
0600	89	124	137	211	561	106	158	168	245	677	1238
0700	283	309	377	335	1304	270	213	191	225	899	2203
0800	298	247	268	242	1055	230	208	224	260	922	1977
0900	210	182	200	198	790	255	234	214	199	902	1692
1000	180	225	237	196	838	190	207	178	199	774	1612
1100	203	211	198	201	813	206	218	196	207	827	1640
1200	238	186	212	235	871	208	221	209	210	848	1719
1300	264	249	199	218	930	213	217	217	227	874	1804
1400	232	228	246	267	973	226	231	224	217	898	1871
1500	224	257	279	290	1050	232	264	280	254	1030	2080
1600	324	319	275	282	1200	279	293	271	303	1146	2346
1700	316	309	309	329	1263	346	327	340	334	1347	2610
1800	304	281	276	257	1118	338	313	267	257	1175	2293
1900	273	259	249	248	1029	266	235	241	217	959	1988
2000	234	202	224	207	867	235	229	195	176	835	1702
2100	173	207	203	179	762	188	174	162	177	701	1463
2200	171	126	117	99	513	120	115	116	92	443	956
2300	121	78	68	58	325	64	79	60	56	259	584
24-Hour Totals:					16880					16196	33076

Peak Volume Information

	Direction: E		Direction: W		Combined Directions	
	Hour	Volume	Hour	Volume	Hour	Volume
A.M.	715	1319	830	973	700	2203
P.M.	1700	1263	1700	1347	1700	2610
Daily	715	1319	1700	1347	1700	2610

Truck Percentage 1.27 2.14 1.70

Classification Summary Database

Dir	1	2	3	4	5	6	7	8	9	10	11	12	13	14	15	TotTrk	TotVol
E	31	16149	485	74	111	10	3	10	7	0	0	0	0	0	0	215	16880
W	16	15013	820	134	148	27	0	27	11	0	0	0	0	0	0	347	16196

Generated by SPS 5.0.30P

County: 87
Station: 1233
Description: MIAMI GARDENS DRIVE 200' E OF NW 57TH AVENUE
Start Date: 05/11/2016
Start Time: 0000

	Direction: E					Direction: W					Combined
Time	1st	2nd	3rd	4th	Total	1st	2nd	3rd	4th	Total	Total
0000	60	43	46	39	188	62	38	30	30	160	348
0100	30	21	14	18	83	18	20	22	18	78	161
0200	15	21	17	12	65	18	22	12	10	62	127
0300	12	17	12	10	51	8	5	13	14	40	91
0400	15	10	19	28	72	10	19	29	30	88	160
0500	19	26	37	59	141	35	55	78	91	259	400
0600	95	117	160	221	593	107	141	223	225	696	1289
0700	286	304	360	309	1259	251	197	141	262	851	2110
0800	281	235	277	259	1052	210	246	238	267	961	2013
0900	248	250	228	215	941	219	182	210	203	814	1755
1000	159	209	201	186	755	178	224	189	212	803	1558
1100	176	197	182	243	798	231	213	194	202	840	1638
1200	213	209	255	243	920	239	210	218	214	881	1801
1300	223	232	200	241	896	206	227	206	226	865	1761
1400	221	222	276	249	968	236	226	224	231	917	1885
1500	252	246	278	272	1048	224	238	236	258	956	2004
1600	326	281	283	303	1193	294	259	294	267	1114	2307
1700	301	338	230	351	1220	297	327	340	333	1297	2517
1800	314	294	309	317	1234	336	333	308	293	1270	2504
1900	281	284	246	235	1046	312	238	247	200	997	2043
2000	209	215	232	185	841	200	232	177	181	790	1631
2100	197	191	200	175	763	198	164	176	158	696	1459
2200	124	118	100	102	444	138	122	103	89	452	896
2300	95	78	63	74	310	72	58	64	51	245	555
24-Hour Totals:					16881					16132	33013

Peak Volume Information

	Direction: E		Direction: W		Combined Directions	
	Hour	Volume	Hour	Volume	Hour	Volume
A.M.	700	1259	815	970	700	2110
P.M.	1745	1268	1730	1342	1745	2578
Daily	1745	1268	1730	1342	1745	2578

Truck Percentage 1.04 1.88 1.45

Classification Summary Database

Dir	1	2	3	4	5	6	7	8	9	10	11	12	13	14	15	TotTrk	TotVol
E	31	16328	347	61	86	10	1	13	4	0	0	0	0	0	0	175	16881
W	16	15097	715	130	122	16	0	25	11	0	0	0	0	0	0	304	16132

Generated by SPS 5.0.30P

County: 87
Station: 1233
Description: MIAMI GARDENS DRIVE 200' E OF NW 57TH AVENUE
Start Date: 05/12/2016
Start Time: 0000

	Direction: E					Direction: W					Combined
Time	1st	2nd	3rd	4th	Total	1st	2nd	3rd	4th	Total	Total
0000	56	58	29	40	183	54	32	35	25	146	329
0100	28	33	23	14	98	23	19	16	24	82	180
0200	14	11	10	11	46	16	16	8	12	52	98
0300	13	9	22	10	54	7	16	11	13	47	101
0400	21	18	16	27	82	16	17	25	26	84	166
0500	29	22	40	59	150	28	56	74	91	249	399
0600	84	129	118	223	554	102	157	179	261	699	1253
0700	295	337	375	384	1391	264	183	193	211	851	2242
0800	293	261	282	251	1087	209	198	244	243	894	1981
0900	191	197	185	199	772	214	195	180	176	765	1537
1000	196	183	182	192	753	177	213	173	202	765	1518
1100	194	232	193	194	813	184	192	229	202	807	1620
1200	202	200	235	229	866	212	206	216	182	816	1682
1300	222	218	201	244	885	231	192	215	209	847	1732
1400	180	236	275	288	979	217	233	224	233	907	1886
1500	270	274	302	314	1160	228	272	270	259	1029	2189
1600	321	321	305	299	1246	265	285	247	274	1071	2317
1700	302	317	302	298	1219	309	366	326	351	1352	2571
1800	305	323	286	307	1221	313	309	314	314	1250	2471
1900	268	243	215	272	998	264	272	248	198	982	1980
2000	218	202	222	185	827	213	230	177	164	784	1611
2100	208	225	213	206	852	199	176	161	156	692	1544
2200	163	117	143	110	533	154	101	107	74	436	969
2300	95	94	75	73	337	79	67	68	58	272	609
24-Hour Totals:					17106					15879	32985

Peak Volume Information

	Direction: E		Direction: W		Combined Directions	
	Hour	Volume	Hour	Volume	Hour	Volume
A.M.	700	1391	645	901	700	2242
P.M.	1545	1261	1715	1356	1715	2578
Daily	700	1391	1715	1356	1715	2578

Truck Percentage 1.32 1.95 1.62

Classification Summary Database

Dir	1	2	3	4	5	6	7	8	9	10	11	12	13	14	15	TotTrk	TotVol
E	23	16381	476	89	105	4	4	22	0	2	0	0	0	0	0	226	17106
W	19	14715	835	117	138	14	1	28	10	2	0	0	0	0	0	310	15879

Generated by SPS 5.0.30P

County: 99
Station: 0072
Description: NW 87TH AVENUE 800' N OF MIAMI GARDENS DRIVE
Start Date: 05/03/2016
Start Time: 0000

	Direction: N					Direction: S					Combined
Time	1st	2nd	3rd	4th	Total	1st	2nd	3rd	4th	Total	Total
0000	29	29	15	20	93	19	19	10	7	55	148
0100	10	10	10	12	42	5	10	3	7	25	67
0200	10	6	5	4	25	8	6	5	3	22	47
0300	6	3	4	3	16	7	9	6	6	28	44
0400	5	2	2	4	13	6	9	11	24	50	63
0500	10	20	17	31	78	24	43	67	64	198	276
0600	18	29	41	89	177	94	139	174	197	604	781
0700	83	116	161	140	500	198	188	201	209	796	1296
0800	138	145	167	119	569	204	207	182	196	789	1358
0900	99	100	90	110	399	167	169	165	139	640	1039
1000	111	113	107	123	454	132	133	142	146	553	1007
1100	130	132	112	99	473	127	131	121	139	518	991
1200	124	119	116	120	479	123	120	125	135	503	982
1300	137	104	130	136	507	117	139	134	147	537	1044
1400	147	151	180	183	661	163	159	166	152	640	1301
1500	174	181	203	212	770	147	157	130	165	599	1369
1600	197	213	218	254	882	171	127	135	149	582	1464
1700	232	267	275	259	1033	143	179	160	170	652	1685
1800	269	263	290	217	1039	149	157	149	140	595	1634
1900	206	215	188	180	789	135	170	135	151	591	1380
2000	161	166	173	162	662	130	124	101	100	455	1117
2100	153	145	140	104	542	106	96	90	80	372	914
2200	88	99	76	63	326	68	54	62	37	221	547
2300	49	67	50	51	217	58	48	37	21	164	381
24-Hour Totals:					10746					10189	20935

Peak Volume Information

	Direction: N		Direction: S		Combined Directions	
	Hour	Volume	Hour	Volume	Hour	Volume
A.M.	745	590	730	821	730	1405
P.M.	1745	1081	1715	658	1715	1728
Daily	1745	1081	730	821	1715	1728

Generated by SPS 5.0.30P

County: 99
Station: 0072
Description: NW 87TH AVENUE 800' N OF MIAMI GARDENS DRIVE
Start Date: 05/04/2016
Start Time: 0000

	Direction: N					Direction: S					Combined
Time	1st	2nd	3rd	4th	Total	1st	2nd	3rd	4th	Total	Total
0000	37	31	22	18	108	27	18	11	7	63	171
0100	10	17	8	15	50	10	7	5	8	30	80
0200	11	6	6	6	29	9	2	7	2	20	49
0300	2	2	4	5	13	9	5	6	9	29	42
0400	4	7	6	4	21	7	9	18	21	55	76
0500	6	16	10	32	64	29	41	46	45	161	225
0600	22	26	56	78	182	89	117	161	199	566	748
0700	101	135	167	139	542	247	254	200	237	938	1480
0800	142	194	151	138	625	231	239	211	186	867	1492
0900	115	79	101	91	386	179	147	149	132	607	993
1000	79	96	101	108	384	138	127	136	143	544	928
1100	104	118	135	114	471	109	132	124	122	487	958
1200	134	115	119	112	480	141	125	149	114	529	1009
1300	113	123	99	135	470	118	117	118	132	485	955
1400	145	120	168	175	608	133	134	132	85	484	1092
1500	143	130	155	211	639	96	84	129	151	460	1099
1600	198	209	227	236	870	141	140	138	140	559	1429
1700	279	300	272	276	1127	157	131	149	142	579	1706
1800	295	268	298	255	1116	149	169	155	130	603	1719
1900	206	196	183	170	755	129	128	108	109	474	1229
2000	143	150	151	122	566	118	107	97	80	402	968
2100	121	136	122	104	483	79	64	63	49	255	738
2200	78	82	44	46	250	63	67	57	30	217	467
2300	50	51	22	40	163	29	30	10	35	104	267
24-Hour Totals:					10402					9518	19920

Peak Volume Information

	Direction: N		Direction: S		Combined Directions	
	Hour	Volume	Hour	Volume	Hour	Volume
A.M.	730	642	700	938	730	1549
P.M.	1715	1143	1745	615	1745	1752
Daily	1715	1143	700	938	1745	1752

Generated by SPS 5.0.30P

County: 99
Station: 0072
Description: NW 87TH AVENUE 800' N OF MIAMI GARDENS DRIVE
Start Date: 05/05/2016
Start Time: 0000

	Direction: N					Direction: S					Combined
Time	1st	2nd	3rd	4th	Total	1st	2nd	3rd	4th	Total	Total
0000	30	33	24	15	102	15	15	14	6	50	152
0100	17	15	9	8	49	9	4	12	4	29	78
0200	8	5	6	6	25	2	6	5	8	21	46
0300	6	3	3	4	16	7	8	2	4	21	37
0400	2	4	7	7	20	6	13	20	15	54	74
0500	6	14	20	20	60	30	37	47	57	171	231
0600	25	28	48	78	179	70	120	166	153	509	688
0700	92	122	161	148	523	201	172	158	198	729	1252
0800	146	142	166	115	569	150	185	179	155	669	1238
0900	111	108	101	103	423	158	146	159	161	624	1047
1000	104	101	102	91	398	146	123	150	138	557	955
1100	114	99	111	114	438	143	136	122	120	521	959
1200	121	115	115	116	467	113	132	133	121	499	966
1300	131	128	130	152	541	145	140	121	122	528	1069
1400	144	125	183	185	637	181	158	137	142	618	1255
1500	172	198	227	248	845	136	136	159	174	605	1450
1600	232	228	252	250	962	156	170	181	175	682	1644
1700	256	299	275	244	1074	183	159	141	146	629	1703
1800	281	265	248	247	1041	155	171	173	160	659	1700
1900	256	232	218	217	923	173	134	150	151	608	1531
2000	198	172	158	134	662	144	137	111	109	501	1163
2100	150	156	159	163	628	120	106	113	99	438	1066
2200	112	111	103	60	386	79	81	66	44	270	656
2300	52	78	79	44	253	70	42	35	33	180	433
24-Hour Totals:					11221					10172	21393

Peak Volume Information

	Direction: N		Direction: S		Combined Directions	
	Hour	Volume	Hour	Volume	Hour	Volume
A.M.	745	602	700	729	745	1314
P.M.	1715	1099	1615	709	1630	1755
Daily	1715	1099	700	729	1630	1755

Generated by SPS 5.0.30P

County: 99
Station: 0071
Description: NW 87TH AVENUE 200' S OF MIAMI GARDENS DRIVE
Start Date: 05/03/2016
Start Time: 0000

	Direction: N					Direction: S					Combined
Time	1st	2nd	3rd	4th	Total	1st	2nd	3rd	4th	Total	Total
0000	16	9	21	7	53	29	26	15	10	80	133
0100	7	7	2	2	18	11	14	3	9	37	55
0200	4	4	0	3	11	8	8	2	3	21	32
0300	5	6	5	5	21	4	7	4	4	19	40
0400	5	7	9	12	33	4	5	8	3	20	53
0500	15	23	24	36	98	5	16	19	29	69	167
0600	40	81	119	177	417	40	61	116	164	381	798
0700	175	217	216	195	803	184	223	177	221	805	1608
0800	195	213	208	157	773	240	254	191	174	859	1632
0900	106	112	108	112	438	143	131	98	130	502	940
1000	110	109	111	112	442	105	97	93	104	399	841
1100	92	87	91	87	357	105	113	112	117	447	804
1200	121	108	106	102	437	94	114	110	117	435	872
1300	93	109	109	96	407	106	132	120	154	512	919
1400	123	90	183	149	545	126	186	175	212	699	1244
1500	159	154	187	170	670	189	217	195	209	810	1480
1600	141	157	161	168	627	189	199	197	215	800	1427
1700	181	166	183	168	698	209	274	254	232	969	1667
1800	180	152	171	149	652	254	229	215	193	891	1543
1900	135	137	132	134	538	197	166	188	156	707	1245
2000	100	101	98	105	404	148	140	134	125	547	951
2100	83	74	86	56	299	132	116	118	98	464	763
2200	60	50	45	33	188	90	63	78	48	279	467
2300	42	40	17	26	125	44	52	48	45	189	314
24-Hour Totals:					9054					10941	19995

Peak Volume Information

	Direction: N		Direction: S		Combined Directions	
	Hour	Volume	Hour	Volume	Hour	Volume
A.M.	715	823	745	906	745	1717
P.M.	1645	698	1715	1014	1715	1711
Daily	715	823	1715	1014	745	1717

Generated by SPS 5.0.30P

County: 99
Station: 0071
Description: NW 87TH AVENUE 200' S OF MIAMI GARDENS DRIVE
Start Date: 05/04/2016
Start Time: 0000

	Direction: N					Direction: S					Combined
Time	1st	2nd	3rd	4th	Total	1st	2nd	3rd	4th	Total	Total
0000	16	17	13	12	58	20	30	22	12	84	142
0100	5	5	7	6	23	14	14	7	13	48	71
0200	4	3	3	2	12	10	10	2	2	24	36
0300	0	0	2	7	9	5	2	7	6	20	29
0400	5	8	7	11	31	4	2	7	6	19	50
0500	13	27	28	29	97	7	14	16	27	64	161
0600	52	68	106	164	390	44	62	95	154	355	745
0700	211	318	322	296	1147	181	225	177	212	795	1942
0800	287	330	279	215	1111	252	263	187	184	886	1997
0900	127	103	111	90	431	155	132	122	118	527	958
1000	86	96	118	103	403	106	99	100	99	404	807
1100	90	100	118	94	402	92	103	94	103	392	794
1200	111	116	112	87	426	125	117	118	126	486	912
1300	71	96	93	113	373	123	140	133	133	529	902
1400	137	102	173	176	588	154	163	159	134	610	1198
1500	169	149	179	219	716	162	155	166	165	648	1364
1600	199	198	148	194	739	194	193	198	190	775	1514
1700	190	218	219	183	810	217	212	244	239	912	1722
1800	189	192	190	191	762	217	226	214	177	834	1596
1900	118	123	110	96	447	174	144	139	128	585	1032
2000	78	94	84	60	316	121	118	144	110	493	809
2100	67	58	54	60	239	106	94	92	99	391	630
2200	58	48	44	32	182	89	92	57	44	282	464
2300	20	17	16	23	76	44	38	26	34	142	218
24-Hour Totals:					9788					10305	20093

Peak Volume Information

	Direction: N		Direction: S		Combined Directions	
	Hour	Volume	Hour	Volume	Hour	Volume
A.M.	730	1235	745	914	730	2139
P.M.	1645	821	1730	926	1700	1722
Daily	730	1235	1730	926	730	2139

Generated by SPS 5.0.30P

County: 99
Station: 0071
Description: NW 87TH AVENUE 200' S OF MIAMI GARDENS DRIVE
Start Date: 05/05/2016
Start Time: 0000

	Direction: N					Direction: S					Combined
Time	1st	2nd	3rd	4th	Total	1st	2nd	3rd	4th	Total	Total
0000	17	11	13	8	49	34	22	19	15	90	139
0100	8	8	10	0	26	8	18	14	10	50	76
0200	2	0	2	6	10	8	3	5	7	23	33
0300	1	2	1	5	9	5	0	7	4	16	25
0400	6	5	9	13	33	3	3	7	5	18	51
0500	16	23	19	32	90	7	10	9	29	55	145
0600	41	63	102	136	342	34	57	102	146	339	681
0700	162	183	210	163	718	186	205	171	211	773	1491
0800	121	79	75	73	348	243	285	165	174	867	1215
0900	83	67	82	67	299	154	130	99	106	489	788
1000	77	74	75	65	291	111	104	85	114	414	705
1100	53	69	74	59	255	108	108	98	112	426	681
1200	76	55	91	90	312	100	110	107	117	434	746
1300	115	114	103	114	446	125	127	139	119	510	956
1400	133	104	198	154	589	164	173	152	180	669	1258
1500	145	171	202	185	703	193	207	214	223	837	1540
1600	143	140	167	138	588	193	212	238	224	867	1455
1700	171	187	166	171	695	243	276	227	234	980	1675
1800	172	167	162	146	647	233	212	213	239	897	1544
1900	145	144	140	141	570	219	204	197	207	827	1397
2000	102	122	109	73	406	176	170	138	146	630	1036
2100	99	94	88	78	359	130	141	144	108	523	882
2200	63	52	41	41	197	109	82	69	99	359	556
2300	56	52	31	30	169	64	80	45	49	238	407
24-Hour Totals:					8151					11331	19482

Peak Volume Information

	Direction: N		Direction: S		Combined Directions	
	Hour	Volume	Hour	Volume	Hour	Volume
A.M.	700	718	730	910	715	1507
P.M.	1500	703	1630	981	1700	1675
Daily	700	718	1630	981	1700	1675

Generated by SPS 5.0.30P

County: 99
Station: 0073
Description: MIAMI GARDENS DRIVE 800' E OF NW 87TH AVENUE
Start Date: 05/03/2016
Start Time: 0000

	Direction: E					Direction: W					Combined
Time	1st	2nd	3rd	4th	Total	1st	2nd	3rd	4th	Total	Total
0000	57	50	57	26	190	34	40	20	25	119	309
0100	31	16	22	21	90	23	23	15	12	73	163
0200	18	15	11	9	53	17	8	13	9	47	100
0300	18	13	6	11	48	10	16	14	15	55	103
0400	9	7	15	16	47	20	28	35	42	125	172
0500	20	26	21	47	114	36	76	94	124	330	444
0600	53	76	92	152	373	147	258	362	445	1212	1585
0700	168	171	168	157	664	450	404	330	367	1551	2215
0800	163	161	158	158	640	425	374	386	351	1536	2176
0900	152	178	162	154	646	265	230	211	237	943	1589
1000	140	153	154	157	604	177	183	186	169	715	1319
1100	143	166	168	174	651	184	166	182	158	690	1341
1200	193	179	180	181	733	167	172	177	174	690	1423
1300	180	170	191	183	724	191	189	203	217	800	1524
1400	208	227	257	253	945	200	235	194	240	869	1814
1500	267	259	268	267	1061	238	229	229	224	920	1981
1600	301	302	309	361	1273	210	233	199	229	871	2144
1700	379	372	393	421	1565	248	224	233	238	943	2508
1800	388	405	404	305	1502	226	210	227	205	868	2370
1900	310	293	307	239	1149	213	198	200	223	834	1983
2000	271	262	208	203	944	186	174	153	208	721	1665
2100	210	174	185	180	749	229	159	137	96	621	1370
2200	162	163	124	116	565	119	88	80	57	344	909
2300	104	154	91	93	442	74	74	49	48	245	687
24-Hour Totals:					15772					16122	31894

Peak Volume Information

	Direction: E		Direction: W		Combined Directions	
	Hour	Volume	Hour	Volume	Hour	Volume
A.M.	700	664	645	1629	645	2288
P.M.	1745	1618	1700	943	1745	2519
Daily	1745	1618	630	1661	1745	2519

Generated by SPS 5.0.30P

County: 99
Station: 0073
Description: MIAMI GARDENS DRIVE 800' E OF NW 87TH AVENUE
Start Date: 05/04/2016
Start Time: 0000

	Direction: E					Direction: W					Combined
Time	1st	2nd	3rd	4th	Total	1st	2nd	3rd	4th	Total	Total
0000	54	51	56	28	189	34	23	26	27	110	299
0100	32	24	17	27	100	15	16	18	19	68	168
0200	22	6	18	9	55	20	15	9	9	53	108
0300	5	8	8	8	29	10	6	13	17	46	75
0400	9	8	19	18	54	12	19	38	40	109	163
0500	27	23	35	32	117	32	60	93	125	310	427
0600	54	74	104	124	356	139	264	407	535	1345	1701
0700	154	172	166	154	646	528	569	535	587	2219	2865
0800	161	199	158	162	680	542	398	423	374	1737	2417
0900	148	145	156	141	590	253	258	191	205	907	1497
1000	144	134	176	140	594	203	208	195	170	776	1370
1100	130	169	166	148	613	158	173	170	185	686	1299
1200	188	198	204	165	755	197	196	168	153	714	1469
1300	162	175	201	211	749	190	185	170	180	725	1474
1400	204	184	219	197	804	220	156	204	174	754	1558
1500	225	211	295	246	977	179	215	222	193	809	1786
1600	287	345	301	347	1280	204	238	236	178	856	2136
1700	360	427	435	404	1626	227	242	262	199	930	2556
1800	386	433	450	332	1601	203	260	211	238	912	2513
1900	304	264	289	244	1101	192	189	189	171	741	1842
2000	216	249	184	192	841	149	154	185	178	666	1507
2100	156	139	150	151	596	128	104	140	103	475	1071
2200	121	139	147	101	508	119	105	63	51	338	846
2300	64	90	59	71	284	56	43	23	37	159	443
24-Hour Totals:					15145					16445	31590

Peak Volume Information

	Direction: E		Direction: W		Combined Directions	
	Hour	Volume	Hour	Volume	Hour	Volume
A.M.	730	680	715	2233	715	2886
P.M.	1745	1673	1700	930	1730	2582
Daily	1745	1673	715	2233	715	2886

Generated by SPS 5.0.30P

County: 99
Station: 0073
Description: MIAMI GARDENS DRIVE 800' E OF NW 87TH AVENUE
Start Date: 05/05/2016
Start Time: 0000

	Direction: E					Direction: W					Combined
Time	1st	2nd	3rd	4th	Total	1st	2nd	3rd	4th	Total	Total
0000	56	47	49	25	177	51	25	32	17	125	302
0100	27	34	26	13	100	18	19	16	14	67	167
0200	9	20	12	13	54	16	5	12	10	43	97
0300	15	9	12	10	46	9	11	16	15	51	97
0400	15	8	14	16	53	22	18	43	42	125	178
0500	21	23	28	45	117	33	65	106	133	337	454
0600	75	66	97	123	361	147	229	349	426	1151	1512
0700	165	157	144	166	632	431	400	427	403	1661	2293
0800	161	165	150	150	626	344	369	361	312	1386	2012
0900	155	157	150	163	625	271	256	222	219	968	1593
1000	153	146	145	148	592	185	207	193	182	767	1359
1100	152	142	155	161	610	184	167	201	157	709	1319
1200	175	158	160	162	655	223	177	200	160	760	1415
1300	176	195	193	182	746	171	175	216	199	761	1507
1400	217	197	257	256	927	218	253	231	225	927	1854
1500	261	261	249	290	1061	234	259	266	261	1020	2081
1600	306	315	327	359	1307	263	274	256	248	1041	2348
1700	402	391	405	392	1590	236	225	255	233	949	2539
1800	385	338	331	364	1418	252	248	257	237	994	2412
1900	344	328	316	296	1284	221	217	221	268	927	2211
2000	288	255	258	197	998	210	198	170	186	764	1762
2100	205	192	212	194	803	155	140	155	139	589	1392
2200	183	190	145	116	634	139	126	95	89	449	1083
2300	111	112	121	78	422	92	76	75	77	320	742
24-Hour Totals:					15838					16891	32729

Peak Volume Information

	Direction: E		Direction: W		Combined Directions	
	Hour	Volume	Hour	Volume	Hour	Volume
A.M.	745	642	645	1684	700	2293
P.M.	1700	1590	1530	1064	1700	2539
Daily	1700	1590	645	1684	1700	2539

Generated by SPS 5.0.30P

County: 99
Station: 0074
Description: MIAMI GARDENS DRIVE 800' W OF NW 82TH AVENUE
Start Date: 05/03/2016
Start Time: 0000

	Direction: E					Direction: W					Combined
Time	1st	2nd	3rd	4th	Total	1st	2nd	3rd	4th	Total	Total
0000	60	50	58	28	196	34	37	24	27	122	318
0100	31	19	21	22	93	23	23	16	11	73	166
0200	21	13	11	11	56	15	10	12	8	45	101
0300	17	13	5	9	44	10	14	14	15	53	97
0400	8	9	14	16	47	15	30	33	37	115	162
0500	16	25	27	49	117	32	68	105	129	334	451
0600	54	85	93	163	395	150	249	367	500	1266	1661
0700	173	200	202	185	760	467	477	425	417	1786	2546
0800	180	173	181	178	712	427	411	461	410	1709	2421
0900	181	205	184	163	733	312	254	250	232	1048	1781
1000	158	173	175	165	671	214	215	187	227	843	1514
1100	168	180	179	202	729	197	209	208	179	793	1522
1200	219	203	200	208	830	185	220	217	206	828	1658
1300	215	199	211	222	847	224	240	226	272	962	1809
1400	248	266	295	286	1095	244	277	271	317	1109	2204
1500	301	320	326	330	1277	265	291	274	260	1090	2367
1600	329	331	337	389	1386	261	277	246	293	1077	2463
1700	405	427	433	456	1721	293	266	298	323	1180	2901
1800	438	472	465	340	1715	326	282	304	243	1155	2870
1900	352	328	340	268	1288	262	265	241	257	1025	2313
2000	289	255	224	229	997	220	202	166	188	776	1773
2100	258	207	205	190	860	163	149	153	106	571	1431
2200	184	169	129	116	598	130	95	84	65	374	972
2300	115	152	110	90	467	93	76	61	50	280	747
24-Hour Totals:					17634					18614	36248

Peak Volume Information

	Direction: E		Direction: W		Combined Directions	
	Hour	Volume	Hour	Volume	Hour	Volume
A.M.	715	767	645	1869	645	2607
P.M.	1745	1831	1745	1235	1745	3066
Daily	1745	1831	645	1869	1745	3066

Generated by SPS 5.0.30P

County: 99
Station: 0074
Description: MIAMI GARDENS DRIVE 800' W OF NW 82TH AVENUE
Start Date: 05/04/2016
Start Time: 0000

	Direction: E					Direction: W					Combined
Time	1st	2nd	3rd	4th	Total	1st	2nd	3rd	4th	Total	Total
0000	61	63	57	29	210	47	25	24	31	127	337
0100	36	29	17	29	111	15	14	23	19	71	182
0200	22	5	17	10	54	17	16	10	8	51	105
0300	5	8	8	9	30	11	7	9	21	48	78
0400	9	7	17	20	53	10	14	40	36	100	153
0500	26	17	33	36	112	29	51	94	123	297	409
0600	57	73	102	137	369	139	254	367	472	1232	1601
0700	158	176	208	186	728	460	527	484	488	1959	2687
0800	182	190	160	169	701	430	373	400	371	1574	2275
0900	182	163	179	155	679	259	266	216	258	999	1678
1000	162	156	186	161	665	233	220	241	189	883	1548
1100	145	186	178	172	681	188	201	186	209	784	1465
1200	199	231	225	172	827	240	232	213	180	865	1692
1300	182	191	222	230	825	200	206	194	199	799	1624
1400	254	193	248	227	922	257	177	252	209	895	1817
1500	224	220	272	276	992	195	226	239	225	885	1877
1600	311	364	318	351	1344	249	233	219	208	909	2253
1700	385	404	447	394	1630	240	288	234	239	1001	2631
1800	407	425	415	358	1605	249	291	262	234	1036	2641
1900	328	284	300	258	1170	241	242	228	186	897	2067
2000	242	271	209	220	942	163	161	162	116	602	1544
2100	180	152	165	165	662	149	118	139	99	505	1167
2200	135	143	150	100	528	125	101	73	56	355	883
2300	79	89	66	72	306	52	45	28	42	167	473
24-Hour Totals:					16146					17041	33187

Peak Volume Information

	Direction: E		Direction: W		Combined Directions	
	Hour	Volume	Hour	Volume	Hour	Volume
A.M.	730	766	700	1959	700	2687
P.M.	1730	1673	1745	1041	1730	2686
Daily	1730	1673	700	1959	700	2687

Generated by SPS 5.0.30P

County: 99
Station: 0074
Description: MIAMI GARDENS DRIVE 800' W OF NW 82TH AVENUE
Start Date: 05/05/2016
Start Time: 0000

	Direction: E					Direction: W					Combined
Time	1st	2nd	3rd	4th	Total	1st	2nd	3rd	4th	Total	Total
0000	58	46	50	27	181	49	23	28	17	117	298
0100	29	32	26	14	101	22	18	19	17	76	177
0200	11	19	13	15	58	15	6	13	9	43	101
0300	14	10	13	10	47	8	10	16	19	53	100
0400	13	10	15	12	50	24	19	42	39	124	174
0500	25	22	26	46	119	31	64	99	124	318	437
0600	73	72	98	138	381	137	234	377	504	1252	1633
0700	176	182	161	211	730	443	446	472	430	1791	2521
0800	184	196	170	183	733	395	392	418	328	1533	2266
0900	187	191	169	178	725	280	272	248	256	1056	1781
1000	184	171	162	164	681	210	225	206	211	852	1533
1100	169	160	170	174	673	186	199	213	174	772	1445
1200	189	189	185	182	745	241	203	218	177	839	1584
1300	199	204	207	200	810	205	193	236	226	860	1670
1400	263	219	290	302	1074	254	280	259	264	1057	2131
1500	306	356	311	347	1320	260	302	320	295	1177	2497
1600	333	337	371	391	1432	321	328	302	289	1240	2672
1700	429	436	454	424	1743	280	301	327	270	1178	2921
1800	401	412	379	410	1602	276	253	297	262	1088	2690
1900	359	365	333	327	1384	276	241	283	274	1074	2458
2000	320	285	279	230	1114	263	201	192	208	864	1978
2100	229	204	239	221	893	165	161	166	143	635	1528
2200	203	188	146	137	674	140	102	104	85	431	1105
2300	119	132	112	84	447	89	72	85	72	318	765
24-Hour Totals:					17717					18748	36465

Peak Volume Information

	Direction: E		Direction: W		Combined Directions	
	Hour	Volume	Hour	Volume	Hour	Volume
A.M.	745	761	645	1865	645	2522
P.M.	1700	1743	1530	1264	1700	2921
Daily	1700	1743	645	1865	1700	2921

Generated by SPS 5.0.30P

County: 99
Station: 0076
Description: NW 82ND AVENUE 200' N OF MIAMI GARDENS DRIVE
Start Date: 05/03/2016
Start Time: 0000

	Direction: N					Direction: S					Combined
Time	1st	2nd	3rd	4th	Total	1st	2nd	3rd	4th	Total	Total
0000	20	16	13	13	62	8	8	7	7	30	92
0100	17	8	4	9	38	8	8	5	6	27	65
0200	6	7	5	2	20	4	4	4	1	13	33
0300	4	3	3	1	11	2	2	2	6	12	23
0400	0	0	3	3	6	7	9	13	7	36	42
0500	4	3	5	9	21	14	13	33	43	103	124
0600	13	11	21	21	66	67	70	112	144	393	459
0700	29	51	58	71	209	186	178	177	133	674	883
0800	110	149	105	83	447	202	209	228	167	806	1253
0900	71	36	27	30	164	110	90	54	74	328	492
1000	30	27	29	27	113	82	72	57	58	269	382
1100	28	40	42	48	158	57	40	42	68	207	365
1200	51	59	35	62	207	79	67	53	69	268	475
1300	50	42	72	63	227	47	67	51	72	237	464
1400	55	49	96	114	314	98	84	87	83	352	666
1500	102	117	111	139	469	163	119	82	180	544	1013
1600	94	94	75	68	331	154	88	82	60	384	715
1700	89	97	100	97	383	63	81	92	106	342	725
1800	103	98	94	86	381	97	107	77	105	386	767
1900	76	79	83	79	317	86	86	95	80	347	664
2000	75	74	83	65	297	58	75	78	43	254	551
2100	62	55	62	49	228	102	53	43	48	246	474
2200	68	41	37	40	186	48	40	34	29	151	337
2300	21	40	27	22	110	21	43	13	6	83	193
24-Hour Totals:					4765					6492	11257

Peak Volume Information

	Direction: N		Direction: S		Combined Directions	
	Hour	Volume	Hour	Volume	Hour	Volume
A.M.	800	447	800	806	800	1253
P.M.	1500	469	1500	544	1500	1013
Daily	1500	469	800	806	800	1253

Generated by SPS 5.0.30P

County: 99
Station: 0076
Description: NW 82ND AVENUE 200' N OF MIAMI GARDENS DRIVE
Start Date: 05/04/2016
Start Time: 0000

	Direction: N					Direction: S					Combined
Time	1st	2nd	3rd	4th	Total	1st	2nd	3rd	4th	Total	Total
0000	19	26	14	13	72	5	13	10	4	32	104
0100	16	11	6	4	37	5	2	6	5	18	55
0200	8	3	2	5	18	11	3	3	3	20	38
0300	5	2	1	1	9	4	2	5	5	16	25
0400	3	3	5	3	14	9	2	14	16	41	55
0500	4	1	1	7	13	22	6	33	30	91	104
0600	12	14	18	23	67	59	69	71	126	325	392
0700	36	34	63	88	221	148	135	124	123	530	751
0800	121	128	116	74	439	188	154	188	158	688	1127
0900	54	43	25	31	153	143	73	73	66	355	508
1000	24	29	39	37	129	63	61	51	63	238	367
1100	33	38	35	43	149	76	66	68	71	281	430
1200	44	52	45	43	184	53	68	43	65	229	413
1300	55	63	84	89	291	42	67	78	105	292	583
1400	85	79	65	71	300	119	84	79	52	334	634
1500	82	95	100	108	385	51	54	63	126	294	679
1600	87	76	81	89	333	122	65	72	54	313	646
1700	76	85	108	85	354	54	62	63	68	247	601
1800	78	96	91	88	353	61	70	82	50	263	616
1900	90	94	94	100	378	81	90	71	62	304	682
2000	86	69	71	53	279	61	62	41	50	214	493
2100	50	53	57	41	201	42	50	35	43	170	371
2200	45	36	27	34	142	53	35	28	15	131	273
2300	20	24	14	24	82	12	24	11	11	58	140
24-Hour Totals:					4603					5484	10087

Peak Volume Information

	Direction: N		Direction: S		Combined Directions	
	Hour	Volume	Hour	Volume	Hour	Volume
A.M.	745	453	800	688	800	1127
P.M.	1515	390	1345	387	1515	755
Daily	745	453	800	688	800	1127

Generated by SPS 5.0.30P

County: 99
Station: 0076
Description: NW 82ND AVENUE 200' N OF MIAMI GARDENS DRIVE
Start Date: 05/05/2016
Start Time: 0000

	Direction: N					Direction: S					Combined
Time	1st	2nd	3rd	4th	Total	1st	2nd	3rd	4th	Total	Total
0000	20	18	16	6	60	12	7	8	9	36	96
0100	10	9	4	5	28	10	3	6	3	22	50
0200	6	3	6	6	21	3	3	4	2	12	33
0300	2	3	1	2	8	1	6	6	3	16	24
0400	3	3	4	2	12	6	8	11	13	38	50
0500	7	2	4	6	19	13	13	27	30	83	102
0600	19	10	15	19	63	59	86	87	134	366	429
0700	38	39	53	87	217	144	167	133	155	599	816
0800	120	134	113	84	451	169	199	210	150	728	1179
0900	59	41	29	38	167	127	83	82	77	369	536
1000	39	23	21	30	113	68	60	64	58	250	363
1100	31	38	36	43	148	64	53	54	39	210	358
1200	44	45	40	48	177	46	67	59	63	235	412
1300	51	45	49	71	216	63	53	79	82	277	493
1400	67	62	79	101	309	86	79	85	104	354	663
1500	108	112	89	109	418	152	101	78	168	499	917
1600	95	91	91	92	369	119	109	85	69	382	751
1700	66	98	97	122	383	81	99	72	96	348	731
1800	99	90	94	89	372	116	90	93	95	394	766
1900	104	99	84	108	395	87	74	102	79	342	737
2000	76	94	83	67	320	83	66	73	77	299	619
2100	61	66	60	57	244	62	51	44	40	197	441
2200	63	58	36	27	184	58	41	27	38	164	348
2300	34	51	38	15	138	44	18	22	15	99	237
24-Hour Totals:					4832					6319	11151

Peak Volume Information

	Direction: N		Direction: S		Combined Directions	
	Hour	Volume	Hour	Volume	Hour	Volume
A.M.	745	454	745	733	745	1187
P.M.	1500	418	1500	499	1500	917
Daily	745	454	745	733	745	1187

Generated by SPS 5.0.30P

County: 99
Station: 0075
Description: NW 82ND AVENUE 200' S OF MIAMI GARDENS DRIVE
Start Date: 05/03/2016
Start Time: 0000

	Direction: N					Direction: S					Combined
Time	1st	2nd	3rd	4th	Total	1st	2nd	3rd	4th	Total	Total
0000	5	8	6	5	24	9	16	3	9	37	61
0100	3	5	5	0	13	2	3	4	8	17	30
0200	1	0	1	1	3	1	0	2	1	4	7
0300	1	1	3	3	8	1	1	0	1	3	11
0400	0	4	8	2	14	1	0	8	0	9	23
0500	4	7	11	24	46	4	3	14	11	32	78
0600	12	27	59	80	178	16	35	66	99	216	394
0700	93	123	134	129	479	170	150	120	118	558	1037
0800	135	173	140	59	507	163	166	102	125	556	1063
0900	79	66	54	48	247	81	77	70	53	281	528
1000	58	51	41	46	196	68	60	51	64	243	439
1100	43	36	55	54	188	57	56	62	74	249	437
1200	66	63	48	49	226	77	66	62	58	263	489
1300	58	75	67	76	276	65	87	75	86	313	589
1400	72	65	82	79	298	83	95	95	113	386	684
1500	92	115	116	112	435	106	116	93	118	433	868
1600	101	92	110	116	419	117	90	91	104	402	821
1700	127	121	110	116	474	88	117	110	107	422	896
1800	128	115	92	90	425	95	94	71	78	338	763
1900	78	69	66	74	287	78	77	65	69	289	576
2000	64	62	55	59	240	57	67	49	49	222	462
2100	42	45	37	32	156	47	53	51	48	199	355
2200	30	27	27	20	104	47	28	24	22	121	225
2300	28	31	16	13	88	21	22	20	13	76	164
24-Hour Totals:					5331					5669	11000

Peak Volume Information

	Direction: N		Direction: S		Combined Directions	
	Hour	Volume	Hour	Volume	Hour	Volume
A.M.	745	577	730	567	730	1138
P.M.	1715	475	1515	444	1715	904
Daily	745	577	730	567	730	1138

Generated by SPS 5.0.30P

County: 99
Station: 0075
Description: NW 82ND AVENUE 200' S OF MIAMI GARDENS DRIVE
Start Date: 05/04/2016
Start Time: 0000

	Direction: N					Direction: S					Combined
Time	1st	2nd	3rd	4th	Total	1st	2nd	3rd	4th	Total	Total
0000	8	8	3	6	25	13	7	9	7	36	61
0100	1	3	2	4	10	2	4	3	2	11	21
0200	0	4	2	0	6	5	2	3	2	12	18
0300	1	1	2	3	7	1	0	0	3	4	11
0400	0	2	6	2	10	1	4	4	5	14	24
0500	4	4	10	13	31	4	7	7	13	31	62
0600	21	36	66	67	190	19	26	50	115	210	400
0700	103	112	154	130	499	148	145	93	135	521	1020
0800	131	149	133	70	483	149	147	137	125	558	1041
0900	82	62	55	48	247	74	53	59	51	237	484
1000	34	44	46	44	168	47	44	47	48	186	354
1100	50	39	49	54	192	49	49	43	60	201	393
1200	74	72	69	43	258	59	71	76	52	258	516
1300	59	57	56	67	239	64	67	71	71	273	512
1400	80	62	95	83	320	84	73	62	62	281	601
1500	79	69	100	108	356	77	77	86	92	332	688
1600	97	96	72	90	355	111	89	69	88	357	712
1700	106	123	91	115	435	87	83	105	78	353	788
1800	126	119	89	78	412	94	73	66	76	309	721
1900	91	56	70	61	278	61	72	60	49	242	520
2000	54	58	53	34	199	57	43	52	44	196	395
2100	38	35	36	23	132	34	31	30	37	132	264
2200	32	19	20	16	87	26	18	18	13	75	162
2300	17	11	8	13	49	15	12	10	13	50	99
24-Hour Totals:					4988					4879	9867

Peak Volume Information

	Direction: N		Direction: S		Combined Directions	
	Hour	Volume	Hour	Volume	Hour	Volume
A.M.	730	564	745	568	745	1111
P.M.	1715	455	1530	378	1715	815
Daily	730	564	745	568	745	1111

Generated by SPS 5.0.30P

County: 99
Station: 0075
Description: NW 82ND AVENUE 200' S OF MIAMI GARDENS DRIVE
Start Date: 05/05/2016
Start Time: 0000

	Direction: N					Direction: S					Combined
Time	1st	2nd	3rd	4th	Total	1st	2nd	3rd	4th	Total	Total
0000	11	7	6	2	26	4	8	1	5	18	44
0100	2	2	0	2	6	5	2	4	2	13	19
0200	1	2	3	0	6	4	2	1	3	10	16
0300	1	1	1	2	5	2	1	2	0	5	10
0400	0	3	1	5	9	4	2	3	5	14	23
0500	9	8	14	12	43	3	10	10	10	33	76
0600	16	23	54	83	176	15	30	57	97	199	375
0700	96	106	147	138	487	146	151	102	144	543	1030
0800	128	166	131	73	498	183	153	103	108	547	1045
0900	70	52	52	56	230	88	72	59	42	261	491
1000	53	50	53	28	184	57	47	40	46	190	374
1100	51	58	48	39	196	48	58	40	50	196	392
1200	64	63	58	48	233	58	58	46	58	220	453
1300	64	56	68	61	249	56	45	57	59	217	466
1400	69	69	79	77	294	82	74	81	92	329	623
1500	109	109	113	109	440	74	112	117	99	402	842
1600	113	95	110	106	424	101	105	99	81	386	810
1700	113	133	121	136	503	106	98	101	98	403	906
1800	126	89	116	113	444	95	87	69	89	340	784
1900	91	97	87	113	388	79	87	79	63	308	696
2000	74	76	63	60	273	80	55	50	54	239	512
2100	44	72	46	51	213	45	53	50	42	190	403
2200	29	25	22	25	101	33	41	19	26	119	220
2300	34	29	32	15	110	31	20	22	11	84	194
24-Hour Totals:					5538					5266	10804

Peak Volume Information

	Direction: N		Direction: S		Combined Directions	
	Hour	Volume	Hour	Volume	Hour	Volume
A.M.	730	579	745	583	730	1161
P.M.	1715	516	1515	429	1715	908
Daily	730	579	745	583	730	1161

Generated by SPS 5.0.30P

County: 99
Station: 0077
Description: MIAMI GARDENS DRIVE 400' W OF NW 79TH AVENUE
Start Date: 05/03/2016
Start Time: 0000

	Direction: E					Direction: W					Combined
Time	1st	2nd	3rd	4th	Total	1st	2nd	3rd	4th	Total	Total
0000	59	49	48	28	184	43	49	23	32	147	331
0100	27	23	25	15	90	25	25	15	15	80	170
0200	20	13	13	10	56	17	13	16	8	54	110
0300	13	10	12	13	48	6	16	16	15	53	101
0400	10	17	25	18	70	13	24	30	34	101	171
0500	18	28	46	67	159	26	64	93	111	294	453
0600	67	108	120	180	475	128	216	339	474	1157	1632
0700	204	233	213	161	811	463	465	354	294	1576	2387
0800	187	201	219	193	800	402	420	377	376	1575	2375
0900	221	206	189	169	785	265	215	212	211	903	1688
1000	179	204	176	166	725	175	193	164	190	722	1447
1100	165	174	171	196	706	165	201	187	159	712	1418
1200	225	191	185	219	820	170	204	172	197	743	1563
1300	209	196	197	207	809	214	217	206	244	881	1690
1400	251	251	277	258	1037	223	243	289	333	1088	2125
1500	304	295	302	348	1249	290	294	274	281	1139	2388
1600	337	302	336	370	1345	235	267	199	272	973	2318
1700	398	387	428	403	1616	267	253	299	298	1117	2733
1800	409	408	444	331	1592	274	268	268	218	1028	2620
1900	312	301	315	252	1180	211	244	256	234	945	2125
2000	262	254	222	210	948	218	198	171	190	777	1725
2100	241	204	178	186	809	163	144	164	119	590	1399
2200	166	172	124	116	578	150	100	90	76	416	994
2300	118	150	92	88	448	88	68	68	48	272	720
24-Hour Totals:					17340					17343	34683

Peak Volume Information

	Direction: E		Direction: W		Combined Directions	
	Hour	Volume	Hour	Volume	Hour	Volume
A.M.	830	839	645	1756	645	2586
P.M.	1745	1664	1430	1206	1730	2787
Daily	1745	1664	645	1756	1730	2787

Generated by SPS 5.0.30P

County: 99
Station: 0077
Description: MIAMI GARDENS DRIVE 400' W OF NW 79TH AVENUE
Start Date: 05/04/2016
Start Time: 0000

	Direction: E					Direction: W					Combined
Time	1st	2nd	3rd	4th	Total	1st	2nd	3rd	4th	Total	Total
0000	55	61	52	36	204	55	39	34	37	165	369
0100	28	22	15	28	93	20	19	21	19	79	172
0200	21	7	19	9	56	20	14	12	11	57	113
0300	7	7	12	11	37	13	7	8	19	47	84
0400	11	6	21	20	58	9	17	34	31	91	149
0500	33	19	50	50	152	26	54	80	116	276	428
0600	72	93	129	156	450	108	213	341	447	1109	1559
0700	188	207	223	172	790	448	447	379	454	1728	2518
0800	169	208	215	204	796	440	393	393	344	1570	2366
0900	244	176	194	151	765	219	238	209	201	867	1632
1000	171	175	163	171	680	203	209	207	164	783	1463
1100	154	201	184	175	714	165	194	167	200	726	1440
1200	212	224	222	170	828	207	205	203	180	795	1623
1300	174	192	218	234	818	218	235	220	257	930	1748
1400	266	193	256	225	940	271	186	249	209	915	1855
1500	223	198	251	329	1001	216	237	281	261	995	1996
1600	336	357	296	357	1346	238	229	223	208	898	2244
1700	371	385	419	381	1556	249	256	254	225	984	2540
1800	394	397	371	337	1499	239	284	287	244	1054	2553
1900	314	270	285	246	1115	248	232	233	197	910	2025
2000	235	257	193	222	907	192	168	180	124	664	1571
2100	170	148	169	165	652	144	132	154	118	548	1200
2200	149	133	147	105	534	129	96	76	77	378	912
2300	82	89	63	71	305	64	47	31	57	199	504
24-Hour Totals:					16296					16768	33064

Peak Volume Information

	Direction: E		Direction: W		Combined Directions	
	Hour	Volume	Hour	Volume	Hour	Volume
A.M.	815	871	700	1728	700	2518
P.M.	1730	1591	1800	1054	1730	2593
Daily	1730	1591	700	1728	1730	2593

Generated by SPS 5.0.30P

County: 99
Station: 0077
Description: MIAMI GARDENS DRIVE 400' W OF NW 79TH AVENUE
Start Date: 05/05/2016
Start Time: 0000

	Direction: E					Direction: W					Combined
Time	1st	2nd	3rd	4th	Total	1st	2nd	3rd	4th	Total	Total
0000	53	46	45	25	169	51	35	28	14	128	297
0100	30	32	23	13	98	25	19	18	20	82	180
0200	10	20	15	12	57	18	8	15	12	53	110
0300	14	13	17	10	54	13	13	15	17	58	112
0400	14	13	20	16	63	24	16	41	38	119	182
0500	34	30	39	55	158	28	67	89	112	296	454
0600	85	98	120	162	465	136	209	356	462	1163	1628
0700	200	206	180	190	776	467	411	363	412	1653	2429
0800	162	231	226	191	810	399	404	405	322	1530	2340
0900	217	194	184	193	788	259	252	222	223	956	1744
1000	196	191	177	175	739	200	200	194	203	797	1536
1100	174	169	178	174	695	181	187	194	176	738	1433
1200	181	206	189	196	772	233	193	200	185	811	1583
1300	194	217	222	211	844	195	194	229	242	860	1704
1400	249	222	268	283	1022	244	288	296	271	1099	2121
1500	303	303	301	359	1266	311	339	361	282	1293	2559
1600	354	342	332	364	1392	311	331	276	261	1179	2571
1700	381	422	415	422	1640	271	263	304	279	1117	2757
1800	405	409	378	405	1597	283	268	279	248	1078	2675
1900	343	343	317	299	1302	274	260	250	252	1036	2338
2000	287	290	252	247	1076	259	215	203	206	883	1959
2100	218	206	234	209	867	190	170	189	162	711	1578
2200	207	182	136	135	660	159	122	105	97	483	1143
2300	122	128	107	91	448	94	85	83	74	336	784
24-Hour Totals:					17758					18459	36217

Peak Volume Information

	Direction: E		Direction: W		Combined Directions	
	Hour	Volume	Hour	Volume	Hour	Volume
A.M.	815	865	645	1703	645	2451
P.M.	1715	1664	1500	1293	1715	2793
Daily	1715	1664	645	1703	1715	2793

Generated by SPS 5.0.30P

County: 99
Station: 0078
Description: NW 79TH AVENUE 200' N OF MIAMI GARDENS DRIVE
Start Date: 05/03/2016
Start Time: 0000

	Direction: N					Direction: S					Combined
Time	1st	2nd	3rd	4th	Total	1st	2nd	3rd	4th	Total	Total
0000	27	17	24	13	81	11	17	11	12	51	132
0100	9	11	15	5	40	4	6	5	2	17	57
0200	5	2	4	2	13	2	2	2	4	10	23
0300	6	3	0	2	11	2	6	8	5	21	32
0400	2	2	3	1	8	4	17	18	13	52	60
0500	2	5	6	12	25	21	24	43	32	120	145
0600	15	17	29	49	110	66	77	84	133	360	470
0700	58	98	116	90	362	134	158	158	146	596	958
0800	136	112	77	57	382	145	164	141	87	537	919
0900	42	41	32	31	146	99	90	69	73	331	477
1000	31	41	60	45	177	62	63	75	84	284	461
1100	53	47	46	52	198	64	58	48	45	215	413
1200	47	48	58	59	212	32	63	57	58	210	422
1300	70	86	88	84	328	67	53	59	146	325	653
1400	77	72	108	96	353	96	64	67	79	306	659
1500	98	79	91	80	348	144	156	99	131	530	878
1600	80	87	94	111	372	125	71	72	85	353	725
1700	108	106	126	121	461	76	76	87	82	321	782
1800	118	105	123	115	461	89	73	74	55	291	752
1900	86	109	92	95	382	94	66	78	62	300	682
2000	89	75	91	72	327	49	46	59	49	203	530
2100	75	75	76	58	284	48	47	44	31	170	454
2200	62	46	39	45	192	32	24	25	23	104	296
2300	44	30	32	28	134	40	15	21	10	86	220
24-Hour Totals:					5407					5793	11200

Peak Volume Information

	Direction: N		Direction: S		Combined Directions	
	Hour	Volume	Hour	Volume	Hour	Volume
A.M.	730	454	730	613	730	1067
P.M.	1715	471	1500	530	1500	878
Daily	1715	471	730	613	730	1067

Generated by SPS 5.0.30P

County: 99
Station: 0078
Description: NW 79TH AVENUE 200' N OF MIAMI GARDENS DRIVE
Start Date: 05/04/2016
Start Time: 0000

	Direction: N					Direction: S					Combined
Time	1st	2nd	3rd	4th	Total	1st	2nd	3rd	4th	Total	Total
0000	19	17	19	18	73	19	16	12	7	54	127
0100	10	13	9	8	40	5	9	7	3	24	64
0200	2	3	5	3	13	2	8	0	4	14	27
0300	4	2	2	4	12	6	4	4	2	16	28
0400	4	1	2	3	10	9	7	16	16	48	58
0500	3	3	7	16	29	11	16	24	37	88	117
0600	9	19	29	42	99	60	76	91	104	331	430
0700	49	95	124	126	394	153	141	157	159	610	1004
0800	149	120	83	47	399	150	156	153	89	548	947
0900	43	39	29	36	147	106	81	71	60	318	465
1000	46	36	39	47	168	56	67	58	69	250	418
1100	39	51	46	61	197	60	53	57	51	221	418
1200	52	70	57	64	243	70	66	81	42	259	502
1300	79	99	101	110	389	46	54	49	133	282	671
1400	74	63	70	69	276	163	109	86	56	414	690
1500	70	75	74	97	316	82	53	88	112	335	651
1600	100	85	81	92	358	126	100	62	61	349	707
1700	101	103	129	134	467	80	90	69	88	327	794
1800	123	107	108	106	444	81	86	90	60	317	761
1900	86	79	79	94	338	66	54	58	67	245	583
2000	94	69	65	74	302	59	55	43	37	194	496
2100	73	60	53	67	253	39	33	40	34	146	399
2200	55	60	42	30	187	33	27	31	13	104	291
2300	37	20	25	27	109	17	11	12	13	53	162
24-Hour Totals:					5263					5547	10810

Peak Volume Information

	Direction: N		Direction: S		Combined Directions	
	Hour	Volume	Hour	Volume	Hour	Volume
A.M.	730	519	730	622	730	1141
P.M.	1730	493	1345	491	1715	817
Daily	730	519	730	622	730	1141

Generated by SPS 5.0.30P

County: 99
Station: 0078
Description: NW 79TH AVENUE 200' N OF MIAMI GARDENS DRIVE
Start Date: 05/05/2016
Start Time: 0000

	Direction: N					Direction: S					Combined
Time	1st	2nd	3rd	4th	Total	1st	2nd	3rd	4th	Total	Total
0000	21	21	18	20	80	11	11	11	5	38	118
0100	7	16	7	8	38	6	6	2	3	17	55
0200	4	3	4	5	16	6	4	1	0	11	27
0300	1	1	0	3	5	10	2	3	6	21	26
0400	5	3	0	0	8	4	8	14	14	40	48
0500	1	6	5	10	22	11	19	25	40	95	117
0600	17	13	24	40	94	62	80	91	107	340	434
0700	66	96	101	122	385	146	154	141	152	593	978
0800	150	126	62	44	382	157	154	139	84	534	916
0900	34	39	51	51	175	68	77	91	108	344	519
1000	47	40	54	45	186	87	61	75	69	292	478
1100	53	48	40	48	189	65	56	54	54	229	418
1200	53	60	53	56	222	65	62	61	41	229	451
1300	59	68	93	78	298	48	61	59	128	296	594
1400	73	65	81	100	319	90	77	50	63	280	599
1500	89	97	70	93	349	146	172	97	115	530	879
1600	84	93	91	124	392	94	78	69	70	311	703
1700	99	121	120	124	464	78	84	96	77	335	799
1800	121	120	102	117	460	106	77	78	56	317	777
1900	112	100	115	99	426	65	75	61	77	278	704
2000	78	78	90	103	349	76	55	56	56	243	592
2100	58	74	92	84	308	50	64	31	40	185	493
2200	53	51	54	36	194	36	36	33	20	125	319
2300	29	58	46	49	182	37	18	25	20	100	282
24-Hour Totals:					5543					5783	11326

Peak Volume Information

	Direction: N		Direction: S		Combined Directions	
	Hour	Volume	Hour	Volume	Hour	Volume
A.M.	730	499	715	604	730	1103
P.M.	1715	486	1500	530	1500	879
Daily	730	499	715	604	730	1103

Generated by SPS 5.0.30P

County: 99
Station: 0079
Description: MIAMI GARDENS DRIVE 400' W OF CANAL
Start Date: 05/03/2016
Start Time: 0000

	Direction: E					Direction: W					Combined
Time	1st	2nd	3rd	4th	Total	1st	2nd	3rd	4th	Total	Total
0000	54	51	49	30	184	54	51	40	39	184	368
0100	24	24	26	13	87	28	33	24	17	102	189
0200	20	10	14	10	54	20	12	19	7	58	112
0300	14	13	16	13	56	8	17	12	14	51	107
0400	12	27	32	26	97	13	23	29	27	92	189
0500	28	41	65	80	214	24	62	87	101	274	488
0600	100	138	148	247	633	122	194	333	464	1113	1746
0700	261	303	275	224	1063	456	459	368	276	1559	2622
0800	231	255	266	254	1006	430	422	383	349	1584	2590
0900	261	237	212	194	904	238	209	203	206	856	1760
1000	203	216	203	193	815	160	182	199	176	717	1532
1100	192	182	182	199	755	181	209	199	179	768	1523
1200	222	202	196	232	852	179	198	183	227	787	1639
1300	198	199	206	261	864	210	253	242	274	979	1843
1400	296	252	283	268	1099	230	268	341	347	1186	2285
1500	338	333	311	391	1373	289	271	274	277	1111	2484
1600	368	295	322	345	1330	232	285	226	276	1019	2349
1700	383	376	407	391	1557	298	277	346	319	1240	2797
1800	405	395	431	305	1536	299	296	309	259	1163	2699
1900	324	288	329	240	1181	238	262	272	242	1014	2195
2000	266	249	233	220	968	264	214	210	209	897	1865
2100	243	202	182	181	808	196	186	191	146	719	1527
2200	158	180	121	116	575	162	119	102	95	478	1053
2300	121	138	92	85	436	103	72	77	72	324	760
24-Hour Totals:					18447					18275	36722

Peak Volume Information

	Direction: E		Direction: W		Combined Directions	
	Hour	Volume	Hour	Volume	Hour	Volume
A.M.	645	1086	645	1747	645	2833
P.M.	1745	1622	1730	1260	1730	2858
Daily	1745	1622	645	1747	1730	2858

Generated by SPS 5.0.30P

County: 99
Station: 0079
Description: MIAMI GARDENS DRIVE 400' W OF CANAL
Start Date: 05/04/2016
Start Time: 0000

	Direction: E					Direction: W					Combined
Time	1st	2nd	3rd	4th	Total	1st	2nd	3rd	4th	Total	Total
0000	61	61	56	34	212	54	41	44	48	187	399
0100	26	27	16	22	91	25	30	21	16	92	183
0200	22	15	16	11	64	21	18	14	13	66	130
0300	8	10	13	9	40	12	7	7	20	46	86
0400	15	8	29	31	83	9	13	32	27	81	164
0500	39	27	63	67	196	23	52	76	110	261	457
0600	105	120	171	206	602	99	193	337	443	1072	1674
0700	259	280	268	190	997	398	450	396	493	1737	2734
0800	230	264	284	240	1018	439	399	377	309	1524	2542
0900	283	206	224	171	884	210	212	196	204	822	1706
1000	183	191	184	190	748	192	209	193	166	760	1508
1100	174	206	208	195	783	163	199	194	211	767	1550
1200	224	238	249	174	885	217	225	205	199	846	1731
1300	183	190	214	291	878	261	278	282	291	1112	1990
1400	347	242	288	248	1125	257	197	264	230	948	2073
1500	244	202	259	334	1039	243	249	298	284	1074	2113
1600	361	368	310	336	1375	228	245	239	230	942	2317
1700	374	382	420	366	1542	268	298	291	286	1143	2685
1800	392	403	369	315	1479	271	313	300	270	1154	2633
1900	317	277	291	255	1140	257	259	267	229	1012	2152
2000	235	260	197	219	911	218	178	203	157	756	1667
2100	171	152	170	161	654	175	162	170	151	658	1312
2200	143	129	151	103	526	148	117	88	86	439	965
2300	82	89	61	63	295	82	52	43	58	235	530
24-Hour Totals:					17567					17734	35301

Peak Volume Information

	Direction: E		Direction: W		Combined Directions	
	Hour	Volume	Hour	Volume	Hour	Volume
A.M.	815	1071	715	1778	715	2746
P.M.	1730	1581	1745	1170	1730	2742
Daily	1730	1581	715	1778	715	2746

Generated by SPS 5.0.30P

County: 99
Station: 0079
Description: MIAMI GARDENS DRIVE 400' W OF CANAL
Start Date: 05/05/2016
Start Time: 0000

	Direction: E					Direction: W					Combined
Time	1st	2nd	3rd	4th	Total	1st	2nd	3rd	4th	Total	Total
0000	51	46	51	21	169	60	45	40	23	168	337
0100	32	26	24	12	94	25	26	23	23	97	191
0200	14	22	15	9	60	21	11	16	15	63	123
0300	20	14	17	11	62	9	12	12	18	51	113
0400	14	16	26	23	79	23	16	31	29	99	178
0500	44	40	51	74	209	29	66	79	109	283	492
0600	110	141	153	212	616	118	190	334	473	1115	1731
0700	265	281	244	242	1032	470	384	365	434	1653	2685
0800	219	301	293	227	1040	438	410	370	301	1519	2559
0900	241	226	214	236	917	256	250	204	213	923	1840
1000	227	213	207	203	850	196	196	205	203	800	1650
1100	188	185	193	195	761	187	184	205	197	773	1534
1200	183	231	211	212	837	223	207	207	219	856	1693
1300	203	226	232	263	924	213	222	269	265	969	1893
1400	292	255	272	285	1104	260	318	320	312	1210	2314
1500	357	349	334	321	1361	332	312	329	292	1265	2626
1600	397	333	331	345	1406	320	337	291	288	1236	2642
1700	364	418	413	395	1590	284	307	335	315	1241	2831
1800	399	404	371	374	1548	314	292	303	299	1208	2756
1900	324	345	309	300	1278	288	275	289	281	1133	2411
2000	296	290	260	247	1093	252	234	248	232	966	2059
2100	224	227	203	204	858	209	209	198	189	805	1663
2200	206	183	131	130	650	174	140	118	111	543	1193
2300	129	118	103	97	447	96	116	98	106	416	863
24-Hour Totals:					18985					19392	38377

Peak Volume Information

	Direction: E		Direction: W		Combined Directions	
	Hour	Volume	Hour	Volume	Hour	Volume
A.M.	815	1062	645	1692	745	2707
P.M.	1715	1625	1445	1285	1715	2896
Daily	1715	1625	645	1692	1715	2896

Generated by SPS 5.0.30P

County: 99
Station: 0080
Description: NW 75TH PLACE 200' S OF MIAMI GARDENS DRIVE
Start Date: 05/03/2016
Start Time: 0000

	Direction: N					Direction: S					Combined
Time	1st	2nd	3rd	4th	Total	1st	2nd	3rd	4th	Total	Total
0000	21	21	6	8	56	14	17	25	16	72	128
0100	8	11	4	9	32	10	10	7	9	36	68
0200	2	1	6	3	12	2	6	5	6	19	31
0300	3	2	6	3	14	5	2	4	2	13	27
0400	4	5	11	9	29	2	3	8	15	28	57
0500	10	7	20	27	64	9	10	20	25	64	128
0600	34	47	60	82	223	38	80	86	140	344	567
0700	104	93	81	93	371	155	164	155	146	620	991
0800	94	107	104	106	411	157	131	141	152	581	992
0900	92	72	78	73	315	129	99	71	92	391	706
1000	59	81	46	62	248	82	80	78	78	318	566
1100	71	56	86	64	277	80	62	72	69	283	560
1200	44	60	46	66	216	74	75	63	71	283	499
1300	86	77	76	73	312	73	92	83	106	354	666
1400	85	72	103	91	351	78	96	103	82	359	710
1500	104	91	103	103	401	80	110	102	110	402	803
1600	106	103	102	105	416	96	114	123	102	435	851
1700	117	108	111	143	479	114	114	97	106	431	910
1800	124	128	104	104	460	119	127	95	122	463	923
1900	130	120	98	102	450	101	95	108	99	403	853
2000	95	86	104	67	352	92	83	90	71	336	688
2100	62	82	57	54	255	69	88	80	60	297	552
2200	59	40	43	36	178	51	43	37	46	177	355
2300	36	23	26	25	110	47	26	27	28	128	238
24-Hour Totals:					6032					6837	12869

Peak Volume Information

	Direction: N		Direction: S		Combined Directions	
	Hour	Volume	Hour	Volume	Hour	Volume
A.M.	800	411	715	622	800	992
P.M.	1730	506	1800	463	1730	955
Daily	1730	506	715	622	800	992

Generated by SPS 5.0.30P

County: 99
Station: 0080
Description: NW 75TH PLACE 200' S OF MIAMI GARDENS DRIVE
Start Date: 05/04/2016
Start Time: 0000

	Direction: N					Direction: S					Combined
Time	1st	2nd	3rd	4th	Total	1st	2nd	3rd	4th	Total	Total
0000	17	20	16	9	62	15	15	19	14	63	125
0100	8	12	14	7	41	15	10	8	12	45	86
0200	5	1	6	1	13	5	5	5	4	19	32
0300	4	2	5	3	14	1	4	3	4	12	26
0400	5	5	9	11	30	1	6	13	6	26	56
0500	8	8	16	14	46	7	10	21	32	70	116
0600	41	48	56	79	224	39	69	97	139	344	568
0700	102	85	81	84	352	168	143	167	122	600	952
0800	95	101	118	112	426	119	163	161	141	584	1010
0900	107	90	67	58	322	132	100	86	90	408	730
1000	59	68	77	62	266	60	64	76	76	276	542
1100	45	55	60	61	221	72	60	80	73	285	506
1200	95	81	77	63	316	83	91	67	78	319	635
1300	77	73	63	74	287	81	92	90	92	355	642
1400	100	99	100	72	371	86	107	88	106	387	758
1500	93	85	114	95	387	76	102	106	114	398	785
1600	112	102	87	109	410	118	110	98	119	445	855
1700	120	109	109	121	459	113	106	119	124	462	921
1800	151	127	128	130	536	118	120	120	112	470	1006
1900	99	120	100	88	407	104	100	87	87	378	785
2000	83	93	88	80	344	73	75	98	88	334	678
2100	74	73	56	45	248	70	77	61	61	269	517
2200	61	51	39	48	199	52	58	43	52	205	404
2300	58	22	32	24	136	40	37	39	24	140	276
24-Hour Totals:					6117					6894	13011

Peak Volume Information

	Direction: N		Direction: S		Combined Directions	
	Hour	Volume	Hour	Volume	Hour	Volume
A.M.	815	438	645	617	815	1035
P.M.	1800	536	1745	482	1745	1009
Daily	1800	536	645	617	815	1035

Generated by SPS 5.0.30P

County: 99
Station: 0080
Description: NW 75TH PLACE 200' S OF MIAMI GARDENS DRIVE
Start Date: 05/05/2016
Start Time: 0000

	Direction: N					Direction: S					Combined
Time	1st	2nd	3rd	4th	Total	1st	2nd	3rd	4th	Total	Total
0000	20	17	15	10	62	26	16	19	18	79	141
0100	4	8	7	5	24	7	10	5	6	28	52
0200	6	9	3	3	21	5	8	2	5	20	41
0300	1	3	6	2	12	6	4	6	0	16	28
0400	7	6	4	10	27	7	3	8	5	23	50
0500	6	10	19	21	56	5	16	18	33	72	128
0600	35	49	62	77	223	53	78	95	139	365	588
0700	100	63	83	53	299	155	177	152	142	626	925
0800	101	94	87	93	375	143	148	146	171	608	983
0900	96	57	64	75	292	120	102	91	71	384	676
1000	58	72	71	48	249	87	66	94	60	307	556
1100	48	56	56	62	222	72	72	59	73	276	498
1200	71	73	57	54	255	76	74	76	91	317	572
1300	71	62	79	72	284	63	85	82	66	296	580
1400	64	68	87	89	308	82	96	103	101	382	690
1500	91	95	102	92	380	86	100	106	111	403	783
1600	106	99	110	100	415	97	115	117	122	451	866
1700	126	119	130	131	506	114	114	134	123	485	991
1800	127	101	107	104	439	100	116	131	109	456	895
1900	116	104	102	84	406	88	106	94	68	356	762
2000	86	87	88	91	352	79	81	86	79	325	677
2100	71	77	56	76	280	79	75	67	69	290	570
2200	58	52	57	41	208	70	56	34	36	196	404
2300	35	29	28	27	119	29	27	27	34	117	236
24-Hour Totals:					5814					6878	12692

Peak Volume Information

	Direction: N		Direction: S		Combined Directions	
	Hour	Volume	Hour	Volume	Hour	Volume
A.M.	800	375	700	626	800	983
P.M.	1715	507	1700	485	1700	991
Daily	1715	507	700	626	1700	991

Generated by SPS 5.0.30P

County: 99
Station: 0081
Description: MIAMI GARDENS DRIVE 200' E OF NW 75TH PLACE
Start Date: 05/03/2016
Start Time: 0000

	Direction: E					Direction: W					Combined
Time	1st	2nd	3rd	4th	Total	1st	2nd	3rd	4th	Total	Total
0000	68	60	67	34	229	57	62	53	37	209	438
0100	30	27	24	15	96	31	34	25	19	109	205
0200	21	10	16	11	58	20	14	14	10	58	116
0300	20	16	17	15	68	9	19	12	14	54	122
0400	16	29	33	31	109	11	18	29	23	81	190
0500	30	39	79	83	231	29	62	85	95	271	502
0600	98	142	167	229	636	121	201	338	461	1121	1757
0700	321	322	212	190	1045	505	547	368	281	1701	2746
0800	182	225	304	311	1022	398	465	379	361	1603	2625
0900	332	255	249	233	1069	279	240	238	243	1000	2069
1000	227	202	209	196	834	182	193	194	198	767	1601
1100	223	199	205	232	859	203	224	189	191	807	1666
1200	231	247	221	228	927	207	229	217	241	894	1821
1300	235	234	228	269	966	231	251	258	278	1018	1984
1400	299	279	285	282	1145	262	307	366	349	1284	2429
1500	321	364	320	435	1440	299	263	302	316	1180	2620
1600	395	357	334	369	1455	259	304	274	281	1118	2573
1700	402	431	421	417	1671	317	314	362	328	1321	2992
1800	413	412	466	353	1644	309	322	307	325	1263	2907
1900	336	343	333	273	1285	241	269	300	242	1052	2337
2000	306	258	248	245	1057	278	241	248	243	1010	2067
2100	273	226	201	203	903	212	201	213	168	794	1697
2200	168	182	137	109	596	164	124	123	119	530	1126
2300	149	133	103	83	468	107	89	86	69	351	819
24-Hour Totals:					19813					19596	39409

Peak Volume Information

	Direction: E		Direction: W		Combined Directions	
	Hour	Volume	Hour	Volume	Hour	Volume
A.M.	830	1202	645	1881	645	2965
P.M.	1745	1708	1415	1321	1715	2995
Daily	1745	1708	645	1881	1715	2995

Generated by SPS 5.0.30P

County: 99
Station: 0081
Description: MIAMI GARDENS DRIVE 200' E OF NW 75TH PLACE
Start Date: 05/04/2016
Start Time: 0000

	Direction: E					Direction: W					Combined
Time	1st	2nd	3rd	4th	Total	1st	2nd	3rd	4th	Total	Total
0000	74	61	56	40	231	57	52	50	43	202	433
0100	26	35	24	25	110	29	32	23	19	103	213
0200	22	15	22	14	73	19	17	17	13	66	139
0300	11	9	16	14	50	15	12	8	17	52	102
0400	11	13	34	32	90	8	17	27	22	74	164
0500	39	30	66	73	208	24	49	83	94	250	458
0600	124	125	182	230	661	114	196	360	451	1121	1782
0700	243	314	181	197	935	504	465	423	401	1793	2728
0800	223	280	288	277	1068	412	453	358	352	1575	2643
0900	316	232	238	200	986	243	225	196	230	894	1880
1000	217	215	221	188	841	190	223	208	188	809	1650
1100	206	200	227	210	843	189	220	216	225	850	1693
1200	240	250	260	182	932	217	261	220	226	924	1856
1300	198	228	217	288	931	267	277	299	288	1131	2062
1400	333	269	316	262	1180	260	208	294	259	1021	2201
1500	264	253	252	371	1140	260	274	324	316	1174	2314
1600	398	370	323	364	1455	258	268	241	270	1037	2492
1700	407	422	445	399	1673	312	322	315	321	1270	2943
1800	437	411	415	345	1608	297	343	297	291	1228	2836
1900	331	324	311	273	1239	281	279	288	241	1089	2328
2000	254	266	220	221	961	237	186	214	173	810	1771
2100	201	168	184	174	727	184	180	184	167	715	1442
2200	170	142	144	131	587	155	126	106	89	476	1063
2300	87	98	64	70	319	86	50	58	61	255	574
24-Hour Totals:					18848					18919	37767

Peak Volume Information

	Direction: E		Direction: W		Combined Directions	
	Hour	Volume	Hour	Volume	Hour	Volume
A.M.	815	1161	645	1843	645	2811
P.M.	1715	1703	1730	1276	1730	2968
Daily	1715	1703	645	1843	1730	2968

Generated by SPS 5.0.30P

County: 99
Station: 0081
Description: MIAMI GARDENS DRIVE 200' E OF NW 75TH PLACE
Start Date: 05/05/2016
Start Time: 0000

	Direction: E					Direction: W					Combined
Time	1st	2nd	3rd	4th	Total	1st	2nd	3rd	4th	Total	Total
0000	67	58	58	31	214	66	46	43	29	184	398
0100	48	23	27	21	119	26	22	22	27	97	216
0200	19	19	17	12	67	14	14	14	15	57	124
0300	21	18	22	10	71	8	9	15	22	54	125
0400	18	20	32	25	95	19	19	31	22	91	186
0500	45	41	48	78	212	27	55	85	91	258	470
0600	111	146	170	224	651	122	190	334	484	1130	1781
0700	293	301	232	235	1061	500	461	331	428	1720	2781
0800	227	259	296	284	1066	414	427	329	385	1555	2621
0900	303	258	239	264	1064	290	251	216	232	989	2053
1000	233	236	247	222	938	220	228	221	203	872	1810
1100	226	183	214	228	851	217	210	232	230	889	1740
1200	211	238	237	218	904	254	209	226	239	928	1832
1300	237	254	242	264	997	222	251	284	265	1022	2019
1400	327	280	314	296	1217	277	319	340	316	1252	2469
1500	355	354	350	361	1420	371	317	329	356	1373	2793
1600	436	384	347	348	1515	364	344	322	303	1333	2848
1700	401	443	447	447	1738	316	346	377	342	1381	3119
1800	452	453	422	392	1719	347	310	331	324	1312	3031
1900	392	347	339	302	1380	301	300	315	305	1221	2601
2000	311	315	282	285	1193	289	243	268	247	1047	2240
2100	238	241	213	220	912	219	233	226	202	880	1792
2200	213	186	140	153	692	176	165	120	124	585	1277
2300	148	151	109	112	520	100	118	112	108	438	958
24-Hour Totals:					20616					20668	41284

Peak Volume Information

	Direction: E		Direction: W		Combined Directions	
	Hour	Volume	Hour	Volume	Hour	Volume
A.M.	815	1142	645	1776	645	2826
P.M.	1730	1799	1715	1412	1715	3201
Daily	1730	1799	630	1779	1715	3201

Generated by SPS 5.0.30P

County: 99
Station: 0082
Description: NW 73RD AVENUE 200' S OF MIAMI GARDENS DRIVE
Start Date: 05/03/2016
Start Time: 0000

	Direction: N					Direction: S					Combined
Time	1st	2nd	3rd	4th	Total	1st	2nd	3rd	4th	Total	Total
0000	8	14	10	5	37	15	13	12	7	47	84
0100	4	2	3	3	12	4	7	1	4	16	28
0200	3	1	2	0	6	4	5	4	1	14	20
0300	5	6	2	3	16	2	1	1	2	6	22
0400	5	10	4	2	21	2	2	3	4	11	32
0500	12	18	23	28	81	5	6	8	14	33	114
0600	52	71	129	129	381	18	19	22	20	79	460
0700	143	164	114	124	545	32	43	39	53	167	712
0800	102	79	87	66	334	58	75	70	44	247	581
0900	34	41	32	32	139	27	24	21	25	97	236
1000	35	33	38	17	123	30	20	24	28	102	225
1100	33	35	32	33	133	24	29	38	38	129	262
1200	31	25	31	33	120	40	35	32	35	142	262
1300	36	28	46	63	173	32	44	50	51	177	350
1400	64	72	72	85	293	63	59	62	68	252	545
1500	44	40	54	80	218	55	63	73	82	273	491
1600	41	56	51	65	213	101	79	79	89	348	561
1700	50	57	57	60	224	86	99	91	98	374	598
1800	51	73	78	60	262	89	120	105	97	411	673
1900	65	51	35	42	193	69	81	60	59	269	462
2000	43	41	42	39	165	53	69	69	64	255	420
2100	40	29	19	26	114	47	66	55	45	213	327
2200	26	23	29	16	94	45	45	40	33	163	257
2300	16	17	6	12	51	39	21	20	18	98	149
24-Hour Totals:					3948					3923	7871

Peak Volume Information

	Direction: N		Direction: S		Combined Directions	
	Hour	Volume	Hour	Volume	Hour	Volume
A.M.	645	550	745	256	700	712
P.M.	1400	293	1745	412	1745	674
Daily	630	565	1745	412	700	712

Generated by SPS 5.0.30P

County: 99
Station: 0082
Description: NW 73RD AVENUE 200' S OF MIAMI GARDENS DRIVE
Start Date: 05/04/2016
Start Time: 0000

	Direction: N					Direction: S					Combined
Time	1st	2nd	3rd	4th	Total	1st	2nd	3rd	4th	Total	Total
0000	14	7	4	11	36	21	9	12	9	51	87
0100	3	10	2	5	20	6	7	4	4	21	41
0200	2	1	1	4	8	2	5	3	3	13	21
0300	0	3	5	2	10	2	1	2	2	7	17
0400	2	7	11	6	26	2	1	4	2	9	35
0500	16	18	13	37	84	5	10	7	8	30	114
0600	48	46	130	120	344	8	29	20	25	82	426
0700	176	150	117	106	549	32	35	27	30	124	673
0800	132	85	76	64	357	46	68	53	67	234	591
0900	42	39	26	44	151	31	24	30	27	112	263
1000	41	26	29	31	127	18	23	23	27	91	218
1100	38	34	20	30	122	38	29	29	31	127	249
1200	37	28	28	45	138	35	32	45	30	142	280
1300	36	39	46	82	203	43	36	47	67	193	396
1400	55	75	51	46	227	95	66	57	54	272	499
1500	37	44	39	41	161	38	52	57	78	225	386
1600	52	60	29	46	187	69	76	77	54	276	463
1700	52	59	32	54	197	79	90	109	90	368	565
1800	58	66	52	46	222	120	108	90	84	402	624
1900	53	55	41	52	201	97	76	72	64	309	510
2000	42	38	39	34	153	63	70	57	49	239	392
2100	29	31	34	26	120	49	71	46	46	212	332
2200	29	17	22	16	84	46	47	39	25	157	241
2300	9	8	23	14	54	30	17	25	27	99	153
24-Hour Totals:					3781					3795	7576

Peak Volume Information

	Direction: N		Direction: S		Combined Directions	
	Hour	Volume	Hour	Volume	Hour	Volume
A.M.	645	563	800	234	645	682
P.M.	1345	263	1730	427	1745	638
Daily	630	576	1730	427	630	688

Generated by SPS 5.0.30P

County: 99
Station: 0082
Description: NW 73RD AVENUE 200' S OF MIAMI GARDENS DRIVE
Start Date: 05/05/2016
Start Time: 0000

	Direction: N					Direction: S					Combined
Time	1st	2nd	3rd	4th	Total	1st	2nd	3rd	4th	Total	Total
0000	10	11	11	1	33	9	10	12	10	41	74
0100	2	11	2	8	23	5	7	6	4	22	45
0200	5	1	2	2	10	8	2	2	3	15	25
0300	3	3	3	1	10	1	1	2	0	4	14
0400	6	7	3	7	23	1	2	3	5	11	34
0500	10	16	23	33	82	7	9	8	17	41	123
0600	51	74	124	132	381	16	21	18	31	86	467
0700	147	163	134	120	564	40	39	43	32	154	718
0800	97	87	75	48	307	56	49	65	35	205	512
0900	45	36	46	34	161	38	30	32	23	123	284
1000	47	33	28	34	142	22	24	38	25	109	251
1100	18	28	27	27	100	24	22	26	25	97	197
1200	26	29	33	21	109	34	36	30	30	130	239
1300	37	25	39	41	142	30	39	33	63	165	307
1400	45	95	64	73	277	70	52	59	70	251	528
1500	50	43	53	75	221	57	83	53	78	271	492
1600	57	38	52	61	208	82	79	74	97	332	540
1700	60	36	61	73	230	97	79	92	102	370	600
1800	72	61	57	40	230	110	97	100	63	370	600
1900	60	58	48	46	212	78	84	75	76	313	525
2000	31	45	43	30	149	61	78	57	71	267	416
2100	40	41	41	30	152	63	63	68	57	251	403
2200	22	25	20	19	86	39	56	47	22	164	250
2300	16	20	18	10	64	28	27	30	12	97	161
24-Hour Totals:					3916					3889	7805

Peak Volume Information

	Direction: N		Direction: S		Combined Directions	
	Hour	Volume	Hour	Volume	Hour	Volume
A.M.	645	576	800	205	645	729
P.M.	1415	282	1745	409	1745	672
Daily	645	576	1745	409	645	729

Generated by SPS 5.0.30P

County: 99
Station: 0083
Description: MIAMI GARDENS DRIVE 1000' E OF NW 73RD AVENUE
Start Date: 05/10/2016
Start Time: 0000

	Direction: E					Direction: W					Combined
Time	1st	2nd	3rd	4th	Total	1st	2nd	3rd	4th	Total	Total
0000	75	52	34	36	197	77	77	65	40	259	456
0100	46	20	24	27	117	28	43	21	33	125	242
0200	12	15	12	26	65	15	23	14	16	68	133
0300	10	13	19	12	54	18	12	8	18	56	110
0400	22	25	33	29	109	15	12	25	29	81	190
0500	29	41	81	103	254	21	45	75	92	233	487
0600	140	175	184	258	757	93	188	269	362	912	1669
0700	336	299	233	257	1125	408	401	343	341	1493	2618
0800	303	302	296	246	1147	340	345	317	335	1337	2484
0900	253	259	231	206	949	267	225	186	201	879	1828
1000	212	205	237	227	881	197	202	193	183	775	1656
1100	204	214	258	235	911	190	186	236	211	823	1734
1200	221	220	227	227	895	228	230	224	228	910	1805
1300	251	212	220	239	922	226	251	256	272	1005	1927
1400	266	267	253	279	1065	243	304	307	294	1148	2213
1500	342	315	334	383	1374	300	283	315	368	1266	2640
1600	424	320	327	329	1400	305	321	320	306	1252	2652
1700	333	347	401	378	1459	335	365	337	381	1418	2877
1800	399	353	381	363	1496	361	322	313	334	1330	2826
1900	315	316	314	249	1194	292	305	298	257	1152	2346
2000	268	261	277	243	1049	246	239	235	238	958	2007
2100	208	236	197	187	828	224	266	218	196	904	1732
2200	158	148	139	113	558	185	137	131	117	570	1128
2300	109	89	82	62	342	117	105	89	88	399	741
24-Hour Totals:					19148					19353	38501

Peak Volume Information

	Direction: E		Direction: W		Combined Directions	
	Hour	Volume	Hour	Volume	Hour	Volume
A.M.	745	1158	645	1514	645	2640
P.M.	1730	1531	1715	1444	1715	2969
Daily	1730	1531	645	1514	1715	2969

Generated by SPS 5.0.30P

County: 99
Station: 0083
Description: MIAMI GARDENS DRIVE 1000' E OF NW 73RD AVENUE
Start Date: 05/11/2016
Start Time: 0000

	Direction: E					Direction: W					Combined
Time	1st	2nd	3rd	4th	Total	1st	2nd	3rd	4th	Total	Total
0000	83	56	47	46	232	75	61	54	32	222	454
0100	35	29	32	24	120	38	29	25	27	119	239
0200	16	12	22	17	67	30	25	13	15	83	150
0300	14	17	18	15	64	12	13	15	14	54	118
0400	17	14	27	30	88	22	14	39	22	97	185
0500	36	43	72	95	246	22	47	61	89	219	465
0600	142	129	231	258	760	113	185	284	377	959	1719
0700	330	294	194	226	1044	374	378	366	365	1483	2527
0800	258	234	229	193	914	338	399	348	332	1417	2331
0900	296	212	239	188	935	266	204	241	216	927	1862
1000	181	203	228	189	801	155	188	177	171	691	1492
1100	230	200	222	191	843	190	206	206	204	806	1649
1200	233	249	261	182	925	232	213	238	234	917	1842
1300	216	217	187	244	864	266	274	297	304	1141	2005
1400	326	337	339	332	1334	287	282	283	261	1113	2447
1500	281	220	214	334	1049	273	277	347	360	1257	2306
1600	414	323	303	333	1373	253	306	237	277	1073	2446
1700	345	366	358	399	1468	318	350	351	367	1386	2854
1800	339	390	366	370	1465	343	358	326	326	1353	2818
1900	335	318	288	273	1214	313	303	280	265	1161	2375
2000	261	254	233	216	964	240	240	257	214	951	1915
2100	203	209	188	148	748	206	252	211	210	879	1627
2200	152	128	134	129	543	175	158	135	119	587	1130
2300	138	96	81	74	389	122	102	104	78	406	795
24-Hour Totals:					18450					19301	37751

Peak Volume Information

	Direction: E		Direction: W		Combined Directions	
	Hour	Volume	Hour	Volume	Hour	Volume
A.M.	645	1076	645	1495	645	2571
P.M.	1745	1494	1730	1419	1730	2905
Daily	1745	1494	645	1495	1730	2905

Generated by SPS 5.0.30P

County: 99
Station: 0083
Description: MIAMI GARDENS DRIVE 1000' E OF NW 73RD AVENUE
Start Date: 05/12/2016
Start Time: 0000

	Direction: E					Direction: W					Combined
Time	1st	2nd	3rd	4th	Total	1st	2nd	3rd	4th	Total	Total
0000	72	59	48	31	210	77	63	44	50	234	444
0100	39	28	32	22	121	38	30	31	21	120	241
0200	29	20	17	22	88	27	17	15	22	81	169
0300	9	18	12	12	51	22	16	15	22	75	126
0400	20	23	32	34	109	15	18	32	20	85	194
0500	37	39	78	94	248	28	46	67	79	220	468
0600	120	178	196	272	766	111	177	281	331	900	1666
0700	320	308	312	247	1187	411	450	239	308	1408	2595
0800	246	260	309	253	1068	361	348	330	291	1330	2398
0900	275	238	233	229	975	279	207	230	179	895	1870
1000	214	209	236	215	874	210	197	194	178	779	1653
1100	200	188	159	207	754	165	207	186	226	784	1538
1200	197	220	233	226	876	225	229	236	255	945	1821
1300	203	221	209	230	863	221	252	242	248	963	1826
1400	285	253	244	297	1079	248	295	341	277	1161	2240
1500	337	314	337	384	1372	281	335	296	344	1256	2628
1600	384	314	334	351	1383	294	299	319	366	1278	2661
1700	324	377	364	401	1466	305	363	384	349	1401	2867
1800	410	370	358	340	1478	337	323	318	320	1298	2776
1900	322	311	334	258	1225	310	292	269	270	1141	2366
2000	274	238	284	246	1042	274	262	242	237	1015	2057
2100	221	218	226	191	856	233	230	224	240	927	1783
2200	171	164	130	124	589	202	148	136	129	615	1204
2300	131	112	86	79	408	117	90	94	73	374	782
24-Hour Totals:					19088					19285	38373

Peak Volume Information

	Direction: E		Direction: W		Combined Directions	
	Hour	Volume	Hour	Volume	Hour	Volume
A.M.	645	1212	645	1431	645	2643
P.M.	1715	1552	1715	1433	1715	2985
Daily	1715	1552	630	1473	1715	2985

Generated by SPS 5.0.30P

County: 99
Station: 0084
Description: NW 68TH AVENUE 200' S OF MIAMI GARDENS DRIVE
Start Date: 05/10/2016
Start Time: 0000

	Direction: N					Direction: S					Combined
Time	1st	2nd	3rd	4th	Total	1st	2nd	3rd	4th	Total	Total
0000	17	23	25	15	80	43	31	21	21	116	196
0100	18	12	13	7	50	20	12	7	11	50	100
0200	1	7	11	2	21	5	10	6	7	28	49
0300	5	7	3	6	21	8	7	8	5	28	49
0400	5	12	6	17	40	10	9	17	8	44	84
0500	9	16	31	37	93	15	14	27	26	82	175
0600	46	77	118	106	347	42	57	35	78	212	559
0700	124	174	141	145	584	126	81	53	50	310	894
0800	130	116	92	87	425	58	82	81	72	293	718
0900	81	56	67	73	277	65	82	86	48	281	558
1000	92	66	52	57	267	62	74	62	58	256	523
1100	56	54	63	57	230	65	62	73	76	276	506
1200	66	73	70	90	299	77	71	92	56	296	595
1300	60	69	68	83	280	76	71	64	79	290	570
1400	70	153	114	99	436	105	108	98	101	412	848
1500	96	66	79	83	324	101	103	111	100	415	739
1600	104	86	90	91	371	91	132	118	120	461	832
1700	93	83	107	98	381	127	127	129	154	537	918
1800	97	103	80	89	369	140	142	144	149	575	944
1900	101	89	106	96	392	150	137	129	113	529	921
2000	102	87	81	79	349	104	117	114	110	445	794
2100	70	88	112	97	367	104	102	100	95	401	768
2200	49	42	37	46	174	98	82	56	62	298	472
2300	43	37	31	25	136	65	49	53	27	194	330
24-Hour Totals:					6313					6829	13142

Peak Volume Information

	Direction: N		Direction: S		Combined Directions	
	Hour	Volume	Hour	Volume	Hour	Volume
A.M.	715	590	645	338	700	894
P.M.	1415	462	1745	580	1730	970
Daily	715	590	1815	585	1730	970

Generated by SPS 5.0.30P

County: 99
Station: 0084
Description: NW 68TH AVENUE 200' S OF MIAMI GARDENS DRIVE
Start Date: 05/11/2016
Start Time: 0000

	Direction: N					Direction: S					Combined
Time	1st	2nd	3rd	4th	Total	1st	2nd	3rd	4th	Total	Total
0000	31	21	13	9	74	28	26	22	18	94	168
0100	11	8	7	6	32	19	20	9	9	57	89
0200	11	9	10	13	43	11	10	10	11	42	85
0300	11	8	4	5	28	13	7	12	15	47	75
0400	7	11	8	15	41	17	13	27	22	79	120
0500	10	14	32	35	91	25	36	52	65	178	269
0600	41	83	111	105	340	43	40	45	80	208	548
0700	125	184	154	155	618	112	93	60	59	324	942
0800	132	111	90	89	422	69	84	80	79	312	734
0900	86	51	60	72	269	63	85	94	41	283	552
1000	90	60	54	60	264	65	79	66	60	270	534
1100	62	58	61	59	240	62	70	82	81	295	535
1200	63	71	70	85	289	71	70	93	67	301	590
1300	62	70	75	81	288	79	81	67	61	288	576
1400	71	150	115	100	436	109	97	96	105	407	843
1500	85	61	70	81	297	112	95	100	104	411	708
1600	80	81	88	75	324	92	125	96	125	438	762
1700	92	81	101	92	366	110	133	146	157	546	912
1800	92	99	92	111	394	133	166	149	129	577	971
1900	91	92	102	100	385	137	141	127	132	537	922
2000	99	80	81	65	325	107	124	125	105	461	786
2100	80	81	100	90	351	111	100	93	90	394	745
2200	50	40	41	50	181	95	110	81	50	336	517
2300	40	39	42	28	149	67	67	43	56	233	382
24-Hour Totals:					6247					7118	13365

Peak Volume Information

	Direction: N		Direction: S		Combined Directions	
	Hour	Volume	Hour	Volume	Hour	Volume
A.M.	715	625	645	345	700	942
P.M.	1415	450	1745	605	1730	986
Daily	715	625	1745	605	1730	986

Generated by SPS 5.0.30P

County: 99
Station: 0084
Description: NW 68TH AVENUE 200' S OF MIAMI GARDENS DRIVE
Start Date: 05/12/2016
Start Time: 0000

	Direction: N					Direction: S					Combined
Time	1st	2nd	3rd	4th	Total	1st	2nd	3rd	4th	Total	Total
0000	18	22	26	10	76	29	22	33	32	116	192
0100	20	10	15	9	54	27	25	18	15	85	139
0200	4	11	16	8	39	20	14	15	16	65	104
0300	9	8	4	5	26	6	13	10	15	44	70
0400	4	10	3	11	28	10	17	24	26	77	105
0500	9	30	32	41	112	27	39	46	61	173	285
0600	64	101	100	120	385	85	52	43	68	248	633
0700	164	148	144	120	576	123	88	66	54	331	907
0800	105	92	82	80	359	68	92	75	80	315	674
0900	50	70	72	91	283	55	89	86	56	286	569
1000	60	50	59	60	229	79	66	66	68	279	508
1100	76	72	50	74	272	50	67	72	58	247	519
1200	67	62	65	74	268	86	78	72	72	308	576
1300	77	77	69	53	276	74	93	84	79	330	606
1400	82	160	139	90	471	99	92	91	88	370	841
1500	79	86	85	84	334	101	94	101	104	400	734
1600	89	82	114	102	387	116	128	116	131	491	878
1700	75	87	119	100	381	128	139	126	103	496	877
1800	110	92	102	79	383	120	135	140	127	522	905
1900	90	102	94	93	379	141	117	121	112	491	870
2000	105	80	80	59	324	128	111	124	85	448	772
2100	67	112	103	85	367	95	90	83	90	358	725
2200	57	54	35	32	178	84	83	65	55	287	465
2300	37	45	32	35	149	52	50	44	34	180	329
24-Hour Totals:					6336					6947	13283

Peak Volume Information

	Direction: N		Direction: S		Combined Directions	
	Hour	Volume	Hour	Volume	Hour	Volume
A.M.	645	576	645	345	645	921
P.M.	1400	471	1645	524	1645	907
Daily	645	576	1815	543	645	921

Generated by SPS 5.0.30P

County: 99
Station: 0085
Description: BOB-O-LINK DRIVE 200' N OF MIAMI GARDENS DRIVE
Start Date: 05/10/2016
Start Time: 0000

	Direction: N					Direction: S					Combined
Time	1st	2nd	3rd	4th	Total	1st	2nd	3rd	4th	Total	Total
0000	9	12	10	11	42	2	3	4	2	11	53
0100	5	1	5	7	18	2	2	3	2	9	27
0200	4	5	4	1	14	1	3	2	2	8	22
0300	2	1	0	3	6	1	2	2	2	7	13
0400	1	2	1	2	6	2	2	4	10	18	24
0500	2	1	4	6	13	5	11	17	21	54	67
0600	2	9	13	16	40	17	32	47	66	162	202
0700	17	23	25	31	96	67	55	56	64	242	338
0800	30	27	20	25	102	60	47	33	66	206	308
0900	25	27	17	24	93	47	40	48	36	171	264
1000	20	31	26	22	99	33	51	32	35	151	250
1100	17	33	21	38	109	34	22	32	40	128	237
1200	37	24	29	37	127	39	35	29	32	135	262
1300	33	33	28	36	130	35	25	42	37	139	269
1400	23	39	48	34	144	48	31	31	32	142	286
1500	45	48	41	50	184	52	30	34	46	162	346
1600	53	35	52	61	201	35	40	28	38	141	342
1700	49	56	64	57	226	29	35	30	32	126	352
1800	54	53	66	56	229	36	27	29	28	120	349
1900	52	65	65	53	235	46	43	40	35	164	399
2000	59	45	54	39	197	32	24	24	24	104	301
2100	36	51	58	38	183	33	26	26	22	107	290
2200	33	35	22	23	113	21	17	20	5	63	176
2300	25	18	15	16	74	13	13	7	12	45	119
24-Hour Totals:					2681					2615	5296

Peak Volume Information

	Direction: N		Direction: S		Combined Directions	
	Hour	Volume	Hour	Volume	Hour	Volume
A.M.	730	113	645	244	715	344
P.M.	1715	231	1500	162	1715	364
Daily	1915	242	645	244	1900	399

Generated by SPS 5.0.30P

County: 99
Station: 0085
Description: BOB-O-LINK DRIVE 200' N OF MIAMI GARDENS DRIVE
Start Date: 05/11/2016
Start Time: 0000

	Direction: N					Direction: S					Combined
Time	1st	2nd	3rd	4th	Total	1st	2nd	3rd	4th	Total	Total
0000	5	10	8	6	29	1	4	4	1	10	39
0100	5	3	5	2	15	2	8	4	5	19	34
0200	5	4	1	0	10	3	1	2	2	8	18
0300	2	3	2	1	8	0	0	1	1	2	10
0400	1	2	2	1	6	1	2	4	10	17	23
0500	4	1	1	7	13	10	15	19	18	62	75
0600	5	10	11	12	38	25	38	55	60	178	216
0700	19	10	23	14	66	73	56	65	49	243	309
0800	25	29	17	39	110	61	45	41	49	196	306
0900	29	28	17	28	102	40	42	44	39	165	267
1000	17	18	26	29	90	36	41	43	37	157	247
1100	28	21	38	24	111	36	22	31	29	118	229
1200	19	26	40	24	109	30	31	34	22	117	226
1300	33	34	29	30	126	31	40	25	39	135	261
1400	32	30	29	45	136	28	30	30	32	120	256
1500	39	45	26	37	147	30	30	34	27	121	268
1600	48	47	58	61	214	38	35	22	26	121	335
1700	52	58	39	54	203	25	30	29	39	123	326
1800	70	57	63	56	246	35	31	36	32	134	380
1900	57	65	57	51	230	38	44	36	33	151	381
2000	37	50	40	36	163	24	25	22	25	96	259
2100	50	34	45	47	176	31	19	20	27	97	273
2200	32	27	32	28	119	13	14	17	18	62	181
2300	24	24	20	11	79	16	12	11	9	48	127
24-Hour Totals:					2546					2500	5046

Peak Volume Information

	Direction: N		Direction: S		Combined Directions	
	Hour	Volume	Hour	Volume	Hour	Volume
A.M.	815	114	645	254	645	318
P.M.	1800	246	1745	141	1745	385
Daily	1800	246	645	254	1830	391

Generated by SPS 5.0.30P

County: 99
Station: 0085
Description: BOB-O-LINK DRIVE 200' N OF MIAMI GARDENS DRIVE
Start Date: 05/12/2016
Start Time: 0000

	Direction: N					Direction: S					Combined
Time	1st	2nd	3rd	4th	Total	1st	2nd	3rd	4th	Total	Total
0000	8	11	5	4	28	5	12	2	2	21	49
0100	7	5	10	3	25	2	4	10	3	19	44
0200	2	4	2	1	9	2	1	1	3	7	16
0300	1	5	0	3	9	2	4	0	2	8	17
0400	1	2	2	2	7	2	1	5	9	17	24
0500	3	0	4	3	10	9	8	23	20	60	70
0600	4	11	10	8	33	23	32	48	65	168	201
0700	19	21	15	22	77	60	57	54	58	229	306
0800	30	26	25	21	102	67	54	43	49	213	315
0900	24	36	17	25	102	43	36	45	49	173	275
1000	31	26	23	32	112	41	41	38	34	154	266
1100	21	17	22	30	90	29	34	31	30	124	214
1200	27	31	30	42	130	38	22	25	33	118	248
1300	33	26	25	39	123	33	42	36	44	155	278
1400	29	28	37	50	144	27	36	38	43	144	288
1500	44	56	45	49	194	42	31	36	31	140	334
1600	44	47	48	37	176	37	40	35	31	143	319
1700	56	61	52	58	227	30	32	30	26	118	345
1800	65	58	45	61	229	31	31	33	28	123	352
1900	52	62	40	54	208	44	41	27	35	147	355
2000	47	54	55	46	202	27	38	31	25	121	323
2100	51	36	41	39	167	17	23	18	19	77	244
2200	30	27	32	26	115	20	24	21	20	85	200
2300	21	18	13	11	63	8	8	7	6	29	92
24-Hour Totals:					2582					2593	5175

Peak Volume Information

	Direction: N		Direction: S		Combined Directions	
	Hour	Volume	Hour	Volume	Hour	Volume
A.M.	830	106	645	236	730	326
P.M.	1715	236	1415	159	1715	355
Daily	1715	236	645	236	1830	366

Generated by SPS 5.0.30P

County: 99
Station: 0086
Description: NW 67TH AVENUE 500' N OF MIAMI GARDENS DRIVE
Start Date: 05/10/2016
Start Time: 0000

	Direction: N					Direction: S					Combined
Time	1st	2nd	3rd	4th	Total	1st	2nd	3rd	4th	Total	Total
0000	81	54	46	46	227	80	64	52	35	231	458
0100	35	37	38	27	137	27	29	19	25	100	237
0200	16	25	23	14	78	21	24	17	18	80	158
0300	26	12	21	19	78	14	18	15	19	66	144
0400	21	14	25	29	89	21	23	32	28	104	193
0500	39	31	72	80	222	52	79	92	162	385	607
0600	81	113	197	198	589	228	298	316	369	1211	1800
0700	243	276	291	273	1083	343	296	394	354	1387	2470
0800	312	270	256	285	1123	356	354	389	371	1470	2593
0900	210	214	232	202	858	294	313	297	306	1210	2068
1000	179	233	191	207	810	276	266	281	272	1095	1905
1100	171	199	213	215	798	247	277	255	281	1060	1858
1200	209	238	210	240	897	274	286	285	265	1110	2007
1300	238	223	235	225	921	281	275	268	297	1121	2042
1400	231	256	266	285	1038	309	269	270	334	1182	2220
1500	291	291	246	354	1182	304	317	304	362	1287	2469
1600	318	378	333	334	1363	333	319	359	367	1378	2741
1700	353	340	376	360	1429	363	373	377	389	1502	2931
1800	368	363	365	327	1423	376	351	337	352	1416	2839
1900	324	336	304	265	1229	343	297	310	288	1238	2467
2000	299	294	268	263	1124	288	251	128	143	810	1934
2100	203	257	270	192	922	130	118	106	158	512	1434
2200	207	167	165	137	676	175	164	166	121	626	1302
2300	126	112	73	84	395	136	100	92	84	412	807
24-Hour Totals:					18691					20993	39684

Peak Volume Information

	Direction: N		Direction: S		Combined Directions	
	Hour	Volume	Hour	Volume	Hour	Volume
A.M.	715	1152	800	1470	730	2604
P.M.	1730	1467	1715	1515	1730	2960
Daily	1730	1467	1715	1515	1730	2960

Generated by SPS 5.0.30P

County: 99
Station: 0086
Description: NW 67TH AVENUE 500' N OF MIAMI GARDENS DRIVE
Start Date: 05/11/2016
Start Time: 0000

	Direction: N					Direction: S					Combined
Time	1st	2nd	3rd	4th	Total	1st	2nd	3rd	4th	Total	Total
0000	76	62	65	50	253	74	75	48	40	237	490
0100	45	25	31	26	127	50	27	21	26	124	251
0200	30	22	30	18	100	25	24	29	19	97	197
0300	13	16	26	21	76	18	19	19	18	74	150
0400	17	20	23	30	90	30	27	37	43	137	227
0500	28	47	83	79	237	47	75	108	132	362	599
0600	79	124	197	227	627	222	275	316	373	1186	1813
0700	222	285	287	285	1079	317	289	372	367	1345	2424
0800	274	289	299	245	1107	381	370	388	339	1478	2585
0900	229	185	208	189	811	303	325	274	303	1205	2016
1000	159	176	171	202	708	232	218	222	256	928	1636
1100	185	214	198	197	794	238	262	245	260	1005	1799
1200	190	259	239	246	934	242	259	256	255	1012	1946
1300	232	248	239	247	966	281	283	229	262	1055	2021
1400	262	237	283	258	1040	295	298	255	282	1130	2170
1500	279	288	273	305	1145	303	346	285	367	1301	2446
1600	331	281	342	331	1285	298	351	323	271	1243	2528
1700	355	358	354	364	1431	305	361	389	377	1432	2863
1800	364	349	361	302	1376	383	370	365	313	1431	2807
1900	362	326	293	284	1265	302	287	304	291	1184	2449
2000	302	296	281	252	1131	264	252	245	250	1011	2142
2100	249	275	258	200	982	273	247	220	179	919	1901
2200	187	175	137	137	636	174	159	140	133	606	1242
2300	135	125	108	100	468	133	131	101	93	458	926
24-Hour Totals:					18668					20960	39628

Peak Volume Information

	Direction: N		Direction: S		Combined Directions	
	Hour	Volume	Hour	Volume	Hour	Volume
A.M.	745	1147	745	1506	745	2653
P.M.	1715	1440	1730	1519	1715	2950
Daily	1715	1440	1730	1519	1715	2950

Generated by SPS 5.0.30P

County: 99
Station: 0086
Description: NW 67TH AVENUE 500' N OF MIAMI GARDENS DRIVE
Start Date: 05/12/2016
Start Time: 0000

	Direction: N					Direction: S					Combined
Time	1st	2nd	3rd	4th	Total	1st	2nd	3rd	4th	Total	Total
0000	65	79	71	62	277	68	73	46	40	227	504
0100	48	21	29	28	126	45	37	34	21	137	263
0200	19	27	20	31	97	20	29	28	21	98	195
0300	21	21	27	17	86	29	26	23	15	93	179
0400	17	19	30	29	95	25	27	44	39	135	230
0500	37	42	75	66	220	50	69	106	117	342	562
0600	97	107	180	196	580	212	275	291	352	1130	1710
0700	247	296	308	292	1143	324	301	340	349	1314	2457
0800	374	294	310	225	1203	354	373	323	290	1340	2543
0900	255	213	207	207	882	308	308	250	290	1156	2038
1000	189	187	213	192	781	266	255	243	249	1013	1794
1100	190	203	205	224	822	248	228	215	238	929	1751
1200	221	221	243	220	905	234	266	262	262	1024	1929
1300	240	230	213	261	944	258	243	271	281	1053	1997
1400	216	231	259	289	995	254	252	277	267	1050	2045
1500	321	310	291	324	1246	295	292	305	335	1227	2473
1600	291	325	330	357	1303	301	323	318	347	1289	2592
1700	399	341	363	354	1457	348	387	411	374	1520	2977
1800	382	385	390	319	1476	329	305	405	325	1364	2840
1900	327	279	305	279	1190	316	288	242	290	1136	2326
2000	274	280	266	253	1073	273	280	270	268	1091	2164
2100	226	263	283	234	1006	258	261	253	208	980	1986
2200	205	194	170	162	731	196	159	166	132	653	1384
2300	160	117	109	102	488	112	113	89	92	406	894
24-Hour Totals:					19126					20707	39833

Peak Volume Information

	Direction: N		Direction: S		Combined Directions	
	Hour	Volume	Hour	Volume	Hour	Volume
A.M.	715	1270	730	1416	730	2684
P.M.	1745	1511	1700	1520	1700	2977
Daily	1745	1511	1700	1520	1700	2977

Generated by SPS 5.0.30P

County: 99
Station: 0087
Description: NW 67TH AVENUE 200' S OF MIAMI GARDENS DRIVE
Start Date: 05/10/2016
Start Time: 0000

	Direction: N					Direction: S					Combined
Time	1st	2nd	3rd	4th	Total	1st	2nd	3rd	4th	Total	Total
0000	86	66	51	45	248	73	56	29	31	189	437
0100	41	36	34	38	149	28	30	25	28	111	260
0200	21	24	25	12	82	18	19	19	19	75	157
0300	29	12	16	23	80	12	15	18	15	60	140
0400	25	17	21	38	101	25	26	41	42	134	235
0500	43	36	69	82	230	50	78	120	168	416	646
0600	80	121	210	229	640	257	306	350	359	1272	1912
0700	347	372	332	338	1389	367	374	335	277	1353	2742
0800	350	300	309	323	1282	276	279	277	295	1127	2409
0900	212	247	230	254	943	241	274	276	306	1097	2040
1000	237	262	222	261	982	288	272	287	286	1133	2115
1100	228	253	267	285	1033	233	278	271	284	1066	2099
1200	297	334	307	331	1269	303	277	266	291	1137	2406
1300	306	323	293	263	1185	303	278	290	312	1183	2368
1400	315	380	396	361	1452	344	335	334	348	1361	2813
1500	337	366	364	369	1436	307	329	314	345	1295	2731
1600	367	416	400	373	1556	327	310	350	366	1353	2909
1700	393	403	419	381	1596	347	352	361	380	1440	3036
1800	402	432	403	353	1590	385	413	398	381	1577	3167
1900	351	363	324	289	1327	309	267	276	286	1138	2465
2000	302	321	288	266	1177	272	256	181	184	893	2070
2100	272	319	335	246	1172	185	193	173	191	742	1914
2200	230	159	176	148	713	182	147	135	115	579	1292
2300	137	109	85	90	421	108	102	75	69	354	775
24-Hour Totals:					22053					21085	43138

Peak Volume Information

	Direction: N		Direction: S		Combined Directions	
	Hour	Volume	Hour	Volume	Hour	Volume
A.M.	715	1392	645	1435	700	2742
P.M.	1730	1634	1800	1577	1745	3194
Daily	1730	1634	1800	1577	1745	3194

Generated by SPS 5.0.30P

County: 99
Station: 0087
Description: NW 67TH AVENUE 200' S OF MIAMI GARDENS DRIVE
Start Date: 05/11/2016
Start Time: 0000

	Direction: N					Direction: S					Combined
Time	1st	2nd	3rd	4th	Total	1st	2nd	3rd	4th	Total	Total
0000	72	70	66	52	260	66	65	41	27	199	459
0100	50	32	27	29	138	46	32	23	27	128	266
0200	27	21	24	23	95	23	16	30	16	85	180
0300	14	13	27	19	73	13	21	24	30	88	161
0400	29	22	23	33	107	35	26	44	50	155	262
0500	36	49	67	80	232	55	81	133	136	405	637
0600	80	118	223	242	663	243	323	338	364	1268	1931
0700	316	345	314	303	1278	377	313	326	299	1315	2593
0800	330	322	377	261	1290	309	305	286	289	1189	2479
0900	254	223	265	201	943	286	282	274	294	1136	2079
1000	206	239	208	254	907	275	278	267	287	1107	2014
1100	251	233	263	259	1006	274	304	278	296	1152	2158
1200	286	320	277	337	1220	254	278	300	277	1109	2329
1300	319	315	314	304	1252	296	251	228	289	1064	2316
1400	331	339	368	301	1339	303	330	338	307	1278	2617
1500	302	303	329	364	1298	311	300	285	334	1230	2528
1600	380	311	356	336	1383	240	301	319	261	1121	2504
1700	281	388	388	407	1464	347	311	381	355	1394	2858
1800	407	397	379	362	1545	391	405	379	319	1494	3039
1900	370	310	338	311	1329	352	305	298	261	1216	2545
2000	307	311	311	257	1186	255	265	221	255	996	2182
2100	300	346	284	196	1126	265	243	205	176	889	2015
2200	197	187	159	161	704	149	165	122	135	571	1275
2300	145	141	128	99	513	111	106	99	72	388	901
24-Hour Totals:					21351					20977	42328

Peak Volume Information

	Direction: N		Direction: S		Combined Directions	
	Hour	Volume	Hour	Volume	Hour	Volume
A.M.	745	1332	645	1380	645	2597
P.M.	1730	1599	1730	1532	1730	3131
Daily	1730	1599	1730	1532	1730	3131

Generated by SPS 5.0.30P

County: 99
Station: 0087
Description: NW 67TH AVENUE 200' S OF MIAMI GARDENS DRIVE
Start Date: 05/12/2016
Start Time: 0000

	Direction: N					Direction: S					Combined
Time	1st	2nd	3rd	4th	Total	1st	2nd	3rd	4th	Total	Total
0000	67	73	60	55	255	54	64	51	23	192	447
0100	51	35	38	35	159	42	26	36	18	122	281
0200	28	22	26	24	100	22	25	23	15	85	185
0300	25	21	25	20	91	28	29	25	22	104	195
0400	17	25	31	33	106	27	29	46	50	152	258
0500	37	46	77	80	240	54	65	129	140	388	628
0600	93	108	189	227	617	209	340	339	382	1270	1887
0700	322	346	282	306	1256	358	383	312	288	1341	2597
0800	344	339	325	270	1278	322	314	267	267	1170	2448
0900	274	239	237	262	1012	257	272	263	302	1094	2106
1000	244	197	230	260	931	297	269	249	281	1096	2027
1100	222	271	302	285	1080	276	245	258	265	1044	2124
1200	267	313	324	275	1179	249	275	287	264	1075	2254
1300	295	278	255	295	1123	293	255	278	280	1106	2229
1400	270	303	370	352	1295	280	328	329	284	1221	2516
1500	360	356	353	385	1454	293	317	283	351	1244	2698
1600	331	377	375	387	1470	286	322	334	308	1250	2720
1700	417	400	383	359	1559	297	378	376	384	1435	2994
1800	413	420	419	325	1577	383	370	439	314	1506	3083
1900	348	306	345	280	1279	336	305	254	277	1172	2451
2000	287	316	283	267	1153	232	242	268	250	992	2145
2100	276	326	313	250	1165	258	265	237	179	939	2104
2200	191	218	179	163	751	197	170	158	129	654	1405
2300	166	140	120	96	522	126	100	82	86	394	916
24-Hour Totals:					21652					21046	42698

Peak Volume Information

	Direction: N		Direction: S		Combined Directions	
	Hour	Volume	Hour	Volume	Hour	Volume
A.M.	745	1314	645	1435	645	2612
P.M.	1745	1611	1745	1576	1745	3187
Daily	1745	1611	1745	1576	1745	3187

Generated by SPS 5.0.30P

County: 99
Station: 0088
Description: MIAMI GARDENS DRIVE 1000' E OF NW 67TH AVENUE
Start Date: 05/10/2016
Start Time: 0000

	Direction: E					Direction: W					Combined
Time	1st	2nd	3rd	4th	Total	1st	2nd	3rd	4th	Total	Total
0000	56	54	40	28	178	87	59	38	32	216	394
0100	27	24	16	26	93	26	29	17	27	99	192
0200	10	14	16	26	66	15	16	19	14	64	130
0300	8	10	17	14	49	11	9	13	12	45	94
0400	12	22	17	25	76	12	14	26	16	68	144
0500	30	32	61	82	205	23	29	60	75	187	392
0600	139	164	219	314	836	96	169	198	288	751	1587
0700	391	411	404	354	1560	389	260	237	268	1154	2714
0800	365	341	344	361	1411	264	257	257	256	1034	2445
0900	313	274	285	290	1162	236	237	244	233	950	2112
1000	292	300	303	288	1183	247	245	225	249	966	2149
1100	269	284	305	300	1158	258	246	257	276	1037	2195
1200	293	324	333	346	1296	285	278	262	300	1125	2421
1300	318	312	291	321	1242	255	295	279	327	1156	2398
1400	293	362	434	347	1436	312	329	338	329	1308	2744
1500	339	337	359	408	1443	353	326	318	373	1370	2813
1600	401	410	366	362	1539	332	364	345	332	1373	2912
1700	366	355	389	343	1453	380	377	376	371	1504	2957
1800	410	395	370	351	1526	408	416	352	365	1541	3067
1900	339	359	348	283	1329	336	290	289	330	1245	2574
2000	299	294	264	221	1078	263	265	306	301	1135	2213
2100	247	280	257	245	1029	339	328	267	270	1204	2233
2200	183	181	147	116	627	166	151	142	112	571	1198
2300	117	96	76	59	348	90	113	84	77	364	712
24-Hour Totals:					22323					20467	42790

Peak Volume Information

	Direction: E		Direction: W		Combined Directions	
	Hour	Volume	Hour	Volume	Hour	Volume
A.M.	700	1560	645	1174	700	2714
P.M.	1545	1585	1730	1571	1730	3108
Daily	1545	1585	1730	1571	1730	3108

Generated by SPS 5.0.30P

County: 99
Station: 0088
Description: MIAMI GARDENS DRIVE 1000' E OF NW 67TH AVENUE
Start Date: 05/11/2016
Start Time: 0000

	Direction: E					Direction: W					Combined
Time	1st	2nd	3rd	4th	Total	1st	2nd	3rd	4th	Total	Total
0000	77	64	42	44	227	62	68	41	34	205	432
0100	34	19	24	24	101	36	17	24	23	100	201
0200	18	16	16	23	73	33	21	13	13	80	153
0300	17	8	17	11	53	11	16	16	13	56	109
0400	11	9	16	37	73	10	18	29	22	79	152
0500	26	28	64	91	209	29	43	54	91	217	426
0600	119	171	254	330	874	93	162	218	285	758	1632
0700	383	423	373	355	1534	321	332	329	347	1329	2863
0800	396	362	360	277	1395	270	366	252	281	1169	2564
0900	361	329	283	289	1262	244	203	241	226	914	2176
1000	252	278	295	299	1124	225	244	250	256	975	2099
1100	239	298	300	299	1136	241	282	284	257	1064	2200
1200	302	337	324	342	1305	311	276	306	302	1195	2500
1300	318	317	312	298	1245	275	303	299	352	1229	2474
1400	313	383	435	339	1470	353	370	310	309	1342	2812
1500	304	314	346	384	1348	273	307	300	333	1213	2561
1600	397	374	315	332	1418	305	344	327	345	1321	2739
1700	384	398	381	346	1509	363	368	394	381	1506	3015
1800	360	380	392	285	1417	416	439	433	369	1657	3074
1900	327	324	343	302	1296	368	312	281	280	1241	2537
2000	287	293	287	230	1097	238	258	266	225	987	2084
2100	238	288	237	198	961	232	251	203	200	886	1847
2200	158	132	134	131	555	164	134	123	117	538	1093
2300	108	82	72	86	348	78	89	83	66	316	664
24-Hour Totals:					22030					20377	42407

Peak Volume Information

	Direction: E		Direction: W		Combined Directions	
	Hour	Volume	Hour	Volume	Hour	Volume
A.M.	715	1547	700	1329	700	2863
P.M.	1700	1509	1745	1669	1745	3147
Daily	715	1547	1745	1669	1745	3147

Generated by SPS 5.0.30P

County: 99
Station: 0088
Description: MIAMI GARDENS DRIVE 1000' E OF NW 67TH AVENUE
Start Date: 05/12/2016
Start Time: 0000

	Direction: E					Direction: W					Combined
Time	1st	2nd	3rd	4th	Total	1st	2nd	3rd	4th	Total	Total
0000	55	56	42	39	192	58	58	54	36	206	398
0100	34	29	33	25	121	28	27	19	12	86	207
0200	16	22	8	13	59	15	16	13	12	56	115
0300	10	17	14	8	49	11	12	12	15	50	99
0400	16	21	20	35	92	13	20	22	18	73	165
0500	29	36	74	87	226	16	34	49	75	174	400
0600	112	175	223	332	842	86	176	200	284	746	1588
0700	409	455	411	412	1687	376	286	243	270	1175	2862
0800	314	369	368	322	1373	292	239	263	281	1075	2448
0900	306	292	293	272	1163	205	197	234	203	839	2002
1000	293	257	278	279	1107	231	239	218	235	923	2030
1100	278	292	260	294	1124	223	273	245	304	1045	2169
1200	311	310	318	314	1253	291	290	272	272	1125	2378
1300	294	309	286	293	1182	260	318	270	295	1143	2325
1400	292	367	423	362	1444	316	327	331	316	1290	2734
1500	369	377	382	370	1498	309	366	321	366	1362	2860
1600	389	389	374	379	1531	319	346	342	346	1353	2884
1700	364	368	388	344	1464	377	356	375	383	1491	2955
1800	372	390	399	354	1515	382	360	353	376	1471	2986
1900	321	325	348	305	1299	334	322	316	258	1230	2529
2000	306	275	288	250	1119	252	285	263	223	1023	2142
2100	293	287	251	243	1074	251	220	223	194	888	1962
2200	181	177	143	122	623	206	155	117	125	603	1226
2300	96	123	90	79	388	100	77	81	67	325	713
24-Hour Totals:					22425					19752	42177

Peak Volume Information

	Direction: E		Direction: W		Combined Directions	
	Hour	Volume	Hour	Volume	Hour	Volume
A.M.	700	1687	645	1189	700	2862
P.M.	1430	1531	1730	1500	1730	2994
Daily	700	1687	1730	1500	1730	2994

Generated by SPS 5.0.30P

County: 99
Station: 0090
Description: NW 62ND AVENUE 200' N OF MIAMI GARDENS DRIVE
Start Date: 05/10/2016
Start Time: 0000

	Direction: N					Direction: S					Combined
Time	1st	2nd	3rd	4th	Total	1st	2nd	3rd	4th	Total	Total
0000	16	12	5	1	34	8	5	3	3	19	53
0100	9	7	2	5	23	2	3	2	1	8	31
0200	3	0	4	3	10	3	4	1	2	10	20
0300	1	2	2	2	7	1	3	2	5	11	18
0400	2	3	6	6	17	3	6	7	4	20	37
0500	3	5	3	5	16	9	8	24	21	62	78
0600	9	12	23	30	74	49	71	93	116	329	403
0700	51	56	66	61	234	174	144	168	185	671	905
0800	78	72	51	69	270	154	168	112	72	506	776
0900	57	46	44	50	197	76	49	70	74	269	466
1000	47	46	36	57	186	80	55	71	50	256	442
1100	63	46	57	72	238	64	53	60	58	235	473
1200	60	64	52	66	242	62	47	66	61	236	478
1300	70	72	68	72	282	66	51	51	94	262	544
1400	74	75	94	84	327	99	76	79	75	329	656
1500	95	77	78	96	346	158	116	77	74	425	771
1600	103	103	89	89	384	60	66	74	68	268	652
1700	111	104	128	95	438	71	61	74	70	276	714
1800	111	126	90	97	424	80	83	100	82	345	769
1900	95	99	88	81	363	60	46	51	48	205	568
2000	67	87	47	60	261	46	38	42	41	167	428
2100	70	73	53	44	240	49	55	22	33	159	399
2200	46	52	31	24	153	21	27	18	14	80	233
2300	37	22	20	12	91	16	11	14	7	48	139
24-Hour Totals:					4857					5196	10053

Peak Volume Information

	Direction: N		Direction: S		Combined Directions	
	Hour	Volume	Hour	Volume	Hour	Volume
A.M.	730	277	730	675	730	952
P.M.	1730	460	1430	428	1430	778
Daily	1730	460	730	675	730	952

Generated by SPS 5.0.30P

County: 99
Station: 0090
Description: NW 62ND AVENUE 200' N OF MIAMI GARDENS DRIVE
Start Date: 05/11/2016
Start Time: 0000

	Direction: N					Direction: S					Combined
Time	1st	2nd	3rd	4th	Total	1st	2nd	3rd	4th	Total	Total
0000	13	12	14	12	51	7	5	3	4	19	70
0100	4	6	7	2	19	6	1	2	0	9	28
0200	4	2	2	4	12	3	6	1	1	11	23
0300	1	2	1	2	6	2	3	5	5	15	21
0400	2	4	3	5	14	5	2	7	7	21	35
0500	5	3	11	5	24	8	10	20	29	67	91
0600	9	10	25	44	88	38	56	94	126	314	402
0700	55	59	68	56	238	175	168	177	184	704	942
0800	77	80	61	72	290	158	159	126	69	512	802
0900	42	47	63	47	199	53	42	65	56	216	415
1000	39	58	57	66	220	77	75	55	54	261	481
1100	63	47	61	66	237	54	64	62	57	237	474
1200	58	70	75	66	269	72	50	57	65	244	513
1300	68	71	84	65	288	64	66	63	116	309	597
1400	84	86	82	88	340	177	130	78	76	461	801
1500	79	80	76	83	318	58	89	56	56	259	577
1600	92	93	80	83	348	81	58	60	73	272	620
1700	112	127	91	102	432	69	80	80	71	300	732
1800	111	108	87	77	383	87	80	64	70	301	684
1900	97	75	82	59	313	52	63	58	42	215	528
2000	66	51	64	63	244	53	44	28	25	150	394
2100	65	62	62	43	232	35	33	26	35	129	361
2200	39	38	32	27	136	21	23	20	15	79	215
2300	17	23	27	17	84	12	14	9	5	40	124
24-Hour Totals:					4785					5145	9930

Peak Volume Information

	Direction: N		Direction: S		Combined Directions	
	Hour	Volume	Hour	Volume	Hour	Volume
A.M.	800	290	700	704	730	959
P.M.	1700	432	1345	501	1345	818
Daily	1700	432	700	704	730	959

Generated by SPS 5.0.30P

County: 99
Station: 0090
Description: NW 62ND AVENUE 200' N OF MIAMI GARDENS DRIVE
Start Date: 05/12/2016
Start Time: 0000

	Direction: N					Direction: S					Combined
Time	1st	2nd	3rd	4th	Total	1st	2nd	3rd	4th	Total	Total
0000	9	10	14	8	41	3	4	3	1	11	52
0100	8	9	7	4	28	2	4	2	1	9	37
0200	1	5	2	3	11	1	6	1	2	10	21
0300	3	4	0	2	9	0	3	3	5	11	20
0400	4	1	6	2	13	5	9	3	4	21	34
0500	1	4	6	9	20	9	9	14	31	63	83
0600	14	10	24	41	89	35	85	90	112	322	411
0700	62	78	70	72	282	177	188	171	182	718	1000
0800	59	73	57	40	229	158	176	107	78	519	748
0900	65	60	48	48	221	49	67	48	55	219	440
1000	47	39	50	43	179	63	66	60	56	245	424
1100	61	39	56	61	217	56	70	45	63	234	451
1200	75	64	69	76	284	52	51	53	65	221	505
1300	68	51	68	70	257	59	75	43	96	273	530
1400	54	81	90	85	310	75	80	68	67	290	600
1500	91	103	76	88	358	182	124	61	67	434	792
1600	92	108	102	100	402	59	81	82	53	275	677
1700	95	115	103	103	416	79	78	89	68	314	730
1800	108	95	90	91	384	87	82	66	62	297	681
1900	95	95	89	81	360	69	45	67	37	218	578
2000	65	66	55	62	248	62	43	40	45	190	438
2100	64	50	49	53	216	37	40	36	27	140	356
2200	50	53	27	27	157	24	32	14	19	89	246
2300	30	26	25	23	104	9	9	14	7	39	143
24-Hour Totals:					4835					5162	9997

Peak Volume Information

	Direction: N		Direction: S		Combined Directions	
	Hour	Volume	Hour	Volume	Hour	Volume
A.M.	700	282	700	718	700	1000
P.M.	1715	429	1430	441	1430	810
Daily	1715	429	700	718	700	1000

Generated by SPS 5.0.30P

County: 99
Station: 0089
Description: NW 62ND AVENUE 200' S OF MIAMI GARDENS DRIVE
Start Date: 05/10/2016
Start Time: 0000

	Direction: N					Direction: S					Combined
Time	1st	2nd	3rd	4th	Total	1st	2nd	3rd	4th	Total	Total
0000	13	6	4	7	30	1	2	0	0	3	33
0100	3	4	3	2	12	2	0	0	2	4	16
0200	1	1	2	2	6	1	0	0	0	1	7
0300	0	1	0	2	3	0	0	1	0	1	4
0400	2	0	1	3	6	1	1	0	0	2	8
0500	2	2	0	3	7	0	1	1	0	2	9
0600	6	7	16	25	54	2	4	11	17	34	88
0700	27	24	30	43	124	21	25	29	36	111	235
0800	43	30	22	21	116	25	18	22	17	82	198
0900	20	26	25	21	92	11	2	16	9	38	130
1000	14	30	23	16	83	18	20	13	10	61	144
1100	23	27	28	18	96	12	18	14	27	71	167
1200	24	39	29	29	121	11	14	13	14	52	173
1300	28	38	25	32	123	11	9	5	18	43	166
1400	45	32	41	39	157	11	19	18	17	65	222
1500	52	36	44	43	175	33	26	13	22	94	269
1600	50	47	61	66	224	12	17	16	24	69	293
1700	59	62	52	61	234	18	17	19	20	74	308
1800	68	59	46	45	218	22	24	26	15	87	305
1900	47	43	31	36	157	19	15	11	19	64	221
2000	33	37	39	40	149	22	12	19	14	67	216
2100	45	29	38	19	131	16	14	7	7	44	175
2200	29	20	15	19	83	9	4	6	9	28	111
2300	8	17	14	6	45	1	2	5	1	9	54
24-Hour Totals:					2446					1106	3552

Peak Volume Information

	Direction: N		Direction: S		Combined Directions	
	Hour	Volume	Hour	Volume	Hour	Volume
A.M.	730	146	715	115	715	255
P.M.	1630	248	1430	94	1745	326
Daily	1630	248	715	115	1745	326

Generated by SPS 5.0.30P

County: 99
Station: 0089
Description: NW 62ND AVENUE 200' S OF MIAMI GARDENS DRIVE
Start Date: 05/11/2016
Start Time: 0000

	Direction: N					Direction: S					Combined
Time	1st	2nd	3rd	4th	Total	1st	2nd	3rd	4th	Total	Total
0000	3	12	5	7	27	0	1	1	0	2	29
0100	5	5	6	3	19	0	1	1	0	2	21
0200	5	1	0	1	7	0	0	0	0	0	7
0300	1	0	1	0	2	0	0	0	1	1	3
0400	0	2	0	2	4	0	0	0	0	0	4
0500	0	3	1	2	6	0	2	0	1	3	9
0600	5	10	19	28	62	3	14	27	13	57	119
0700	33	29	33	44	139	18	30	31	32	111	250
0800	39	26	20	23	108	33	16	27	14	90	198
0900	14	15	32	14	75	7	10	13	7	37	112
1000	18	21	14	26	79	11	12	6	14	43	122
1100	24	26	29	29	108	13	18	16	11	58	166
1200	27	25	34	37	123	19	11	14	19	63	186
1300	36	26	41	27	130	14	14	13	19	60	190
1400	50	38	34	39	161	24	24	23	16	87	248
1500	34	31	42	46	153	15	13	12	14	54	207
1600	43	51	60	47	201	23	24	18	17	82	283
1700	54	47	76	55	232	15	19	18	17	69	301
1800	63	61	46	43	213	14	14	8	10	46	259
1900	45	36	32	41	154	11	24	14	13	62	216
2000	32	40	37	29	138	22	10	12	11	55	193
2100	24	28	24	22	98	5	11	6	10	32	130
2200	19	18	23	14	74	2	2	13	5	22	96
2300	21	10	10	9	50	8	1	4	2	15	65
24-Hour Totals:					2363					1051	3414

Peak Volume Information

	Direction: N		Direction: S		Combined Directions	
	Hour	Volume	Hour	Volume	Hour	Volume
A.M.	715	145	715	126	715	271
P.M.	1730	255	1345	90	1730	318
Daily	1730	255	715	126	1730	318

Generated by SPS 5.0.30P

County: 99
Station: 0089
Description: NW 62ND AVENUE 200' S OF MIAMI GARDENS DRIVE
Start Date: 05/12/2016
Start Time: 0000

	Direction: N					Direction: S					Combined
Time	1st	2nd	3rd	4th	Total	1st	2nd	3rd	4th	Total	Total
0000	8	10	5	2	25	0	1	0	0	1	26
0100	2	4	0	2	8	0	0	1	1	2	10
0200	0	1	1	1	3	0	0	0	0	0	3
0300	1	0	1	0	2	0	0	0	1	1	3
0400	0	0	1	1	2	0	1	0	0	1	3
0500	1	1	1	6	9	0	2	0	0	2	11
0600	5	10	15	29	59	5	5	6	20	36	95
0700	40	21	39	38	138	14	23	27	38	102	240
0800	43	30	30	18	121	22	25	29	15	91	212
0900	24	20	20	19	83	15	15	13	13	56	139
1000	21	32	20	11	84	16	8	18	9	51	135
1100	26	21	27	32	106	6	14	12	11	43	149
1200	34	31	34	36	135	19	9	21	23	72	207
1300	31	32	22	24	109	17	18	17	9	61	170
1400	36	33	44	39	152	16	15	13	16	60	212
1500	48	72	38	42	200	32	24	14	16	86	286
1600	52	57	43	47	199	16	33	24	14	87	286
1700	67	58	52	56	233	18	34	18	14	84	317
1800	48	43	49	74	214	27	26	18	9	80	294
1900	40	44	32	33	149	19	9	17	15	60	209
2000	28	25	30	30	113	13	12	15	6	46	159
2100	33	23	30	25	111	15	18	7	6	46	157
2200	25	20	6	16	67	6	10	3	6	25	92
2300	18	6	16	10	50	1	7	1	3	12	62
24-Hour Totals:					2372					1105	3477

Peak Volume Information

	Direction: N		Direction: S		Combined Directions	
	Hour	Volume	Hour	Volume	Hour	Volume
A.M.	730	150	745	114	730	262
P.M.	1700	233	1715	93	1700	317
Daily	1700	233	745	114	1700	317

Generated by SPS 5.0.30P

County: 99
Station: 0091
Description: NW 57TH AVENUE 200' S OF MIAMI GARDENS DRIVE
Start Date: 05/10/2016
Start Time: 0000

	Direction: N					Direction: S					Combined
Time	1st	2nd	3rd	4th	Total	1st	2nd	3rd	4th	Total	Total
0000	114	111	95	67	387	82	55	43	47	227	614
0100	57	50	52	38	197	33	30	31	32	126	323
0200	32	31	39	20	122	20	18	21	23	82	204
0300	27	22	32	27	108	26	24	37	36	123	231
0400	35	28	31	34	128	37	58	70	80	245	373
0500	55	55	73	103	286	91	160	192	240	683	969
0600	109	143	241	268	761	325	426	518	550	1819	2580
0700	287	372	392	411	1462	479	433	445	408	1765	3227
0800	384	317	339	418	1458	431	405	431	454	1721	3179
0900	272	266	276	250	1064	426	398	419	417	1660	2724
1000	204	188	184	183	759	393	355	396	394	1538	2297
1100	216	187	216	224	843	308	376	345	318	1347	2190
1200	234	228	217	228	907	293	338	340	341	1312	2219
1300	246	225	242	253	966	334	367	308	365	1374	2340
1400	267	240	303	299	1109	393	355	354	368	1470	2579
1500	385	395	305	321	1406	308	373	358	353	1392	2798
1600	435	452	457	533	1877	300	321	344	325	1290	3167
1700	473	484	487	497	1941	322	351	290	338	1301	3242
1800	490	583	535	546	2154	352	320	310	315	1297	3451
1900	419	335	319	288	1361	279	288	281	286	1134	2495
2000	252	249	244	273	1018	264	259	278	243	1044	2062
2100	248	214	207	186	855	235	279	234	250	998	1853
2200	170	148	156	149	623	198	144	154	128	624	1247
2300	116	96	102	90	404	109	86	106	76	377	781
24-Hour Totals:					22196					24949	47145

Peak Volume Information

	Direction: N		Direction: S		Combined Directions	
	Hour	Volume	Hour	Volume	Hour	Volume
A.M.	715	1559	645	1907	715	3276
P.M.	1800	2154	1400	1470	1800	3451
Daily	1800	2154	630	1980	1800	3451

Generated by SPS 5.0.30P

County: 99
Station: 0091
Description: NW 57TH AVENUE 200' S OF MIAMI GARDENS DRIVE
Start Date: 05/11/2016
Start Time: 0000

	Direction: N					Direction: S					Combined
Time	1st	2nd	3rd	4th	Total	1st	2nd	3rd	4th	Total	Total
0000	90	80	55	50	275	56	63	40	33	192	467
0100	44	28	26	28	126	38	38	26	23	125	251
0200	30	30	22	17	99	21	22	21	21	85	184
0300	20	18	19	20	77	22	30	39	49	140	217
0400	25	18	23	32	98	30	48	60	81	219	317
0500	31	57	62	70	220	98	155	216	256	725	945
0600	126	153	217	321	817	321	534	556	547	1958	2775
0700	299	392	388	466	1545	499	513	464	497	1973	3518
0800	347	340	324	420	1431	424	398	447	491	1760	3191
0900	266	297	182	164	909	412	333	450	372	1567	2476
1000	211	165	172	190	738	383	342	347	351	1423	2161
1100	205	211	218	230	864	334	395	338	328	1395	2259
1200	240	230	255	214	939	342	328	367	325	1362	2301
1300	250	268	249	306	1073	323	356	371	387	1437	2510
1400	293	289	277	320	1179	409	384	385	353	1531	2710
1500	413	387	545	535	1880	396	339	344	302	1381	3261
1600	548	566	579	536	2229	322	343	334	295	1294	3523
1700	550	539	488	585	2162	333	349	340	337	1359	3521
1800	598	583	564	556	2301	369	343	383	334	1429	3730
1900	439	315	304	282	1340	313	294	278	280	1165	2505
2000	267	261	268	230	1026	285	251	257	193	986	2012
2100	209	249	225	178	861	216	213	180	179	788	1649
2200	189	162	135	136	622	150	162	149	138	599	1221
2300	132	108	87	96	423	119	124	96	83	422	845
24-Hour Totals:					23234					25315	48549

Peak Volume Information

	Direction: N		Direction: S		Combined Directions	
	Hour	Volume	Hour	Volume	Hour	Volume
A.M.	715	1593	645	2023	700	3518
P.M.	1745	2330	1345	1565	1745	3762
Daily	1745	2330	615	2136	1745	3762

Generated by SPS 5.0.30P

County: 99
Station: 0091
Description: NW 57TH AVENUE 200' S OF MIAMI GARDENS DRIVE
Start Date: 05/12/2016
Start Time: 0000

	Direction: N					Direction: S					Combined
Time	1st	2nd	3rd	4th	Total	1st	2nd	3rd	4th	Total	Total
0000	83	75	58	47	263	74	47	35	41	197	460
0100	38	39	29	32	138	38	29	25	30	122	260
0200	22	29	19	16	86	26	27	15	23	91	177
0300	23	17	29	23	92	26	34	41	34	135	227
0400	31	18	36	43	128	40	48	67	86	241	369
0500	30	55	67	77	229	87	159	215	272	733	962
0600	88	112	184	186	570	343	434	522	553	1852	2422
0700	190	217	260	255	922	428	440	477	452	1797	2719
0800	216	225	237	222	900	389	404	455	440	1688	2588
0900	172	199	184	167	722	400	382	408	386	1576	2298
1000	188	179	192	195	754	355	313	340	357	1365	2119
1100	193	196	207	236	832	300	337	328	355	1320	2152
1200	225	335	335	316	1211	315	325	356	316	1312	2523
1300	335	348	343	332	1358	327	341	296	367	1331	2689
1400	352	379	399	375	1505	367	339	392	341	1439	2944
1500	429	437	468	463	1797	358	341	318	311	1328	3125
1600	486	483	459	474	1902	316	288	311	325	1240	3142
1700	431	405	498	507	1841	362	341	325	364	1392	3233
1800	495	410	471	431	1807	341	369	327	328	1365	3172
1900	442	453	408	387	1690	288	315	283	268	1154	2844
2000	393	382	355	331	1461	282	254	247	243	1026	2487
2100	316	312	322	302	1252	239	242	224	201	906	2158
2200	276	224	216	231	947	177	167	163	134	641	1588
2300	171	143	149	107	570	120	100	106	89	415	985
24-Hour Totals:					22977					24666	47643

Peak Volume Information

	Direction: N		Direction: S		Combined Directions	
	Hour	Volume	Hour	Volume	Hour	Volume
A.M.	730	956	645	1898	645	2751
P.M.	1730	1910	1345	1465	1730	3309
Daily	1730	1910	630	1943	1730	3309

Generated by SPS 5.0.30P

Miami Gardens Drive & NW 87th Avenue

File Name : Miami Gardens Drive & NW 87th Avenue
Site Code : 00000000
Start Date : 5/4/2016
Page No : 1

Groups Printed- Turns

	NW 87th Avenue Southbound					NW 87th Avenue Northbound					Miami Gardens Drive Westbound					Miami Gardens Drive Eastbound					
Start Time	Left	Thru	RIght	Peds/Bike	App. Total	Left	Thru	RIght	Peds/Bike	App. Total	Left	Thru	RIght	Peds/Bike	App. Total	Left	Thru	RIght	Peds/Bike	App. Total	Int. Total
06:00 AM	0	0	0	0	0	0	0	0	0	0	3	0	0	0	3	3	0	0	0	3	6
06:15 AM	0	0	0	0	0	0	0	0	0	0	3	0	0	0	3	2	0	0	0	2	5
06:30 AM	0	0	0	0	0	0	0	0	0	0	3	0	0	0	3	9	0	0	0	9	12
06:45 AM	1	0	0	0	1	0	0	0	0	0	2	0	0	0	2	9	0	0	0	9	12
Total	1	0	0	0	1	0	0	0	0	0	11	0	0	0	11	23	0	0	0	23	35
07:00 AM	0	0	0	0	0	0	0	0	0	0	3	0	0	0	3	9	0	0	0	9	12
07:15 AM	0	0	0	0	0	0	0	0	0	0	1	0	0	0	1	4	0	0	0	4	5
07:30 AM	0	0	0	0	0	0	0	0	0	0	2	0	0	0	2	5	0	0	0	5	7
07:45 AM	0	0	0	0	0	0	0	0	0	0	2	0	0	0	2	2	0	0	0	2	4
Total	0	0	0	0	0	0	0	0	0	0	8	0	0	0	8	20	0	0	0	20	28
08:00 AM	0	0	0	0	0	0	0	0	0	0	3	0	0	0	3	0	0	0	0	0	3
08:15 AM	0	0	0	0	0	0	0	0	0	0	1	0	0	0	1	4	0	0	0	4	5
08:30 AM	1	0	0	0	1	0	0	0	0	0	4	0	0	0	4	4	0	0	0	4	9
08:45 AM	1	0	0	0	1	0	0	0	0	0	3	0	0	0	3	7	0	0	0	7	11
Total	2	0	0	0	2	0	0	0	0	0	11	0	0	0	11	15	0	0	0	15	28
*** BREAK ***																					
03:00 PM	1	0	0	0	1	0	0	0	0	0	1	0	0	0	1	6	0	0	0	6	8
03:15 PM	0	0	0	0	0	0	0	0	0	0	0	0	0	0	0	6	0	0	0	6	6
03:30 PM	0	0	0	0	0	0	0	0	0	0	1	0	0	0	1	1	0	0	0	1	2
03:45 PM	0	0	0	0	0	0	0	0	0	0	1	0	0	0	1	7	0	0	0	7	8
Total	1	0	0	0	1	0	0	0	0	0	3	0	0	0	3	20	0	0	0	20	24
04:00 PM	0	0	0	0	0	0	0	0	0	0	3	0	0	0	3	9	0	0	0	9	12
04:15 PM	1	0	0	0	1	0	0	0	0	0	3	0	0	0	3	8	0	0	0	8	12
04:30 PM	1	0	0	0	1	0	0	0	0	0	4	0	0	0	4	18	0	0	0	18	23
04:45 PM	0	0	0	0	0	0	0	0	0	0	1	0	0	0	1	5	0	0	0	5	6
Total	2	0	0	0	2	0	0	0	0	0	11	0	0	0	11	40	0	0	0	40	53
05:00 PM	2	0	0	0	2	0	0	0	0	0	7	0	0	0	7	12	0	0	0	12	21
05:15 PM	1	0	0	0	1	0	0	0	0	0	7	0	0	0	7	17	0	0	0	17	25
05:30 PM	0	0	0	0	0	0	0	0	0	0	3	0	0	0	3	11	0	0	0	11	14
05:45 PM	0	0	0	0	0	0	0	0	0	0	8	0	0	0	8	17	0	0	0	17	25
Total	3	0	0	0	3	0	0	0	0	0	25	0	0	0	25	57	0	0	0	57	85
06:00 PM	1	0	0	0	1	0	0	0	0	0	3	0	0	0	3	14	0	0	0	14	18
06:15 PM	0	0	0	0	0	0	0	0	0	0	4	0	0	0	4	5	0	0	0	5	9
06:30 PM	1	0	0	0	1	0	0	0	0	0	0	0	0	0	0	2	0	0	0	2	3
06:45 PM	1	0	0	0	1	0	0	0	0	0	5	0	0	0	5	4	0	0	0	4	10
Total	3	0	0	0	3	0	0	0	0	0	12	0	0	0	12	25	0	0	0	25	40
Grand Total	12	0	0	0	12	0	0	0	0	0	81	0	0	0	81	200	0	0	0	200	293
Apprch %	100	0	0	0		0	0	0	0		100	0	0	0		100	0	0	0		
Total %	4.1	0	0	0	4.1	0	0	0	0	0	27.6	0	0	0	27.6	68.3	0	0	0	68.3	

Miami Gardens Drive & NW 87th Avenue

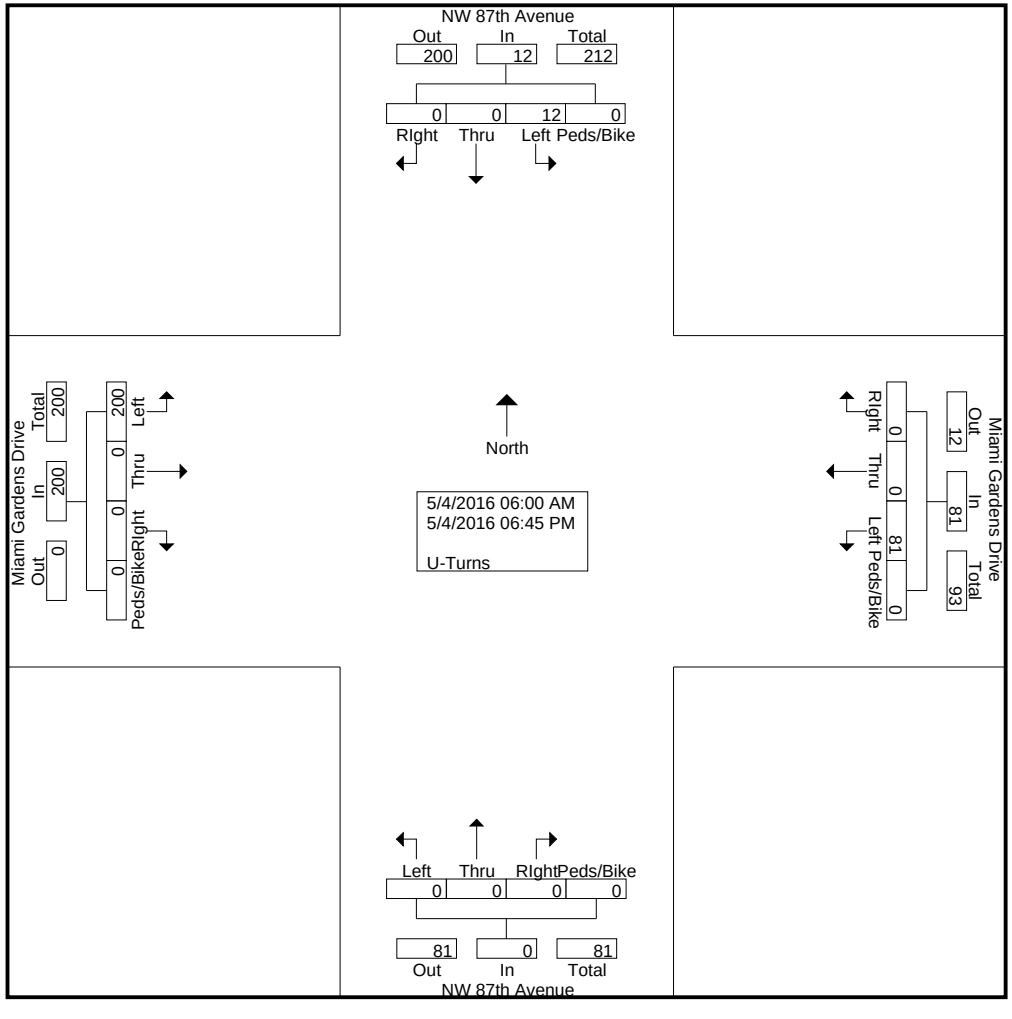

Miami Gardens Drive & NW 87th Avenue

File Name : Miami Gardens Drive & NW 87th Avenue
Site Code : 00000000
Start Date : 5/4/2016
Page No : 3

	NW 87th Avenue Southbound					NW 87th Avenue Northbound					Miami Gardens Drive Westbound					Miami Gardens Drive Eastbound					
Start Time	Left	Thru	RIght	Peds/Bike	App. Total	Left	Thru	RIght	Peds/Bike	App. Total	Left	Thru	RIght	Peds/Bike	App. Total	Left	Thru	RIght	Peds/Bike	App. Total	Int. Total
Peak Hour Analysis From 06:00 AM to 08:45 AM - Peak 1 of 1																					
Peak Hour for Entire Intersection Begins at 06:15 AM																					
06:15 AM	0	0	0	0	0	0	0	0	0	0	**3**	0	0	0	**3**	2	0	0	0	2	5
06:30 AM	0	0	0	0	0	0	0	0	0	0	3	0	0	0	3	**9**	0	0	0	**9**	**12**
06:45 AM	**1**	0	0	0	**1**	0	0	0	0	0	2	0	0	0	2	9	0	0	0	9	12
07:00 AM	0	0	0	0	0	0	0	0	0	0	3	0	0	0	3	9	0	0	0	9	12
Total Volume	1	0	0	0	1	0	0	0	0	0	11	0	0	0	11	29	0	0	0	29	41
% App. Total	100	0	0	0		0	0	0	0		100	0	0	0		100	0	0	0		
PHF	.250	.000	.000	.000	.250	.000	.000	.000	.000	.000	.917	.000	.000	.000	.917	.806	.000	.000	.000	.806	.854

Miami Gardens Drive & NW 87th Avenue

File Name : Miami Gardens Drive & NW 87th Avenue
Site Code : 00000000
Start Date : 5/4/2016
Page No : 4

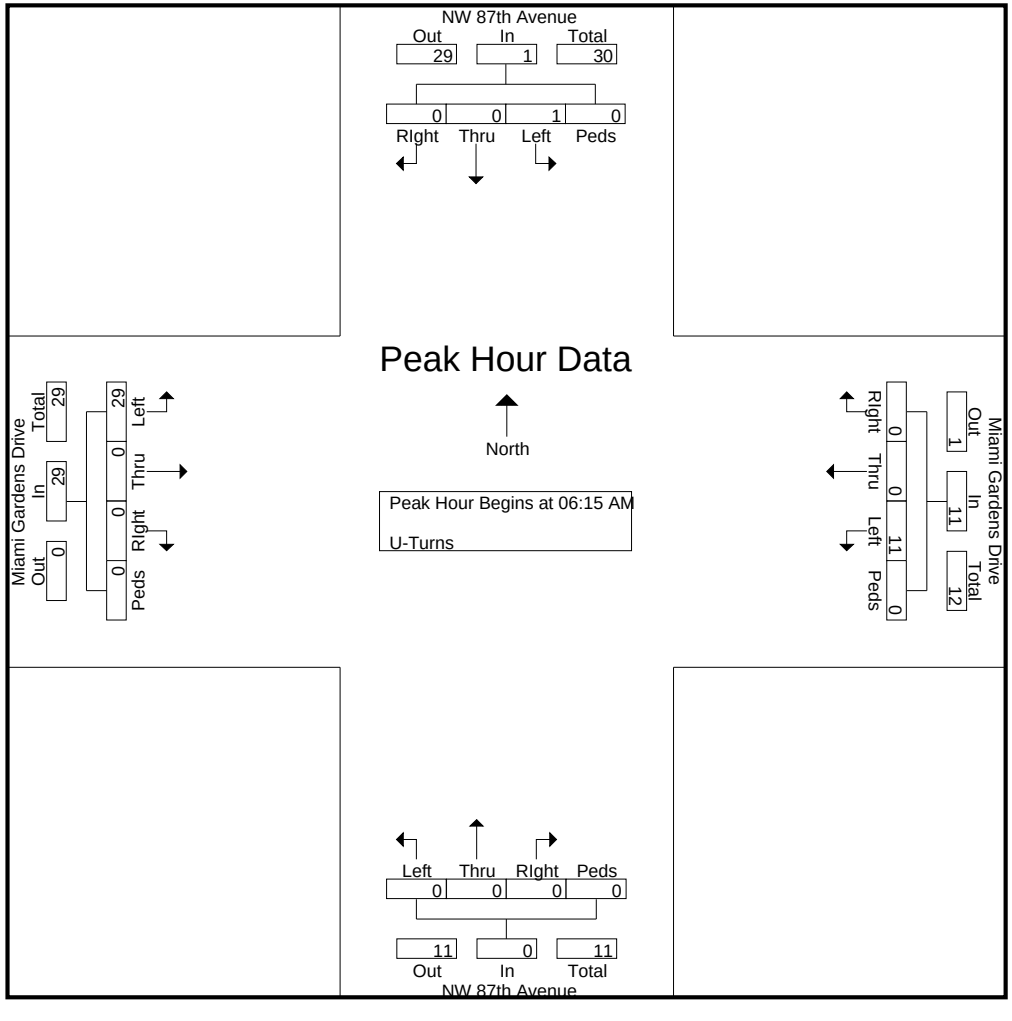

Miami Gardens Drive & NW 87th Avenue

File Name : Miami Gardens Drive & NW 87th Avenue
Site Code : 00000000
Start Date : 5/4/2016
Page No : 5

	NW 87th Avenue Southbound					NW 87th Avenue Northbound					Miami Gardens Drive Westbound					Miami Gardens Drive Eastbound					
Start Time	Left	Thru	RIght	Peds/Bike	App. Total	Left	Thru	RIght	Peds/Bike	App. Total	Left	Thru	RIght	Peds/Bike	App. Total	Left	Thru	RIght	Peds/Bike	App. Total	Int. Total
Peak Hour Analysis From 03:00 PM to 06:45 PM - Peak 1 of 1																					
Peak Hour for Entire Intersection Begins at 05:00 PM																					
05:00 PM	**2**	0	0	0	**2**	0	0	0	0	0	7	0	0	0	7	12	0	0	0	12	21
05:15 PM	1	0	0	0	1	0	0	0	0	0	7	0	0	0	7	**17**	0	0	0	**17**	**25**
05:30 PM	0	0	0	0	0	0	0	0	0	0	3	0	0	0	3	11	0	0	0	11	14
05:45 PM	0	0	0	0	0	0	0	0	0	0	**8**	0	0	0	**8**	17	0	0	0	17	25
Total Volume	3	0	0	0	3	0	0	0	0	0	25	0	0	0	25	57	0	0	0	57	85
% App. Total	100	0	0	0		0	0	0	0		100	0	0	0		100	0	0	0		
PHF	.375	.000	.000	.000	.375	.000	.000	.000	.000	.000	.781	.000	.000	.000	.781	.838	.000	.000	.000	.838	.850

Miami Gardens Drive & NW 87th Avenue

File Name : Miami Gardens Drive & NW 87th Avenue
Site Code : 00000000
Start Date : 5/4/2016
Page No : 6

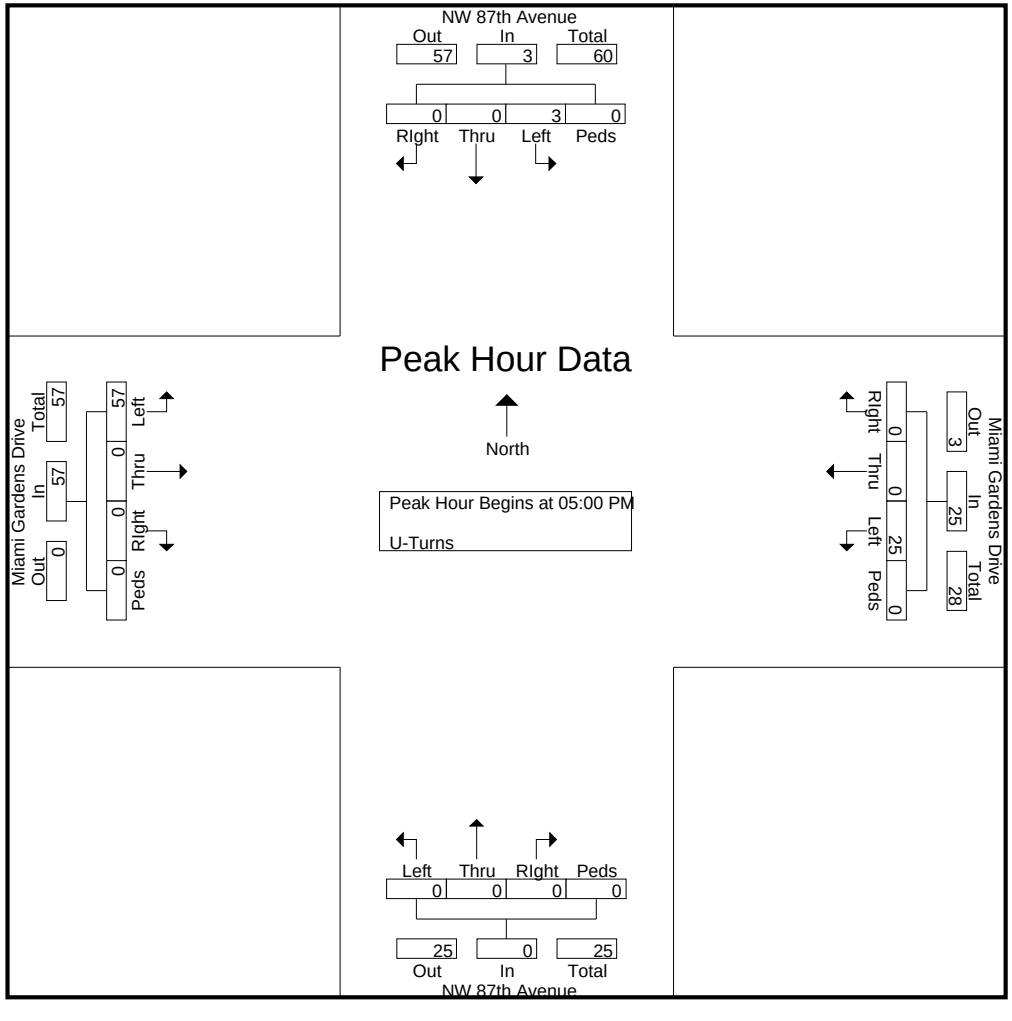

Miami Gardens Drive & NW 87th Avenue

File Name : Miami Gardens Drive & NW 87th Avenue
Site Code : 00000000
Start Date : 5/4/2016
Page No : 1

Groups Printed- Veh - Trucks - Turns

	NW 87th Avenue Southbound					NW 87th Avenue Northbound					Miami Gardens Drive Westbound					Miami Gardens Drive Eastbound					
Start Time	Left	Thru	RIght	Peds/Bike	App. Total	Left	Thru	RIght	Peds/Bike	App. Total	Left	Thru	RIght	Peds/Bike	App. Total	Left	Thru	RIght	Peds/Bike	App. Total	Int. Total
06:00 AM	7	16	71	0	94	37	5	11	0	53	15	111	7	0	133	19	40	20	0	79	359
06:15 AM	14	18	102	0	134	63	6	7	0	76	23	248	6	0	277	20	56	20	0	96	583
06:30 AM	16	41	134	2	193	83	16	18	0	117	44	381	5	0	430	25	67	30	0	122	862
06:45 AM	29	45	145	0	219	122	32	20	0	174	52	467	5	2	526	40	79	59	0	178	1097
Total	66	120	452	2	640	305	59	56	0	420	134	1207	23	2	1366	104	242	129	0	475	2901
07:00 AM	22	69	160	0	251	158	58	23	0	239	48	464	4	0	516	47	110	71	0	228	1234
07:15 AM	26	88	144	0	258	179	104	41	1	325	41	536	3	1	581	54	116	109	0	279	1443
07:30 AM	21	50	141	0	212	186	102	40	0	328	32	507	10	0	549	93	103	88	0	284	1373
07:45 AM	26	66	149	0	241	189	79	27	0	295	50	537	15	0	602	69	135	110	0	314	1452
Total	95	273	594	0	962	712	343	131	1	1187	171	2044	32	1	2248	263	464	378	0	1105	5502
08:00 AM	19	95	126	0	240	167	74	24	0	265	70	473	10	0	553	72	142	113	0	327	1385
08:15 AM	22	108	119	1	250	170	116	44	0	330	43	368	5	0	416	92	136	121	0	349	1345
08:30 AM	29	55	142	0	226	132	125	34	0	291	51	389	13	0	453	63	121	99	0	283	1253
08:45 AM	34	49	115	0	198	138	61	29	0	228	48	321	19	1	389	82	115	85	0	282	1097
Total	104	307	502	1	914	607	376	131	0	1114	212	1551	47	1	1811	309	514	418	0	1241	5080
*** BREAK ***																					
03:00 PM	25	34	26	0	85	78	68	33	0	179	30	138	19	1	188	78	201	95	0	374	826
03:15 PM	22	38	34	0	94	70	60	24	0	154	52	168	18	0	238	82	183	63	0	328	814
03:30 PM	32	45	37	0	114	83	58	49	0	190	43	201	16	0	260	92	227	78	0	397	961
03:45 PM	38	36	65	0	139	84	101	54	0	239	47	156	22	0	225	149	195	98	0	442	1045
Total	117	153	162	0	432	315	287	160	0	762	172	663	75	1	911	401	806	334	0	1541	3646
04:00 PM	29	50	58	0	137	76	82	56	0	214	43	176	17	3	239	110	231	94	0	435	1025
04:15 PM	44	50	46	0	140	81	86	38	0	205	47	181	25	0	253	146	263	115	0	524	1122
04:30 PM	40	49	40	0	129	50	75	38	0	163	30	178	27	0	235	200	257	118	0	575	1102
04:45 PM	45	44	57	0	146	80	89	38	0	207	38	149	12	1	200	199	303	121	0	623	1176
Total	158	193	201	0	552	287	332	170	0	789	158	684	81	4	927	655	1054	448	0	2157	4425
05:00 PM	51	59	44	0	154	90	76	42	0	208	52	165	27	0	244	218	308	113	0	639	1245
05:15 PM	40	50	48	0	138	112	75	46	0	233	51	181	27	1	260	251	374	136	0	761	1392
05:30 PM	48	51	55	1	155	92	95	36	0	223	48	198	28	0	274	209	371	167	1	748	1400
05:45 PM	39	55	52	0	146	82	67	46	0	195	53	153	15	0	221	234	305	147	0	686	1248
Total	178	215	199	1	593	376	313	170	0	859	204	697	97	1	999	912	1358	563	1	2834	5285
06:00 PM	48	46	52	0	146	94	67	39	0	200	55	136	30	0	221	247	308	108	0	663	1230
06:15 PM	42	64	57	0	163	81	82	40	0	203	46	202	34	2	284	199	363	132	0	694	1344
06:30 PM	55	56	66	0	177	80	90	43	0	213	52	158	32	0	242	226	344	114	0	684	1316
06:45 PM	41	40	47	0	128	68	86	41	0	195	50	175	30	0	255	172	288	97	0	557	1135
Total	186	206	222	0	614	323	325	163	0	811	203	671	126	2	1002	844	1303	451	0	2598	5025
Grand Total	904	1467	2332	4	4707	2925	2035	981	1	5942	1254	7517	481	12	9264	3488	5741	2721	1	11951	31864
Apprch %	19.2	31.2	49.5	0.1		49.2	34.2	16.5	0		13.5	81.1	5.2	0.1		29.2	48	22.8	0		
Total %	2.8	4.6	7.3	0	14.8	9.2	6.4	3.1	0	18.6	3.9	23.6	1.5	0	29.1	10.9	18	8.5	0	37.5	

Miami Gardens Drive & NW 87th Avenue

File Name : Miami Gardens Drive & NW 87th Avenue
Site Code : 00000000
Start Date : 5/4/2016
Page No : 2

Groups Printed- Veh - Trucks - Turns

	NW 87th Avenue Southbound					NW 87th Avenue Northbound					Miami Gardens Drive Westbound					Miami Gardens Drive Eastbound					
	Left	Thru	RIght	Peds/Bike	App. Total	Left	Thru	RIght	Peds/Bike	App. Total	Left	Thru	RIght	Peds/Bike	App. Total	Left	Thru	RIght	Peds/Bike	App. Total	Int. Total
Veh	884	1450	2315	3	4652	2913	2023	967	1	5904	1162	7472	448	5	9087	3275	5727	2714	0	11716	31359
% Veh	97.8	98.8	99.3	75	98.8	99.6	99.4	98.6	100	99.4	92.7	99.4	93.1	41.7	98.1	93.9	99.8	99.7	0	98	98.4
Trucks	8	17	17	1	43	12	12	14	0	38	11	45	33	7	96	13	14	7	1	35	212
% Trucks	0.9	1.2	0.7	25	0.9	0.4	0.6	1.4	0	0.6	0.9	0.6	6.9	58.3	1	0.4	0.2	0.3	100	0.3	0.7
U-Turns	12	0	0	0	12	0	0	0	0	0	81	0	0	0	81	200	0	0	0	200	293
% U-Turns	1.3	0	0	0	0.3	0	0	0	0	0	6.5	0	0	0	0.9	5.7	0	0	0	1.7	0.9

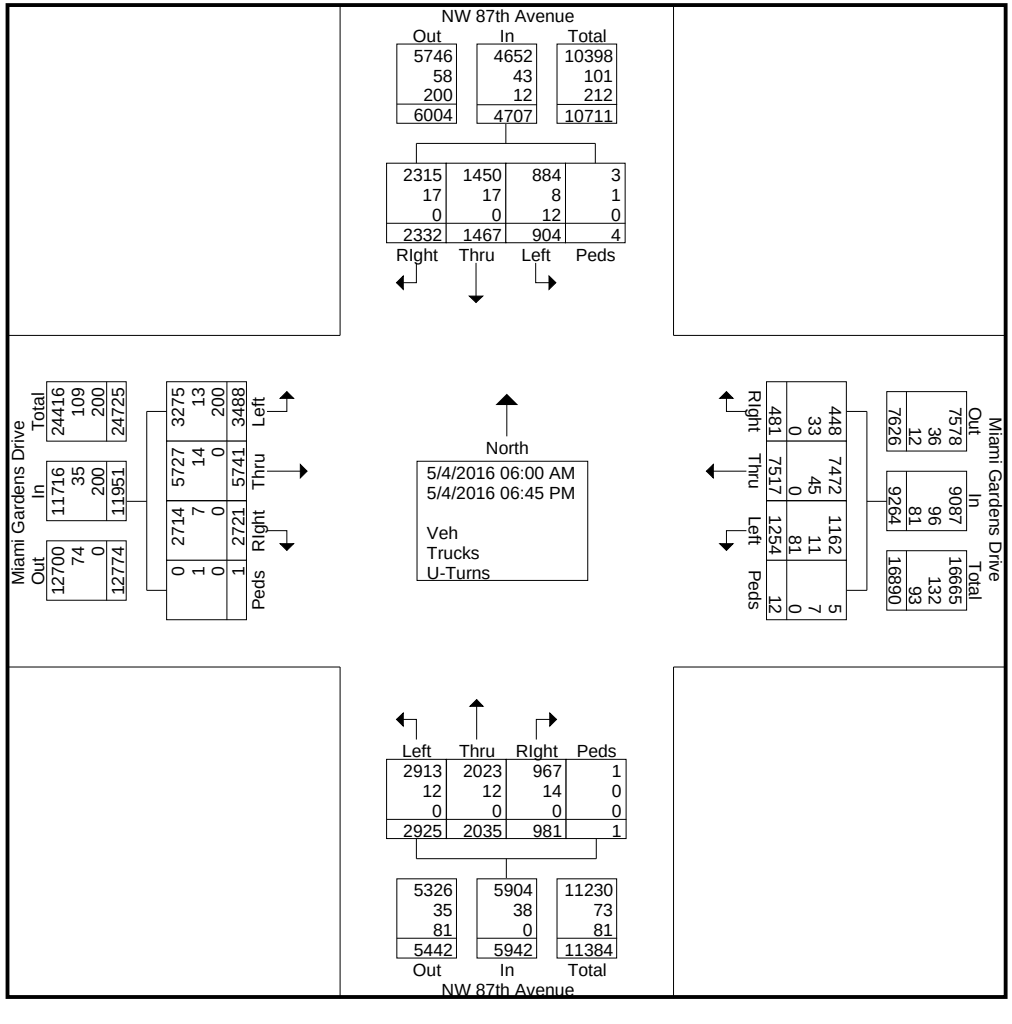

Miami Gardens Drive & NW 87th Avenue

File Name : Miami Gardens Drive & NW 87th Avenue
Site Code : 00000000
Start Date : 5/4/2016
Page No : 3

	NW 87th Avenue Southbound					NW 87th Avenue Northbound					Miami Gardens Drive Westbound					Miami Gardens Drive Eastbound					
Start Time	Left	Thru	RIght	Peds/Bike	App. Total	Left	Thru	RIght	Peds/Bike	App. Total	Left	Thru	RIght	Peds/Bike	App. Total	Left	Thru	RIght	Peds/Bike	App. Total	Int. Total
Peak Hour Analysis From 06:00 AM to 08:45 AM - Peak 1 of 1																					
Peak Hour for Entire Intersection Begins at 07:15 AM																					
07:15 AM	**26**	88	144	0	**258**	179	**104**	**41**	**1**	325	41	536	3	**1**	581	54	116	109	0	279	1443
07:30 AM	21	50	141	0	212	186	102	40	0	**328**	32	507	10	0	549	**93**	103	88	0	284	1373
07:45 AM	26	66	**149**	0	241	**189**	79	27	0	295	50	**537**	**15**	0	**602**	69	135	110	0	314	**1452**
08:00 AM	19	**95**	126	0	240	167	74	24	0	265	**70**	473	10	0	553	72	**142**	**113**	0	**327**	1385
Total Volume	92	299	560	0	951	721	359	132	1	1213	193	2053	38	1	2285	288	496	420	0	1204	5653
% App. Total	9.7	31.4	58.9	0		59.4	29.6	10.9	0.1		8.4	89.8	1.7	0		23.9	41.2	34.9	0		
PHF	.885	.787	.940	.000	.922	.954	.863	.805	.250	.925	.689	.956	.633	.250	.949	.774	.873	.929	.000	.920	.973

Miami Gardens Drive & NW 87th Avenue

File Name : Miami Gardens Drive & NW 87th Avenue
Site Code : 00000000
Start Date : 5/4/2016
Page No : 4

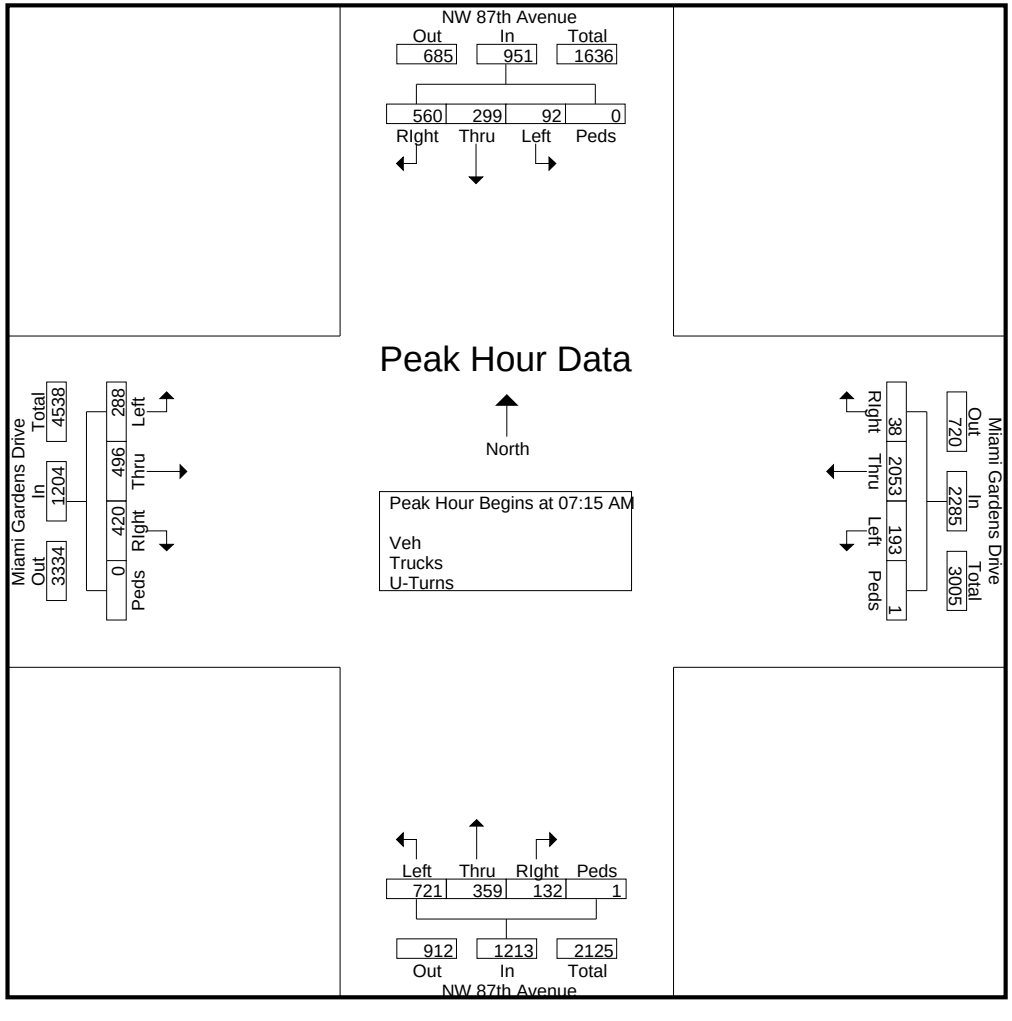

Miami Gardens Drive & NW 87th Avenue

File Name : Miami Gardens Drive & NW 87th Avenue
Site Code : 00000000
Start Date : 5/4/2016
Page No : 5

	NW 87th Avenue Southbound					NW 87th Avenue Northbound					Miami Gardens Drive Westbound					Miami Gardens Drive Eastbound					
Start Time	Left	Thru	RIght	Peds/Bike	App. Total	Left	Thru	RIght	Peds/Bike	App. Total	Left	Thru	RIght	Peds/Bike	App. Total	Left	Thru	RIght	Peds/Bike	App. Total	Int. Total
Peak Hour Analysis From 03:00 PM to 06:45 PM - Peak 1 of 1																					
Peak Hour for Entire Intersection Begins at 05:00 PM																					
05:00 PM	**51**	**59**	44	0	154	90	76	42	0	208	52	165	27	0	244	218	308	113	0	639	1245
05:15 PM	40	50	48	0	138	**112**	75	**46**	0	**233**	51	181	27	**1**	260	**251**	**374**	136	0	**761**	1392
05:30 PM	48	51	**55**	**1**	**155**	92	**95**	36	0	223	48	**198**	**28**	0	**274**	209	371	**167**	**1**	748	**1400**
05:45 PM	39	55	52	0	146	82	67	46	0	195	**53**	153	15	0	221	234	305	147	0	686	1248
Total Volume	178	215	199	1	593	376	313	170	0	859	204	697	97	1	999	912	1358	563	1	2834	5285
% App. Total	30	36.3	33.6	0.2		43.8	36.4	19.8	0		20.4	69.8	9.7	0.1		32.2	47.9	19.9	0		
PHF	.873	.911	.905	.250	.956	.839	.824	.924	.000	.922	.962	.880	.866	.250	.911	.908	.908	.843	.250	.931	.944

Miami Gardens Drive & NW 87th Avenue

File Name : Miami Gardens Drive & NW 87th Avenue
Site Code : 00000000
Start Date : 5/4/2016
Page No : 6

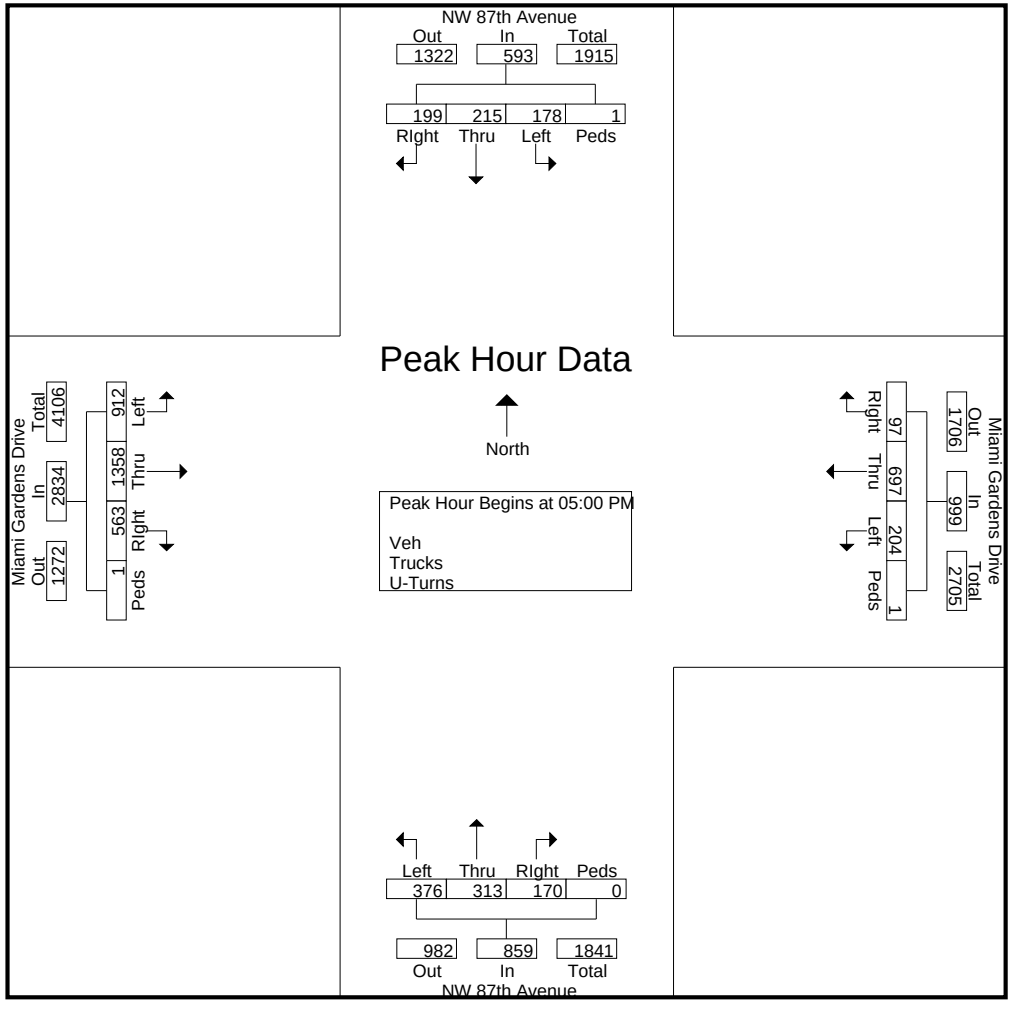

Miami Gardens Drive & Shopping Center E of NW 87th Avenue

File Name : Miami Gardens Drive & Shopping Center E of NW 87th Avenue
Site Code : 00000000
Start Date : 5/4/2016

Groups Printed- Trucks

	Shopping Center E of NW 87th Avenue Southbound					Shopping Center E of NW 87th Avenue Northbound					Miami Gardens Drive Westbound					Miami Gardens Drive Eastbound					
Start Time	Left	Thru	RIght	Bikes	App. Total	Left	Thru	RIght	Bikes	App. Total	Left	Thru	RIght	Bikes	App. Total	Left	Thru	RIght	Bikes	App. Total	Int. Total
06:00 AM	0	0	0	0	0	0	0	0	0	0	0	3	0	0	3	0	0	0	0	0	3
06:15 AM	0	0	0	0	0	0	0	0	0	0	0	6	0	0	6	0	0	0	0	0	6
06:30 AM	0	0	0	0	0	0	0	0	0	0	0	7	0	0	7	0	0	0	0	0	7
06:45 AM	0	0	0	2	2	0	0	0	0	0	0	2	0	0	2	0	0	0	0	0	4
Total	0	0	0	2	2	0	0	0	0	0	0	18	0	0	18	0	0	0	0	0	20
07:00 AM	0	0	0	0	0	0	0	0	0	0	0	2	0	0	2	0	0	0	0	0	2
07:15 AM	0	0	0	0	0	0	0	0	0	0	0	5	0	0	5	0	0	0	0	0	5
07:30 AM	0	0	1	0	1	0	0	0	0	0	0	4	0	0	4	0	0	0	0	0	5
07:45 AM	0	0	0	1	1	0	0	0	0	0	0	1	0	0	1	0	0	0	0	0	2
Total	0	0	1	1	2	0	0	0	0	0	0	12	0	0	12	0	0	0	0	0	14
08:00 AM	0	0	0	0	0	0	0	0	0	0	0	3	0	0	3	0	0	0	0	0	3
08:15 AM	0	0	0	0	0	0	0	0	0	0	0	5	0	0	5	0	0	0	0	0	5
08:30 AM	0	0	0	0	0	0	0	0	0	0	0	6	0	0	6	0	0	0	0	0	6
08:45 AM	0	0	1	0	1	0	0	0	0	0	0	6	0	0	6	0	0	0	0	0	7
Total	0	0	1	0	1	0	0	0	0	0	0	20	0	0	20	0	0	0	0	0	21
*** BREAK ***																					
03:00 PM	0	0	0	0	0	0	0	0	0	0	0	6	0	0	6	0	0	0	0	0	6
03:15 PM	0	0	0	0	0	0	0	0	0	0	0	5	0	0	5	0	0	0	0	0	5
03:30 PM	0	0	0	0	0	0	0	0	0	0	0	3	0	0	3	0	0	0	0	0	3
03:45 PM	0	0	0	0	0	0	0	0	0	0	0	3	0	0	3	0	0	0	0	0	3
Total	0	0	0	0	0	0	0	0	0	0	0	17	0	0	17	0	0	0	0	0	17
04:00 PM	0	0	0	0	0	0	0	0	0	0	0	7	0	0	7	0	0	0	0	0	7
04:15 PM	0	0	0	0	0	0	0	0	0	0	0	5	0	0	5	0	0	0	0	0	5
*** BREAK ***																					
04:45 PM	0	0	0	0	0	0	0	0	0	0	0	6	0	0	6	0	0	0	0	0	6
Total	0	0	0	0	0	0	0	0	0	0	0	18	0	0	18	0	0	0	0	0	18
05:00 PM	0	0	0	2	2	0	0	0	0	0	0	0	0	0	0	0	0	0	0	0	2
05:15 PM	0	0	0	0	0	0	0	0	0	0	0	5	0	0	5	0	0	0	0	0	5
05:30 PM	0	0	0	0	0	0	0	0	0	0	0	1	0	0	1	0	0	0	0	0	1
05:45 PM	0	0	0	0	0	0	0	0	0	0	0	3	0	0	3	0	0	0	0	0	3
Total	0	0	0	2	2	0	0	0	0	0	0	9	0	0	9	0	0	0	0	0	11
06:00 PM	0	0	0	1	1	0	0	0	0	0	0	2	0	0	2	0	0	0	0	0	3
06:15 PM	0	0	0	0	0	0	0	0	0	0	0	4	0	0	4	0	0	0	0	0	4
06:30 PM	0	0	0	1	1	0	0	0	0	0	0	2	0	0	2	0	0	0	0	0	3
06:45 PM	0	0	0	0	0	0	0	0	0	0	0	4	0	0	4	0	0	0	0	0	4
Total	0	0	0	2	2	0	0	0	0	0	0	12	0	0	12	0	0	0	0	0	14
Grand Total	0	0	2	7	9	0	0	0	0	0	0	106	0	0	106	0	0	0	0	0	115
Apprch %	0	0	22.2	77.8		0	0	0	0		0	100	0	0		0	0	0	0		
Total %	0	0	1.7	6.1	7.8	0	0	0	0	0	0	92.2	0	0	92.2	0	0	0	0	0	

Miami Gardens Drive & Shopping Center E of NW 87th Avenue

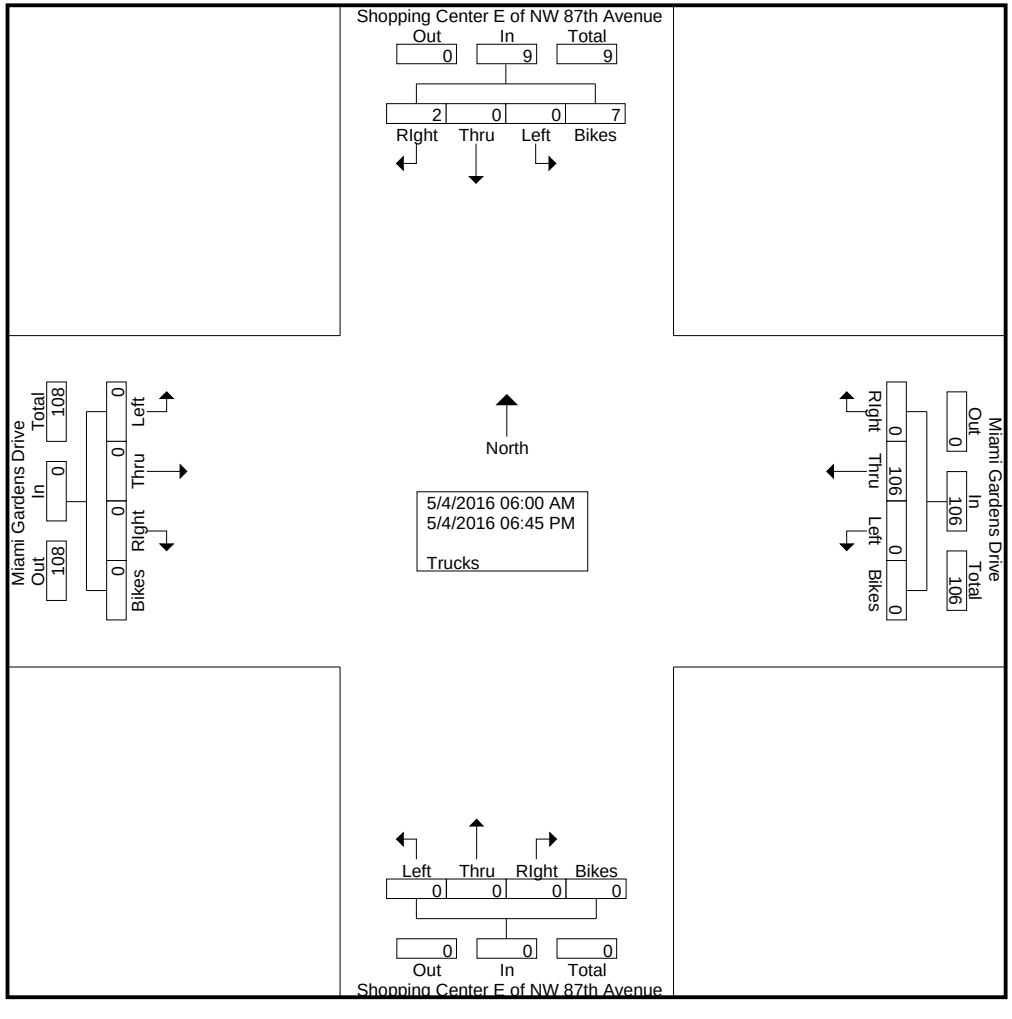

Miami Gardens Drive & Shopping Center E of NW 87th Avenue

File Name : Miami Gardens Drive & Shopping Center E of NW 87th Avenue
Site Code : 00000000
Start Date : 5/4/2016
Page No : 3

	Shopping Center E of NW 87th Avenue Southbound					Shopping Center E of NW 87th Avenue Northbound					Miami Gardens Drive Westbound					Miami Gardens Drive Eastbound					
Start Time	Left	Thru	RIght	Bikes	App. Total	Left	Thru	RIght	Bikes	App. Total	Left	Thru	RIght	Bikes	App. Total	Left	Thru	RIght	Bikes	App. Total	Int. Total
Peak Hour Analysis From 06:00 AM to 08:45 AM - Peak 1 of 1																					
Peak Hour for Entire Intersection Begins at 08:00 AM																					
08:00 AM	0	0	0	0	0	0	0	0	0	0	0	3	0	0	3	0	0	0	0	0	3
08:15 AM	0	0	0	0	0	0	0	0	0	0	0	5	0	0	5	0	0	0	0	0	5
08:30 AM	0	0	0	0	0	0	0	0	0	0	0	**6**	0	0	**6**	0	0	0	0	0	6
08:45 AM	0	0	**1**	0	**1**	0	0	0	0	0	0	6	0	0	6	0	0	0	0	0	**7**
Total Volume	0	0	1	0	1	0	0	0	0	0	0	20	0	0	20	0	0	0	0	0	21
% App. Total	0	0	100	0		0	0	0	0		0	100	0	0		0	0	0	0		
PHF	.000	.000	.250	.000	.250	.000	.000	.000	.000	.000	.000	.833	.000	.000	.833	.000	.000	.000	.000	.000	.750

Miami Gardens Drive & Shopping Center E of NW 87th Avenue

File Name : Miami Gardens Drive & Shopping Center E of NW 87th Avenue
Site Code : 00000000
Start Date : 5/4/2016
Page No : 4

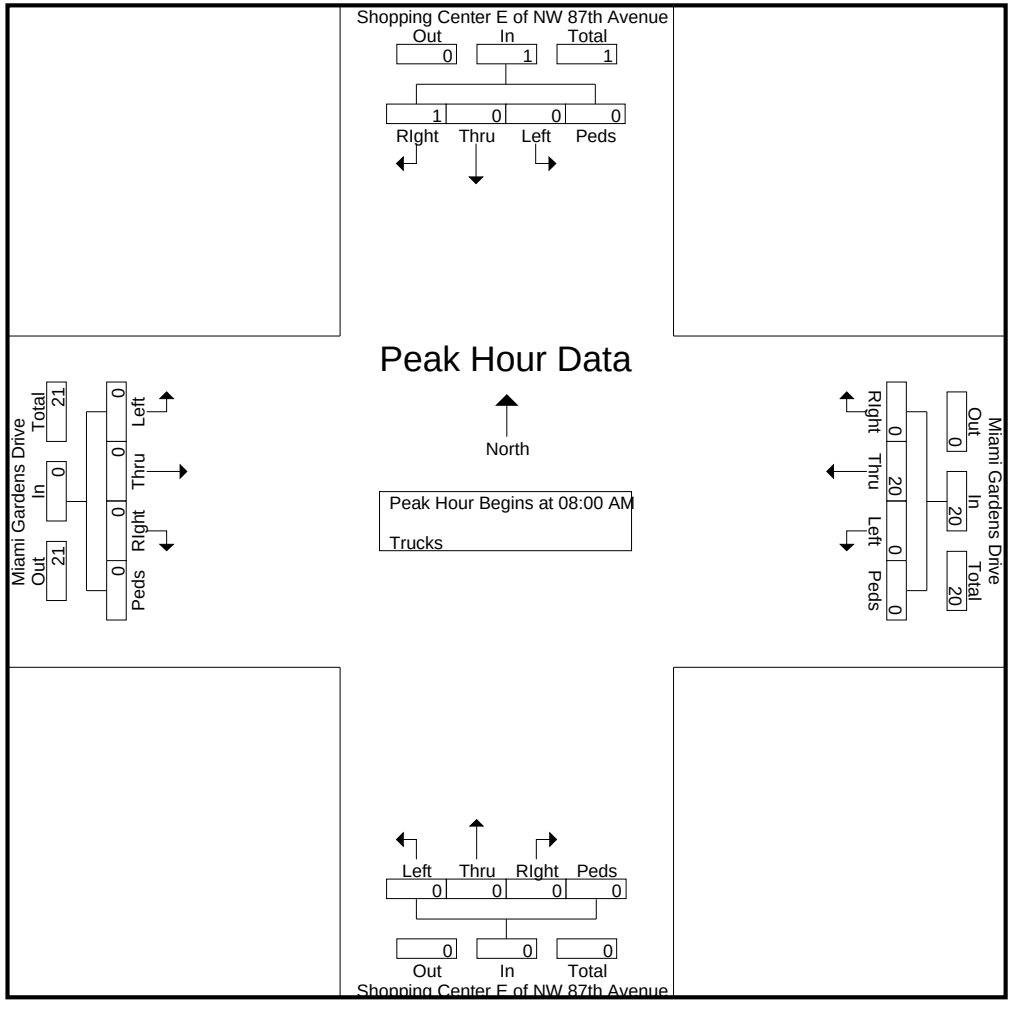

Miami Gardens Drive & Shopping Center E of NW 87th Avenue

File Name : Miami Gardens Drive & Shopping Center E of NW 87th Avenue
Site Code : 00000000
Start Date : 5/4/2016
Page No : 5

	Shopping Center E of NW 87th Avenue Southbound					Shopping Center E of NW 87th Avenue Northbound					Miami Gardens Drive Westbound					Miami Gardens Drive Eastbound					
Start Time	Left	Thru	RIght	Bikes	App. Total	Left	Thru	RIght	Bikes	App. Total	Left	Thru	RIght	Bikes	App. Total	Left	Thru	RIght	Bikes	App. Total	Int. Total
Peak Hour Analysis From 03:00 PM to 06:45 PM - Peak 1 of 1																					
Peak Hour for Entire Intersection Begins at 03:15 PM																					
03:15 PM	0	0	0	0	0	0	0	0	0	0	0	5	0	0	5	0	0	0	0	0	5
03:30 PM	0	0	0	0	0	0	0	0	0	0	0	3	0	0	3	0	0	0	0	0	3
03:45 PM	0	0	0	0	0	0	0	0	0	0	0	3	0	0	3	0	0	0	0	0	3
04:00 PM	0	0	0	0	0	0	0	0	0	0	0	**7**	0	0	**7**	0	0	0	0	0	**7**
Total Volume	0	0	0	0	0	0	0	0	0	0	0	18	0	0	18	0	0	0	0	0	18
% App. Total	0	0	0	0		0	0	0	0		0	100	0	0		0	0	0	0		
PHF	.000	.000	.000	.000	.000	.000	.000	.000	.000	.000	.000	.643	.000	.000	.643	.000	.000	.000	.000	.000	.643

Miami Gardens Drive & Shopping Center E of NW 87th Avenue

File Name : Miami Gardens Drive & Shopping Center E of NW 87th Avenue
Site Code : 00000000
Start Date : 5/4/2016
Page No : 6

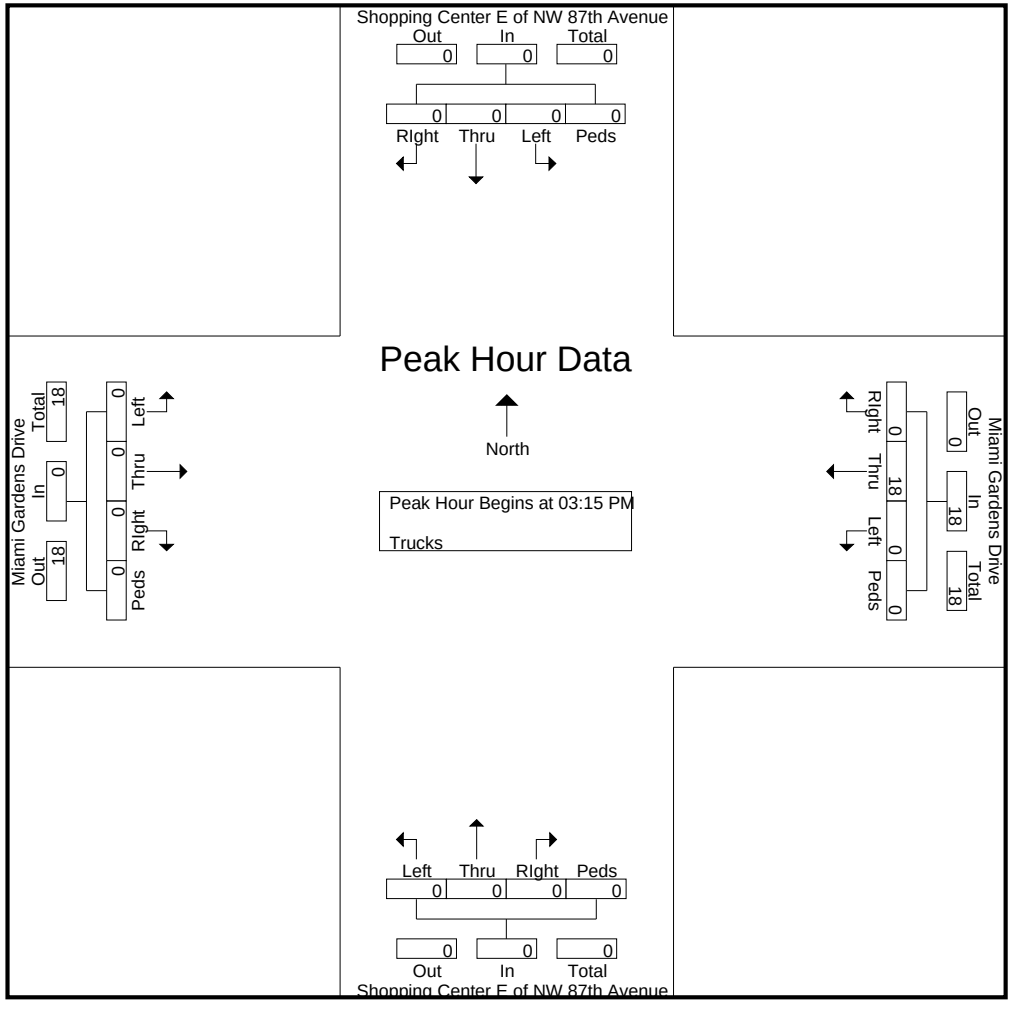

Miami Gardens Drive & Shopping Center E of NW 87th Avenue

File Name : Miami Gardens Drive & Shopping Center E of NW 87th Avenue
Site Code : 00000000
Start Date : 5/4/2016
Page No : 1

Groups Printed- Veh - Trucks - Turns

	Shopping Center E of NW 87th Avenue Southbound					Shopping Center E of NW 87th Avenue Northbound					Miami Gardens Drive Westbound					Miami Gardens Drive Eastbound					
Start Time	Left	Thru	RIght	Peds/Bike	App. Total	Left	Thru	RIght	Peds/Bike	App. Total	Left	Thru	RIght	Peds/Bike	App. Total	Left	Thru	RIght	Peds/Bike	App. Total	Int. Total
06:00 AM	0	0	8	0	8	0	0	0	0	0	0	139	2	0	141	0	0	0	0	0	149
06:15 AM	0	0	9	0	9	0	0	0	0	0	0	245	0	0	245	0	0	0	0	0	254
06:30 AM	0	0	9	1	10	0	0	0	0	0	0	391	1	0	392	0	0	0	0	0	402
06:45 AM	0	0	7	2	9	0	0	0	0	0	0	496	5	0	501	0	0	0	0	0	510
Total	0	0	33	3	36	0	0	0	0	0	0	1271	8	0	1279	0	0	0	0	0	1315
07:00 AM	0	0	22	0	22	0	0	0	0	0	0	461	5	0	466	0	0	0	0	0	488
07:15 AM	0	0	23	2	25	0	0	0	0	0	0	541	1	0	542	0	0	0	0	0	567
07:30 AM	0	0	20	0	20	0	0	0	0	0	0	510	5	0	515	0	0	0	0	0	535
07:45 AM	0	0	22	1	23	0	0	0	0	0	0	567	5	0	572	0	0	0	0	0	595
Total	0	0	87	3	90	0	0	0	0	0	0	2079	16	0	2095	0	0	0	0	0	2185
08:00 AM	0	0	27	1	28	0	0	0	0	0	0	502	8	0	510	0	0	0	0	0	538
08:15 AM	0	0	25	0	25	0	0	0	0	0	0	396	11	0	407	0	0	0	0	0	432
08:30 AM	0	0	34	0	34	0	0	0	0	0	0	412	11	0	423	0	0	0	0	0	457
08:45 AM	0	0	20	1	21	0	0	0	0	0	0	334	9	0	343	0	0	0	0	0	364
Total	0	0	106	2	108	0	0	0	0	0	0	1644	39	0	1683	0	0	0	0	0	1791
*** BREAK ***																					
03:00 PM	0	0	15	0	15	0	0	0	0	0	0	177	7	0	184	0	0	0	0	0	199
03:15 PM	0	0	6	1	7	0	0	0	0	0	0	204	15	1	220	0	0	0	0	0	227
03:30 PM	0	0	6	0	6	0	0	0	0	0	0	243	8	0	251	0	0	0	0	0	257
03:45 PM	0	0	7	0	7	0	0	0	0	0	0	203	11	0	214	0	0	0	0	0	221
Total	0	0	34	1	35	0	0	0	0	0	0	827	41	1	869	0	0	0	0	0	904
04:00 PM	0	0	17	0	17	0	0	0	0	0	0	198	12	0	210	0	0	0	0	0	227
04:15 PM	0	0	6	1	7	0	0	0	0	0	0	222	6	0	228	0	0	0	0	0	235
04:30 PM	0	0	18	0	18	0	0	0	0	0	0	202	19	0	221	0	0	0	0	0	239
04:45 PM	0	0	14	1	15	0	0	0	0	0	0	212	9	0	221	0	0	0	0	0	236
Total	0	0	55	2	57	0	0	0	0	0	0	834	46	0	880	0	0	0	0	0	937
05:00 PM	0	0	16	2	18	0	0	0	0	0	0	200	8	0	208	0	0	0	0	0	226
05:15 PM	0	0	8	1	9	0	0	0	0	0	0	237	11	0	248	0	0	0	0	0	257
05:30 PM	0	0	11	0	11	0	0	0	0	0	0	240	7	0	247	0	0	0	0	0	258
05:45 PM	0	0	8	0	8	0	0	0	0	0	0	233	5	0	238	0	0	0	0	0	246
Total	0	0	43	3	46	0	0	0	0	0	0	910	31	0	941	0	0	0	0	0	987
06:00 PM	0	0	12	1	13	0	0	0	0	0	0	226	17	0	243	0	0	0	0	0	256
06:15 PM	0	0	16	0	16	0	0	0	0	0	0	246	14	0	260	0	0	0	0	0	276
06:30 PM	0	0	12	1	13	0	0	0	0	0	0	219	16	0	235	0	0	0	0	0	248
06:45 PM	0	0	15	0	15	0	0	0	0	0	0	229	14	0	243	0	0	0	0	0	258
Total	0	0	55	2	57	0	0	0	0	0	0	920	61	0	981	0	0	0	0	0	1038
Grand Total	0	0	413	16	429	0	0	0	0	0	0	8485	242	1	8728	0	0	0	0	0	9157
Apprch %	0	0	96.3	3.7		0	0	0	0		0	97.2	2.8	0		0	0	0	0		
Total %	0	0	4.5	0.2	4.7	0	0	0	0	0	0	92.7	2.6	0	95.3	0	0	0	0	0	

Miami Gardens Drive & Shopping Center E of NW 87th Avenue

File Name : Miami Gardens Drive & Shopping Center E of NW 87th Avenue
Site Code : 00000000
Start Date : 5/4/2016

Groups Printed- Veh - Trucks - Turns

	Shopping Center E of NW 87th Avenue Southbound					Shopping Center E of NW 87th Avenue Northbound					Miami Gardens Drive Westbound					Miami Gardens Drive Eastbound					
	Left	Thru	RIght	Peds/Bike	App. Total	Left	Thru	RIght	Peds/Bike	App. Total	Left	Thru	RIght	Peds/Bike	App. Total	Left	Thru	RIght	Peds/Bike	App. Total	Int. Total
Veh	0	0	411	9	420	0	0	0	0	0	0	8379	242	1	8622	0	0	0	0	0	9042
% Veh	0	0	99.5	56.2	97.9	0	0	0	0	0	0	98.8	100	100	98.8	0	0	0	0	0	98.7
Trucks	0	0	2	7	9	0	0	0	0	0	0	106	0	0	106	0	0	0	0	0	115
% Trucks	0	0	0.5	43.8	2.1	0	0	0	0	0	0	1.2	0	0	1.2	0	0	0	0	0	1.3
U-Turns	0	0	0	0	0	0	0	0	0	0	0	0	0	0	0	0	0	0	0	0	0
% U-Turns	0	0	0	0	0	0	0	0	0	0	0	0	0	0	0	0	0	0	0	0	0

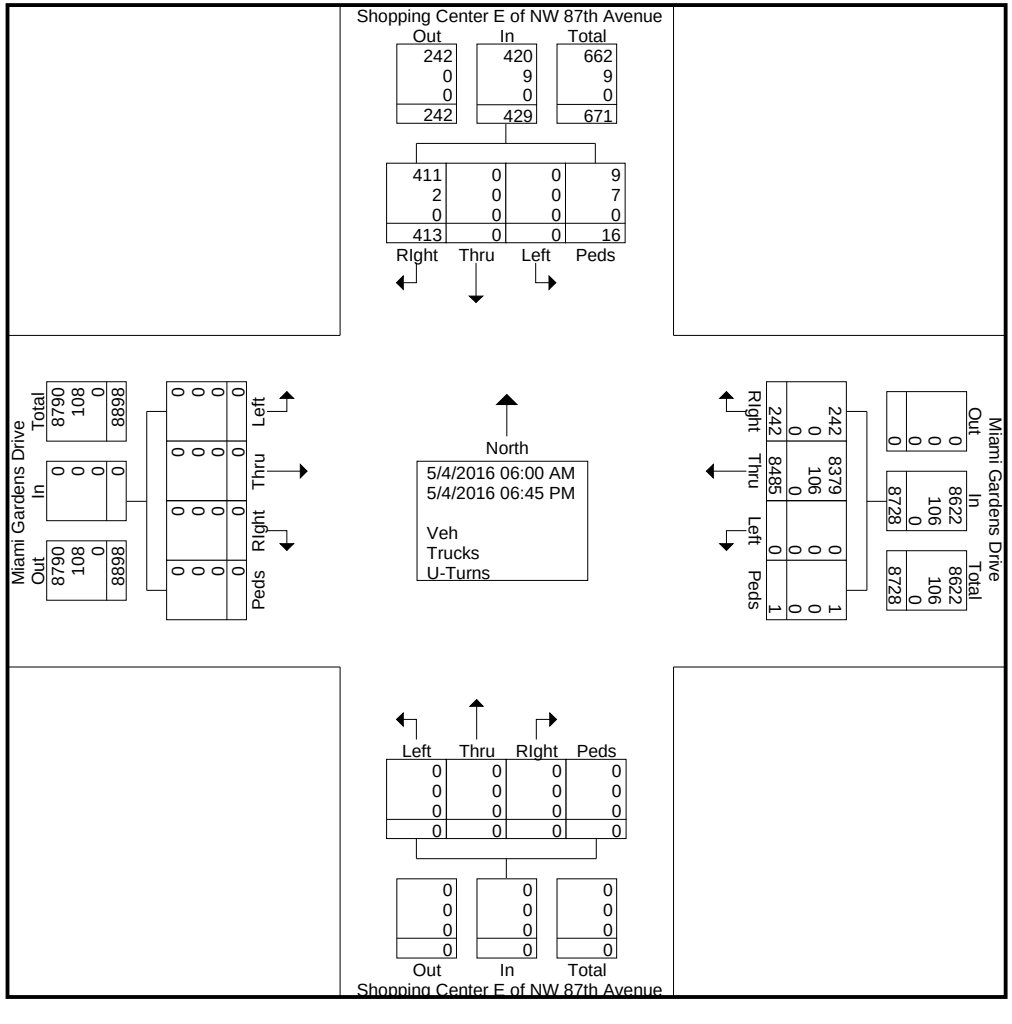

Miami Gardens Drive & Shopping Center E of NW 87th Avenue

File Name : Miami Gardens Drive & Shopping Center E of NW 87th Avenue
Site Code : 00000000
Start Date : 5/4/2016
Page No : 3

	Shopping Center E of NW 87th Avenue Southbound					Shopping Center E of NW 87th Avenue Northbound					Miami Gardens Drive Westbound					Miami Gardens Drive Eastbound					
Start Time	Left	Thru	RIght	Peds/Bike	App. Total	Left	Thru	RIght	Peds/Bike	App. Total	Left	Thru	RIght	Peds/Bike	App. Total	Left	Thru	RIght	Peds/Bike	App. Total	Int. Total
Peak Hour Analysis From 06:00 AM to 08:45 AM - Peak 1 of 1																					
Peak Hour for Entire Intersection Begins at 07:15 AM																					
07:15 AM	0	0	23	**2**	25	0	0	0	0	0	0	541	1	0	542	0	0	0	0	0	567
07:30 AM	0	0	20	0	20	0	0	0	0	0	0	510	5	0	515	0	0	0	0	0	535
07:45 AM	0	0	22	1	23	0	0	0	0	0	0	**567**	5	0	**572**	0	0	0	0	0	**595**
08:00 AM	0	0	**27**	1	**28**	0	0	0	0	0	0	502	**8**	0	510	0	0	0	0	0	538
Total Volume	0	0	92	4	96	0	0	0	0	0	0	2120	19	0	2139	0	0	0	0	0	2235
% App. Total	0	0	95.8	4.2		0	0	0	0		0	99.1	0.9	0		0	0	0	0		
PHF	.000	.000	.852	.500	.857	.000	.000	.000	.000	.000	.000	.935	.594	.000	.935	.000	.000	.000	.000	.000	.939

Miami Gardens Drive & Shopping Center E of NW 87th Avenue

File Name : Miami Gardens Drive & Shopping Center E of NW 87th Avenue
Site Code : 00000000
Start Date : 5/4/2016
Page No : 4

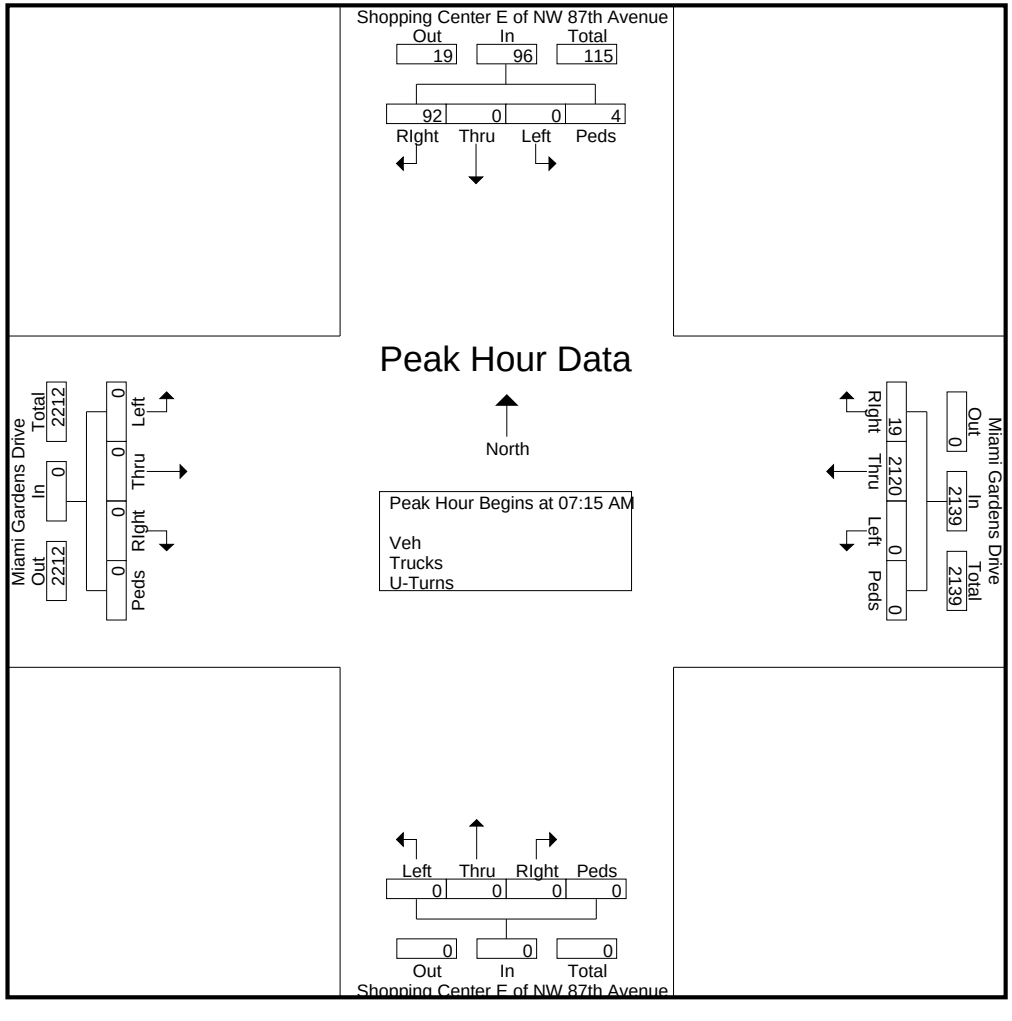

Miami Gardens Drive & Shopping Center E of NW 87th Avenue

File Name : Miami Gardens Drive & Shopping Center E of NW 87th Avenue
Site Code : 00000000
Start Date : 5/4/2016
Page No : 5

	Shopping Center E of NW 87th Avenue Southbound					Shopping Center E of NW 87th Avenue Northbound					Miami Gardens Drive Westbound					Miami Gardens Drive Eastbound					
Start Time	Left	Thru	RIght	Peds/Bike	App. Total	Left	Thru	RIght	Peds/Bike	App. Total	Left	Thru	RIght	Peds/Bike	App. Total	Left	Thru	RIght	Peds/Bike	App. Total	Int. Total
Peak Hour Analysis From 03:00 PM to 06:45 PM - Peak 1 of 1																					
Peak Hour for Entire Intersection Begins at 06:00 PM																					
06:00 PM	0	0	12	**1**	13	0	0	0	0	0	0	226	**17**	0	243	0	0	0	0	0	256
06:15 PM	0	0	**16**	0	**16**	0	0	0	0	0	0	**246**	14	0	**260**	0	0	0	0	0	**276**
06:30 PM	0	0	12	1	13	0	0	0	0	0	0	219	16	0	235	0	0	0	0	0	248
06:45 PM	0	0	15	0	15	0	0	0	0	0	0	229	14	0	243	0	0	0	0	0	258
Total Volume	0	0	55	2	57	0	0	0	0	0	0	920	61	0	981	0	0	0	0	0	1038
% App. Total	0	0	96.5	3.5		0	0	0	0		0	93.8	6.2	0		0	0	0	0		
PHF	.000	.000	.859	.500	.891	.000	.000	.000	.000	.000	.000	.935	.897	.000	.943	.000	.000	.000	.000	.000	.940

Miami Gardens Drive & Shopping Center E of NW 87th Avenue

File Name : Miami Gardens Drive & Shopping Center E of NW 87th Avenue
Site Code : 00000000
Start Date : 5/4/2016
Page No : 6

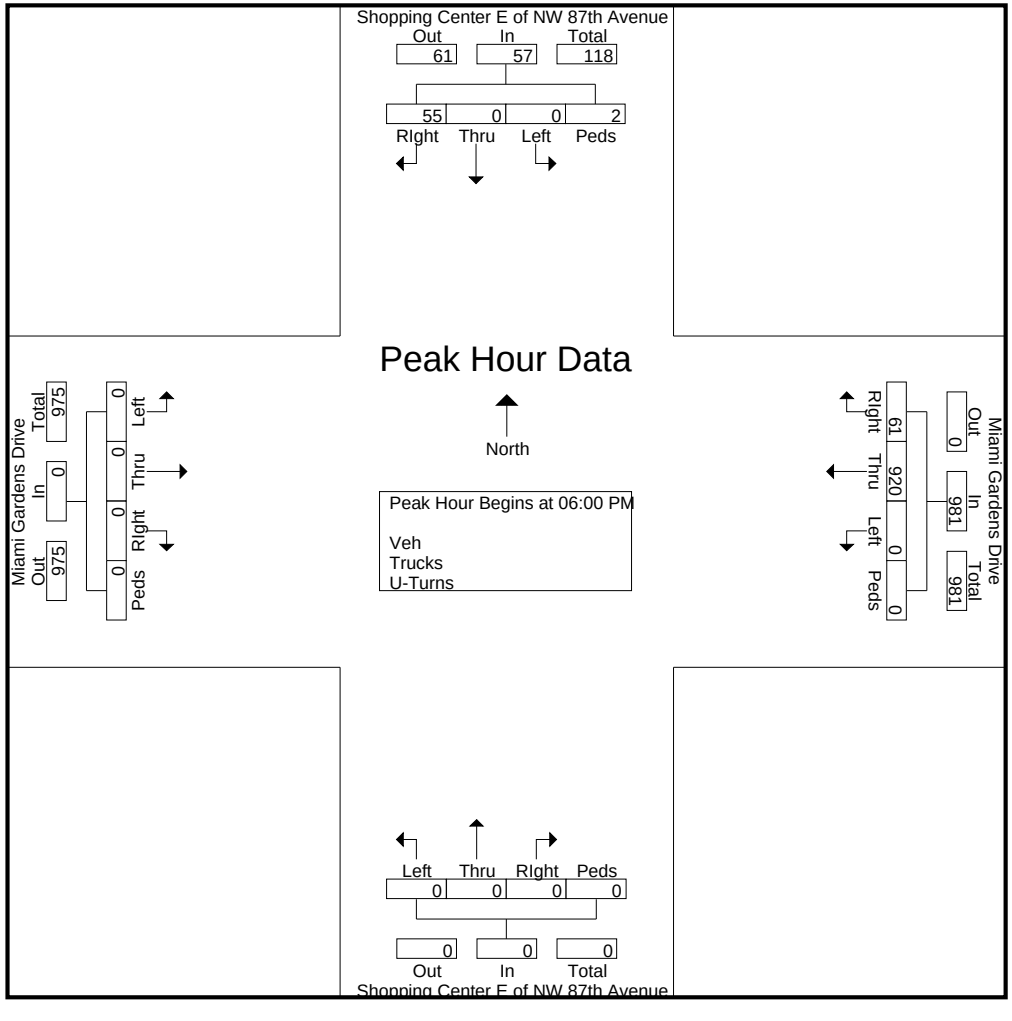

Miami Gardens Drive & NW 84th Court

File Name : Miami Gardens Drive & NW 84th Ct
Site Code : 00000000
Start Date : 5/4/2016
Page No : 1

Groups Printed- Trucks

	NW 84th Ct Southbound					NW 84th Ct Northbound					Miami Gardens Drive Westbound					Miami Gardens Drive Eastbound					
Start Time	Left	Thru	RIght	Bikes	App. Total	Left	Thru	RIght	Bikes	App. Total	Left	Thru	RIght	Bikes	App. Total	Left	Thru	RIght	Bikes	App. Total	Int. Total
06:00 AM	0	0	0	0	0	0	0	1	0	1	0	4	0	0	4	0	3	0	0	3	8
06:15 AM	0	0	0	0	0	0	0	0	0	0	0	6	0	0	6	0	3	0	0	3	9
06:30 AM	0	0	0	0	0	0	0	1	0	1	0	3	0	0	3	0	7	0	0	7	11
06:45 AM	0	0	0	0	0	0	0	0	0	0	0	4	0	0	4	0	9	0	0	9	13
Total	0	0	0	0	0	0	0	2	0	2	0	17	0	0	17	0	22	0	0	22	41
07:00 AM	0	0	0	0	0	0	0	1	0	1	0	2	0	0	2	0	0	0	0	0	3
07:15 AM	0	0	0	0	0	0	0	0	0	0	0	4	0	0	4	0	1	0	0	1	5
07:30 AM	0	0	0	0	0	0	0	0	0	0	0	5	0	0	5	0	2	0	0	2	7
07:45 AM	0	0	0	0	0	1	0	1	0	2	0	2	0	0	2	0	0	0	0	0	4
Total	0	0	0	0	0	1	0	2	0	3	0	13	0	0	13	0	3	0	0	3	19
08:00 AM	0	0	0	0	0	0	0	0	0	0	0	4	0	0	4	0	2	0	0	2	6
08:15 AM	0	0	0	0	0	0	0	1	0	1	0	5	0	0	5	0	1	0	0	1	7
08:30 AM	0	0	0	0	0	0	0	0	0	0	0	6	0	0	6	0	4	0	0	4	10
08:45 AM	0	0	0	0	0	1	0	0	0	1	0	6	0	0	6	0	4	0	0	4	11
Total	0	0	0	0	0	1	0	1	0	2	0	21	0	0	21	0	11	0	0	11	34
*** BREAK ***																					
03:00 PM	0	0	0	0	0	0	0	0	0	0	0	6	0	0	6	0	0	0	0	0	6
03:15 PM	0	0	0	0	0	0	0	0	0	0	0	8	0	0	8	0	2	0	0	2	10
03:30 PM	0	0	0	0	0	0	0	0	0	0	0	9	0	0	9	0	1	0	0	1	10
03:45 PM	0	0	0	0	0	0	0	1	0	1	0	5	0	0	5	0	2	0	0	2	8
Total	0	0	0	0	0	0	0	1	0	1	0	28	0	0	28	0	5	0	0	5	34
04:00 PM	0	0	0	0	0	0	0	3	0	3	0	7	0	0	7	0	5	0	0	5	15
04:15 PM	0	0	0	0	0	0	0	0	0	0	0	2	0	0	2	0	3	0	0	3	5
04:30 PM	0	0	0	0	0	0	0	0	0	0	0	6	0	0	6	0	1	0	0	1	7
04:45 PM	0	0	0	0	0	0	0	0	0	0	0	8	0	0	8	0	7	0	0	7	15
Total	0	0	0	0	0	0	0	3	0	3	0	23	0	0	23	0	16	0	0	16	42
05:00 PM	0	0	0	0	0	0	0	0	0	0	0	2	0	0	2	0	2	0	0	2	4
05:15 PM	0	0	0	0	0	0	0	0	0	0	0	3	0	0	3	0	3	0	0	3	6
05:30 PM	0	0	0	0	0	0	0	0	0	0	0	2	0	0	2	0	2	0	0	2	4
05:45 PM	0	0	0	0	0	0	0	0	0	0	0	3	0	0	3	0	2	0	0	2	5
Total	0	0	0	0	0	0	0	0	0	0	0	10	0	0	10	0	9	0	0	9	19
06:00 PM	0	0	0	0	0	0	0	0	0	0	0	1	0	0	1	0	2	0	0	2	3
06:15 PM	0	0	0	0	0	0	0	0	0	0	0	2	0	0	2	0	1	0	0	1	3
06:30 PM	0	0	0	0	0	0	0	0	2	2	0	2	0	0	2	0	0	0	0	0	4
06:45 PM	0	0	0	0	0	0	0	0	1	1	0	4	0	0	4	0	0	0	0	0	5
Total	0	0	0	0	0	0	0	0	3	3	0	9	0	0	9	0	3	0	0	3	15
Grand Total	0	0	0	0	0	2	0	9	3	14	0	121	0	0	121	0	69	0	0	69	204
Apprch %	0	0	0	0		14.3	0	64.3	21.4		0	100	0	0		0	100	0	0		
Total %	0	0	0	0	0	1	0	4.4	1.5	6.9	0	59.3	0	0	59.3	0	33.8	0	0	33.8	

Miami Gardens Drive & NW 84th Court

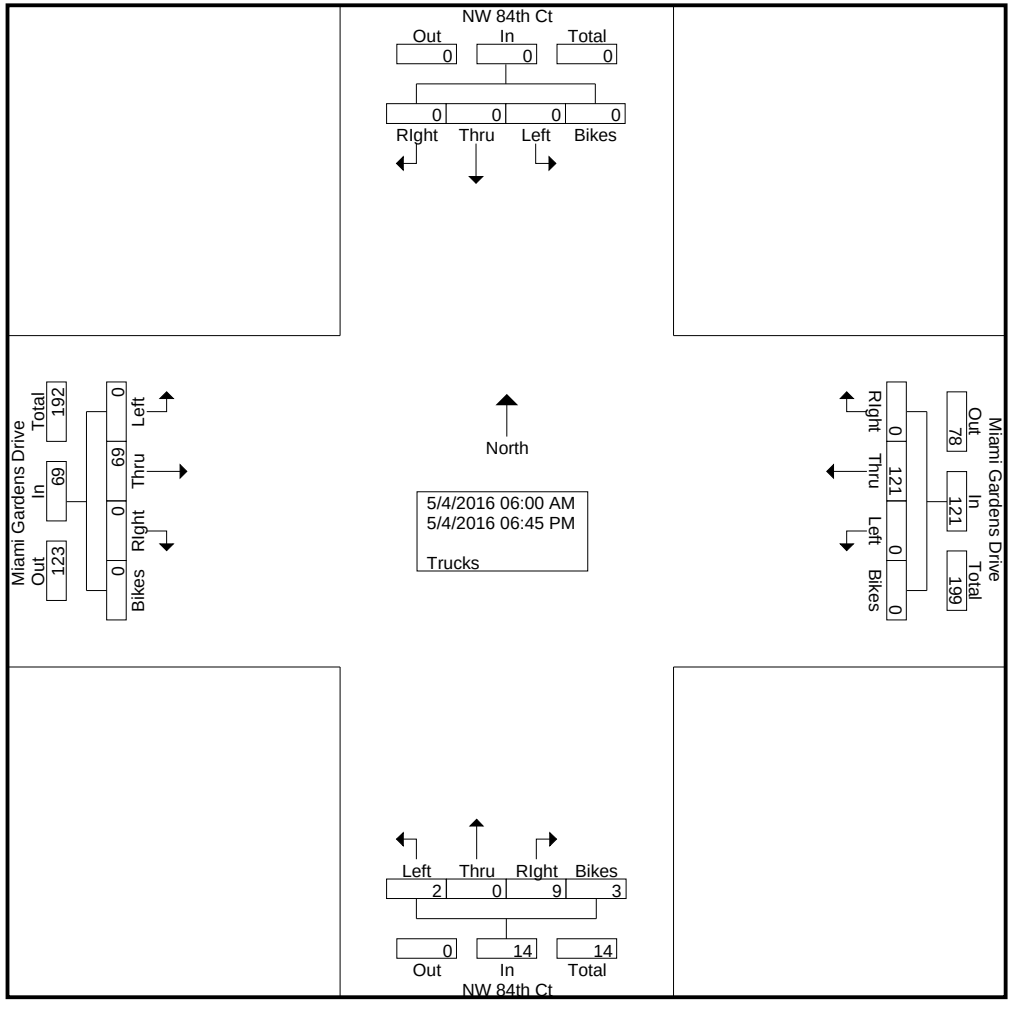

Miami Gardens Drive & NW 84th Court

File Name : Miami Gardens Drive & NW 84th Ct
Site Code : 00000000
Start Date : 5/4/2016
Page No : 3

	NW 84th Ct Southbound					NW 84th Ct Northbound					Miami Gardens Drive Westbound					Miami Gardens Drive Eastbound					
Start Time	Left	Thru	RIght	Bikes	App. Total	Left	Thru	RIght	Bikes	App. Total	Left	Thru	RIght	Bikes	App. Total	Left	Thru	RIght	Bikes	App. Total	Int. Total
Peak Hour Analysis From 06:00 AM to 08:45 AM - Peak 1 of 1																					
Peak Hour for Entire Intersection Begins at 06:00 AM																					
06:00 AM	0	0	0	0	0	0	0	**1**	0	**1**	0	4	0	0	4	0	3	0	0	3	8
06:15 AM	0	0	0	0	0	0	0	0	0	0	0	**6**	0	0	**6**	0	3	0	0	3	9
06:30 AM	0	0	0	0	0	0	0	1	0	1	0	3	0	0	3	0	7	0	0	7	11
06:45 AM	0	0	0	0	0	0	0	0	0	0	0	4	0	0	4	0	**9**	0	0	**9**	**13**
Total Volume	0	0	0	0	0	0	0	2	0	2	0	17	0	0	17	0	22	0	0	22	41
% App. Total	0	0	0	0		0	0	100	0		0	100	0	0		0	100	0	0		
PHF	.000	.000	.000	.000	.000	.000	.000	.500	.000	.500	.000	.708	.000	.000	.708	.000	.611	.000	.000	.611	.788

Miami Gardens Drive & NW 84th Court

File Name : Miami Gardens Drive & NW 84th Ct
Site Code : 00000000
Start Date : 5/4/2016
Page No : 4

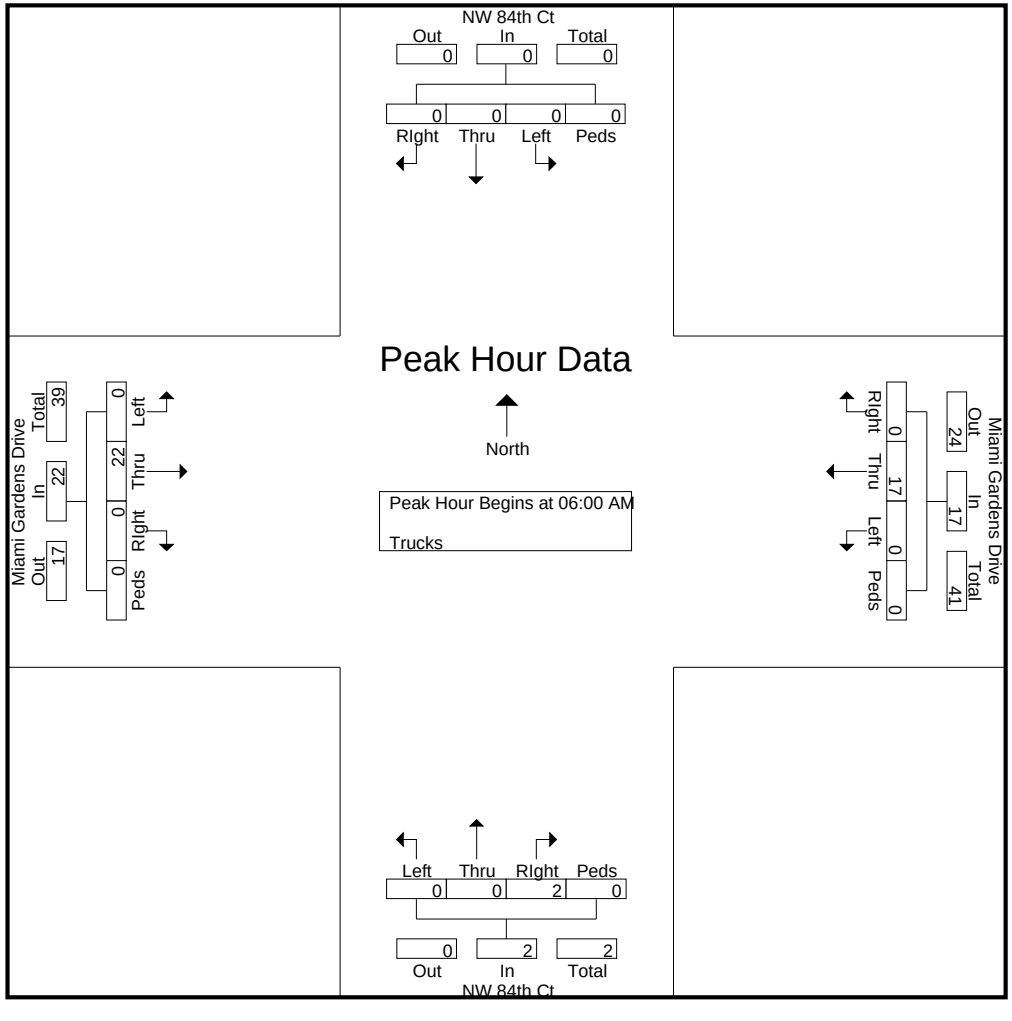

Miami Gardens Drive & NW 84th Court

File Name : Miami Gardens Drive & NW 84th Ct
Site Code : 00000000
Start Date : 5/4/2016
Page No : 5

	NW 84th Ct Southbound					NW 84th Ct Northbound					Miami Gardens Drive Westbound					Miami Gardens Drive Eastbound					
Start Time	Left	Thru	RIght	Bikes	App. Total	Left	Thru	RIght	Bikes	App. Total	Left	Thru	RIght	Bikes	App. Total	Left	Thru	RIght	Bikes	App. Total	Int. Total
Peak Hour Analysis From 03:00 PM to 06:45 PM - Peak 1 of 1																					
Peak Hour for Entire Intersection Begins at 03:15 PM																					
03:15 PM	0	0	0	0	0	0	0	0	0	0	0	8	0	0	8	0	2	0	0	2	10
03:30 PM	0	0	0	0	0	0	0	0	0	0	0	**9**	0	0	**9**	0	1	0	0	1	10
03:45 PM	0	0	0	0	0	0	0	1	0	1	0	5	0	0	5	0	2	0	0	2	8
04:00 PM	0	0	0	0	0	0	0	**3**	0	**3**	0	7	0	0	7	0	**5**	0	0	**5**	**15**
Total Volume	0	0	0	0	0	0	0	4	0	4	0	29	0	0	29	0	10	0	0	10	43
% App. Total	0	0	0	0		0	0	100	0		0	100	0	0		0	100	0	0		
PHF	.000	.000	.000	.000	.000	.000	.000	.333	.000	.333	.000	.806	.000	.000	.806	.000	.500	.000	.000	.500	.717

Miami Gardens Drive & NW 84th Court

File Name : Miami Gardens Drive & NW 84th Ct
Site Code : 00000000
Start Date : 5/4/2016
Page No : 6

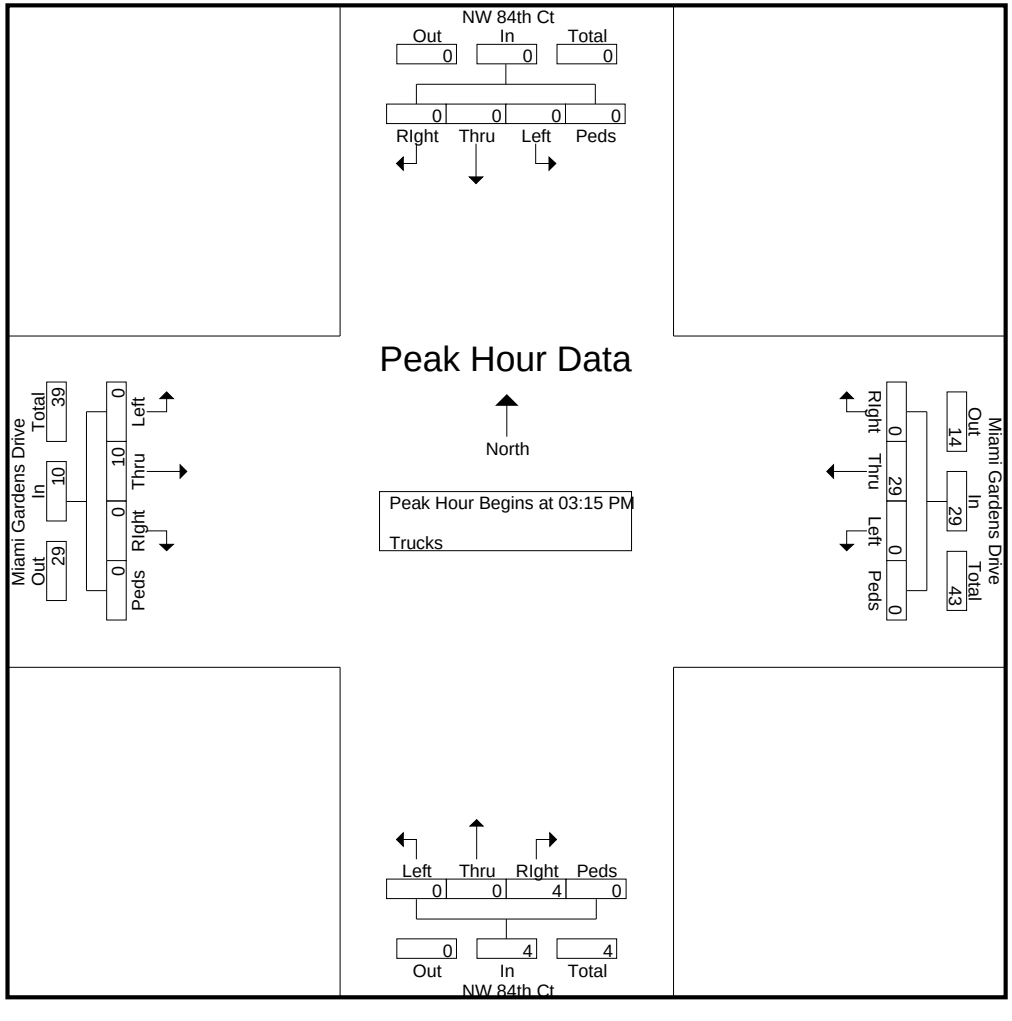

Miami Gardens Drive & NW 84th Court

File Name : Miami Gardens Drive & NW 84th Ct
Site Code : 00000000
Start Date : 5/4/2016
Page No : 1

Groups Printed- Veh - Trucks - Turns

	NW 84th Ct Southbound					NW 84th Ct Northbound					Miami Gardens Drive Westbound					Miami Gardens Drive Eastbound					
Start Time	Left	Thru	RIght	Peds/Bike	App. Total	Left	Thru	RIght	Peds/Bike	App. Total	Left	Thru	RIght	Peds/Bike	App. Total	Left	Thru	RIght	Peds/Bike	App. Total	Int. Total
06:00 AM	0	0	0	0	0	5	0	3	0	8	0	144	0	0	144	0	54	0	0	54	206
06:15 AM	0	0	0	0	0	8	0	1	0	9	0	239	0	0	239	0	73	0	0	73	321
06:30 AM	0	0	0	0	0	15	0	2	0	17	0	384	0	0	384	0	99	0	0	99	500
06:45 AM	0	0	0	0	0	15	0	5	0	20	0	475	0	0	475	0	143	0	0	143	638
Total	0	0	0	0	0	43	0	11	0	54	0	1242	0	0	1242	0	369	0	0	369	1665
07:00 AM	0	0	0	0	0	24	0	6	0	30	0	443	0	0	443	0	150	0	0	150	623
07:15 AM	0	0	0	0	0	25	0	17	0	42	0	519	0	0	519	0	172	0	0	172	733
07:30 AM	0	0	0	0	0	29	0	18	0	47	0	480	0	0	480	0	171	0	0	171	698
07:45 AM	0	0	0	0	0	40	0	11	1	52	0	507	0	0	507	0	178	0	0	178	737
Total	0	0	0	0	0	118	0	52	1	171	0	1949	0	0	1949	0	671	0	0	671	2791
08:00 AM	0	0	0	0	0	20	0	10	1	31	0	474	0	0	474	0	173	0	0	173	678
08:15 AM	0	0	0	0	0	19	0	11	0	30	0	373	0	0	373	0	196	0	0	196	599
08:30 AM	0	0	0	0	0	18	0	8	0	26	0	395	0	0	395	0	176	0	0	176	597
08:45 AM	0	0	0	0	0	9	0	3	0	12	0	326	0	0	326	0	166	0	0	166	504
Total	0	0	0	0	0	66	0	32	1	99	0	1568	0	0	1568	0	711	0	0	711	2378
*** BREAK ***																					
03:00 PM	0	0	0	0	0	4	0	2	0	6	0	170	0	0	170	0	248	0	0	248	424
03:15 PM	0	0	0	0	0	4	0	3	0	7	0	202	0	0	202	0	217	0	0	217	426
03:30 PM	0	0	0	0	0	3	0	2	0	5	0	238	0	0	238	0	293	0	0	293	536
03:45 PM	0	0	0	0	0	6	0	5	1	12	0	208	0	0	208	0	267	0	0	267	487
Total	0	0	0	0	0	17	0	12	1	30	0	818	0	0	818	0	1025	0	0	1025	1873
04:00 PM	0	0	0	0	0	3	0	9	0	12	0	193	0	0	193	0	299	0	0	299	504
04:15 PM	0	0	0	0	0	4	0	2	0	6	0	217	0	0	217	0	321	0	0	321	544
04:30 PM	0	0	0	0	0	2	0	2	0	4	0	202	0	0	202	0	310	0	0	310	516
04:45 PM	0	0	0	0	0	4	0	3	0	7	0	208	0	0	208	0	369	1	0	370	585
Total	0	0	0	0	0	13	0	16	0	29	0	820	0	0	820	0	1299	1	0	1300	2149
05:00 PM	0	0	0	0	0	4	0	2	0	6	0	206	0	0	206	0	388	0	0	388	600
05:15 PM	0	0	0	0	0	8	0	4	0	12	0	231	0	0	231	0	424	0	0	424	667
05:30 PM	0	0	0	0	0	7	0	7	0	14	0	243	0	0	243	0	438	0	0	438	695
05:45 PM	0	0	0	0	0	3	0	1	0	4	0	238	0	0	238	0	407	1	0	408	650
Total	0	0	0	0	0	22	0	14	0	36	0	918	0	0	918	0	1657	1	0	1658	2612
06:00 PM	0	0	0	0	0	6	0	5	0	11	0	222	0	0	222	0	379	0	0	379	612
06:15 PM	0	0	0	0	0	4	0	1	0	5	0	246	0	0	246	0	427	0	0	427	678
06:30 PM	0	0	0	0	0	7	0	2	2	11	0	204	0	0	204	0	463	1	0	464	679
06:45 PM	0	0	0	0	0	1	0	1	1	3	0	230	0	0	230	0	394	0	0	394	627
Total	0	0	0	0	0	18	0	9	3	30	0	902	0	0	902	0	1663	1	0	1664	2596
Grand Total	0	0	0	0	0	297	0	146	6	449	0	8217	0	0	8217	0	7395	3	0	7398	16064
Apprch %	0	0	0	0		66.1	0	32.5	1.3		0	100	0	0		0	100	0	0		
Total %	0	0	0	0	0	1.8	0	0.9	0	2.8	0	51.2	0	0	51.2	0	46	0	0	46.1	

Miami Gardens Drive & NW 84th Court

File Name : Miami Gardens Drive & NW 84th Ct
Site Code : 00000000
Start Date : 5/4/2016
Page No : 2

Groups Printed- Veh - Trucks - Turns

	NW 84th Ct Southbound					NW 84th Ct Northbound					Miami Gardens Drive Westbound					Miami Gardens Drive Eastbound					
	Left	Thru	RIght	Peds/Bike	App. Total	Left	Thru	RIght	Peds/Bike	App. Total	Left	Thru	RIght	Peds/Bike	App. Total	Left	Thru	RIght	Peds/Bike	App. Total	Int. Total
Veh	0	0	0	0	0	295	0	137	3	435	0	8096	0	0	8096	0	7326	3	0	7329	15860
% Veh	0	0	0	0	0	99.3	0	93.8	50	96.9	0	98.5	0	0	98.5	0	99.1	100	0	99.1	98.7
Trucks	0	0	0	0	0	2	0	9	3	14	0	121	0	0	121	0	69	0	0	69	204
% Trucks	0	0	0	0	0	0.7	0	6.2	50	3.1	0	1.5	0	0	1.5	0	0.9	0	0	0.9	1.3
U-Turns	0	0	0	0	0	0	0	0	0	0	0	0	0	0	0	0	0	0	0	0	0
% U-Turns	0	0	0	0	0	0	0	0	0	0	0	0	0	0	0	0	0	0	0	0	0

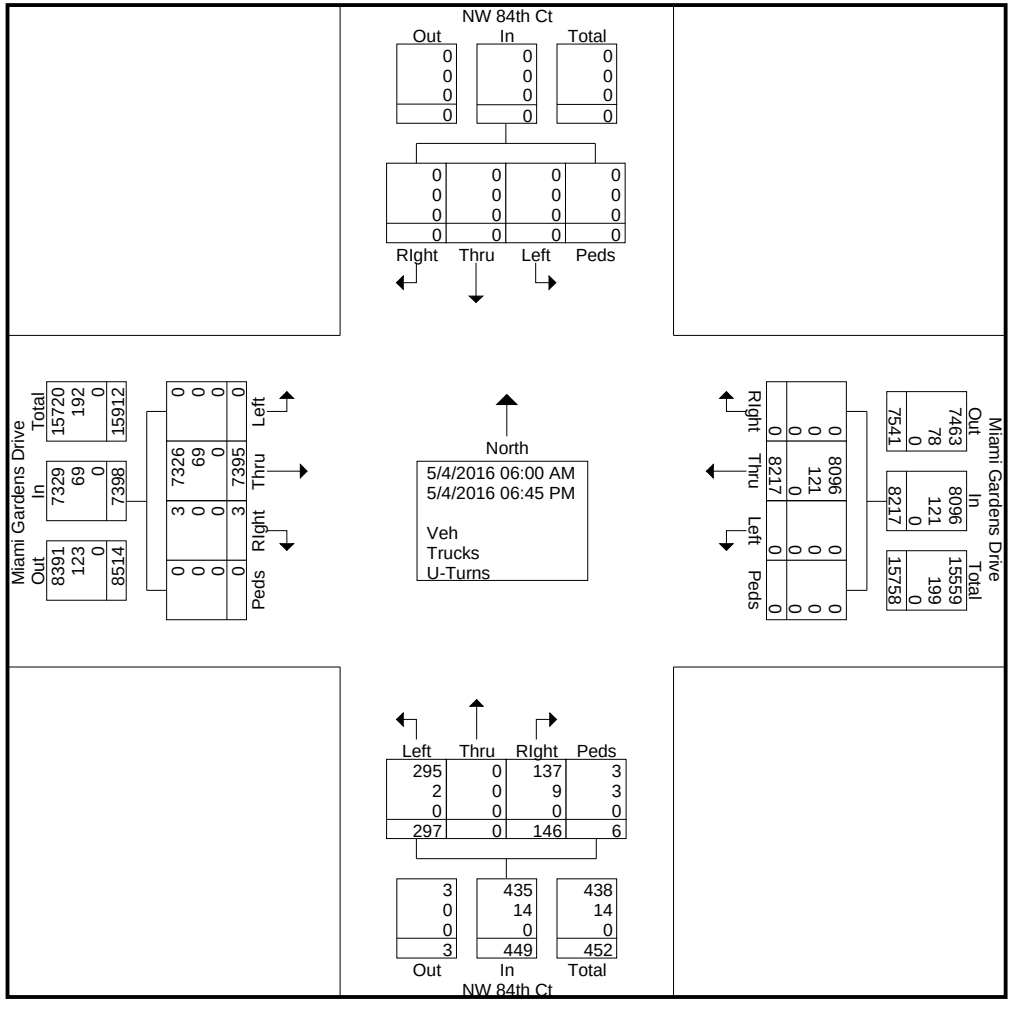

Miami Gardens Drive & NW 84th Court

File Name : Miami Gardens Drive & NW 84th Ct
Site Code : 00000000
Start Date : 5/4/2016
Page No : 3

	NW 84th Ct Southbound					NW 84th Ct Northbound					Miami Gardens Drive Westbound					Miami Gardens Drive Eastbound					
Start Time	Left	Thru	RIght	Peds/Bike	App. Total	Left	Thru	RIght	Peds/Bike	App. Total	Left	Thru	RIght	Peds/Bike	App. Total	Left	Thru	RIght	Peds/Bike	App. Total	Int. Total
Peak Hour Analysis From 06:00 AM to 08:45 AM - Peak 1 of 1																					
Peak Hour for Entire Intersection Begins at 07:15 AM																					
07:15 AM	0	0	0	0	0	25	0	17	0	42	0	**519**	0	0	**519**	0	172	0	0	172	733
07:30 AM	0	0	0	0	0	29	0	**18**	0	47	0	480	0	0	480	0	171	0	0	171	698
07:45 AM	0	0	0	0	0	**40**	0	11	**1**	**52**	0	507	0	0	507	0	**178**	0	0	**178**	**737**
08:00 AM	0	0	0	0	0	20	0	10	1	31	0	474	0	0	474	0	173	0	0	173	678
Total Volume	0	0	0	0	0	114	0	56	2	172	0	1980	0	0	1980	0	694	0	0	694	2846
% App. Total	0	0	0	0		66.3	0	32.6	1.2		0	100	0	0		0	100	0	0		
PHF	.000	.000	.000	.000	.000	.713	.000	.778	.500	.827	.000	.954	.000	.000	.954	.000	.975	.000	.000	.975	.965

Miami Gardens Drive & NW 84th Court

File Name : Miami Gardens Drive & NW 84th Ct
Site Code : 00000000
Start Date : 5/4/2016
Page No : 4

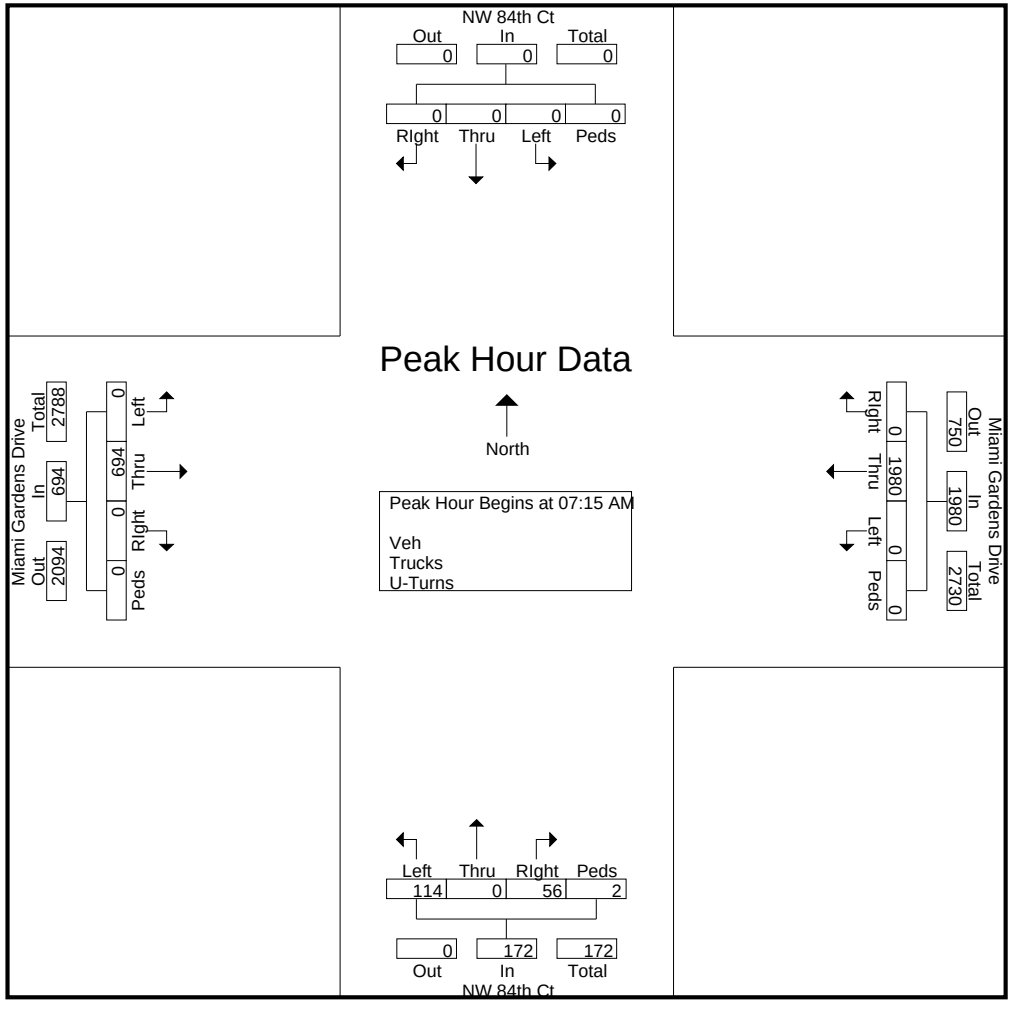

Miami Gardens Drive & NW 84th Court

File Name : Miami Gardens Drive & NW 84th Ct
Site Code : 00000000
Start Date : 5/4/2016
Page No : 5

	NW 84th Ct Southbound					NW 84th Ct Northbound					Miami Gardens Drive Westbound					Miami Gardens Drive Eastbound					
Start Time	Left	Thru	RIght	Peds/Bike	App. Total	Left	Thru	RIght	Peds/Bike	App. Total	Left	Thru	RIght	Peds/Bike	App. Total	Left	Thru	RIght	Peds/Bike	App. Total	Int. Total
Peak Hour Analysis From 03:00 PM to 06:45 PM - Peak 1 of 1																					
Peak Hour for Entire Intersection Begins at 05:30 PM																					
05:30 PM	0	0	0	0	0	**7**	0	**7**	0	**14**	0	243	0	0	243	0	**438**	0	0	**438**	**695**
05:45 PM	0	0	0	0	0	3	0	1	0	4	0	238	0	0	238	0	407	**1**	0	408	650
06:00 PM	0	0	0	0	0	6	0	5	0	11	0	222	0	0	222	0	379	0	0	379	612
06:15 PM	0	0	0	0	0	4	0	1	0	5	0	**246**	0	0	**246**	0	427	0	0	427	678
Total Volume	0	0	0	0	0	20	0	14	0	34	0	949	0	0	949	0	1651	1	0	1652	2635
% App. Total	0	0	0	0		58.8	0	41.2	0		0	100	0	0		0	99.9	0.1	0		
PHF	.000	.000	.000	.000	.000	.714	.000	.500	.000	.607	.000	.964	.000	.000	.964	.000	.942	.250	.000	.943	.948

Miami Gardens Drive & NW 84th Court

File Name : Miami Gardens Drive & NW 84th Ct
Site Code : 00000000
Start Date : 5/4/2016
Page No : 6

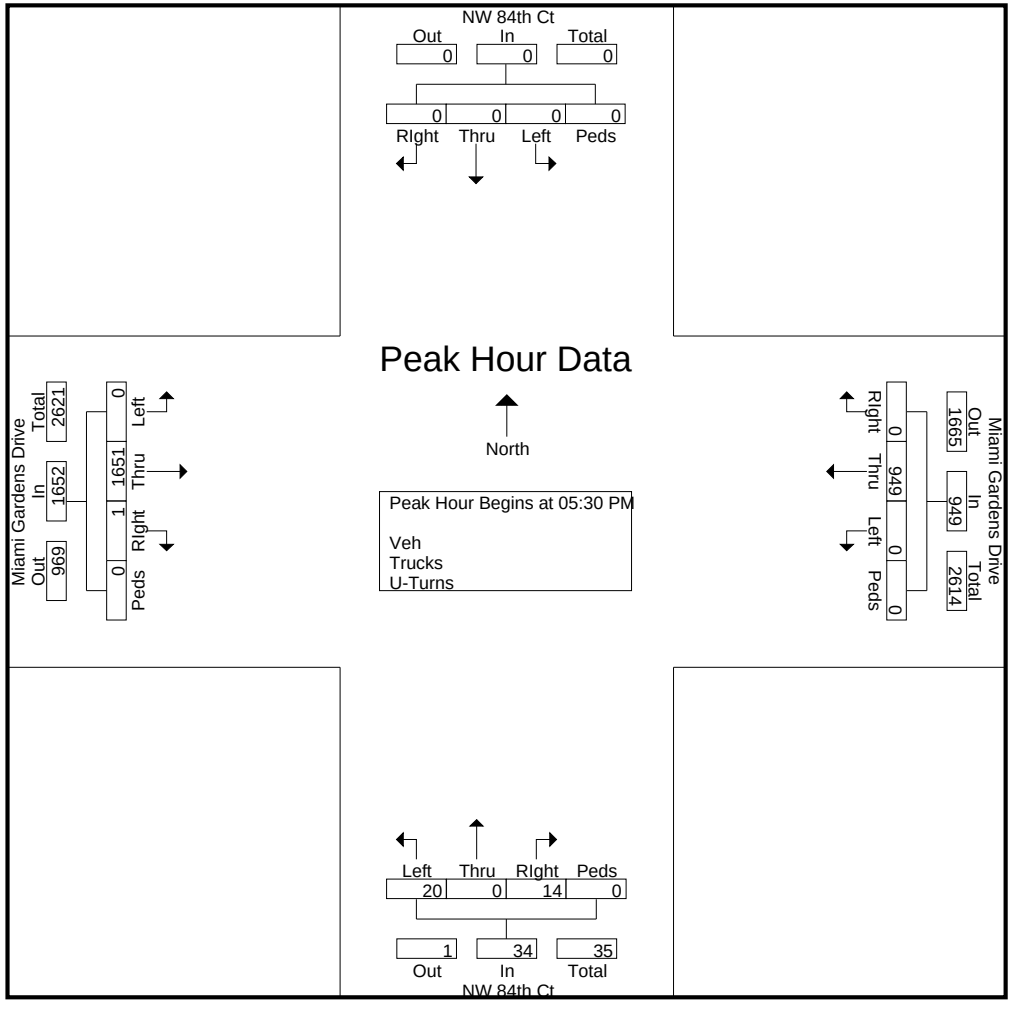

Miami Gardens Drive & Mother of Our Redeemer Catholic School Entrance

File Name : Miami Gardens Drive & Mother of Our Redeemer Catholic School Entrace
Site Code : 00000000
Start Date : 5/4/2016
Page No : 1

Groups Printed- Trucks

	Mother of Our Redeemer Catholic School Entrace Southbound					Mother of Our Redeemer Catholic School Entrace Northbound					Miami Gardens Drive Westbound					Miami Gardens Drive Eastbound					
Start Time	Left	Thru	RIght	Bikes	App. Total	Left	Thru	RIght	Bikes	App. Total	Left	Thru	RIght	Bikes	App. Total	Left	Thru	RIght	Bikes	App. Total	Int. Total
06:00 AM	0	0	0	0	0	0	0	0	0	0	0	6	0	0	6	0	2	0	0	2	8
06:15 AM	0	0	0	0	0	0	0	0	0	0	0	5	0	0	5	0	3	0	0	3	8
06:30 AM	0	0	0	0	0	0	0	0	0	0	0	4	0	0	4	0	5	0	0	5	9
06:45 AM	0	0	0	0	0	0	0	0	0	0	0	3	0	0	3	0	8	0	0	8	11
Total	0	0	0	0	0	0	0	0	0	0	0	18	0	0	18	0	18	0	0	18	36
07:00 AM	0	0	0	0	0	0	0	0	0	0	0	1	0	0	1	0	1	0	0	1	2
07:15 AM	0	0	0	0	0	0	0	0	0	0	0	5	0	0	5	0	1	0	0	1	6
07:30 AM	0	0	0	0	0	0	0	0	0	0	0	5	0	0	5	0	2	0	0	2	7
07:45 AM	0	0	0	1	1	0	0	0	0	0	0	3	0	0	3	0	1	0	0	1	5
Total	0	0	0	1	1	0	0	0	0	0	0	14	0	0	14	0	5	0	0	5	20
08:00 AM	0	0	0	0	0	0	0	0	0	0	0	4	0	0	4	0	2	0	0	2	6
08:15 AM	0	0	0	0	0	0	0	0	0	0	0	5	0	0	5	0	1	0	0	1	6
08:30 AM	0	0	0	0	0	0	0	0	0	0	0	7	0	0	7	0	3	0	0	3	10
08:45 AM	0	0	0	1	1	0	0	0	0	0	0	8	0	0	8	0	4	0	0	4	13
Total	0	0	0	1	1	0	0	0	0	0	0	24	0	0	24	0	10	0	0	10	35
*** BREAK ***																					
03:00 PM	0	0	0	0	0	0	0	0	0	0	0	7	0	0	7	0	0	0	0	0	7
03:15 PM	0	0	0	0	0	0	0	0	0	0	0	9	0	0	9	0	2	0	0	2	11
03:30 PM	0	0	0	0	0	0	0	0	0	0	0	7	0	0	7	0	1	0	0	1	8
03:45 PM	0	0	0	0	0	0	0	0	0	0	0	6	0	0	6	0	2	0	0	2	8
Total	0	0	0	0	0	0	0	0	0	0	0	29	0	0	29	0	5	0	0	5	34
04:00 PM	0	0	0	0	0	0	0	0	0	0	0	7	0	0	7	0	6	0	0	6	13
04:15 PM	0	0	0	0	0	0	0	0	0	0	0	3	0	0	3	0	3	0	0	3	6
04:30 PM	0	0	0	1	1	0	0	0	0	0	0	5	0	0	5	0	1	0	0	1	7
04:45 PM	0	0	0	1	1	0	0	0	0	0	0	7	0	0	7	0	5	0	0	5	13
Total	0	0	0	2	2	0	0	0	0	0	0	22	0	0	22	0	15	0	0	15	39
05:00 PM	0	0	0	0	0	0	0	0	0	0	0	1	0	0	1	0	2	0	0	2	3
05:15 PM	0	0	0	0	0	0	0	0	0	0	0	3	0	0	3	0	4	0	0	4	7
05:30 PM	0	0	0	2	2	0	0	0	0	0	0	2	0	0	2	0	2	0	0	2	6
05:45 PM	0	0	0	0	0	0	0	0	0	0	0	4	0	0	4	0	1	0	0	1	5
Total	0	0	0	2	2	0	0	0	0	0	0	10	0	0	10	0	9	0	0	9	21
06:00 PM	0	0	0	0	0	0	0	0	0	0	0	0	0	0	0	0	3	0	0	3	3
06:15 PM	0	0	0	0	0	0	0	0	0	0	0	1	0	0	1	0	1	0	0	1	2
06:30 PM	0	0	0	2	2	0	0	0	0	0	0	2	0	0	2	0	1	0	0	1	5
06:45 PM	0	0	0	0	0	0	0	0	0	0	0	3	0	0	3	0	1	0	0	1	4
Total	0	0	0	2	2	0	0	0	0	0	0	6	0	0	6	0	6	0	0	6	14
Grand Total	0	0	0	8	8	0	0	0	0	0	0	123	0	0	123	0	68	0	0	68	199
Apprch %	0	0	0	100		0	0	0	0		0	100	0	0		0	100	0	0		
Total %	0	0	0	4	4	0	0	0	0	0	0	61.8	0	0	61.8	0	34.2	0	0	34.2	

Miami Gardens Drive & Mother of Our Redeemer Catholic School Entrance

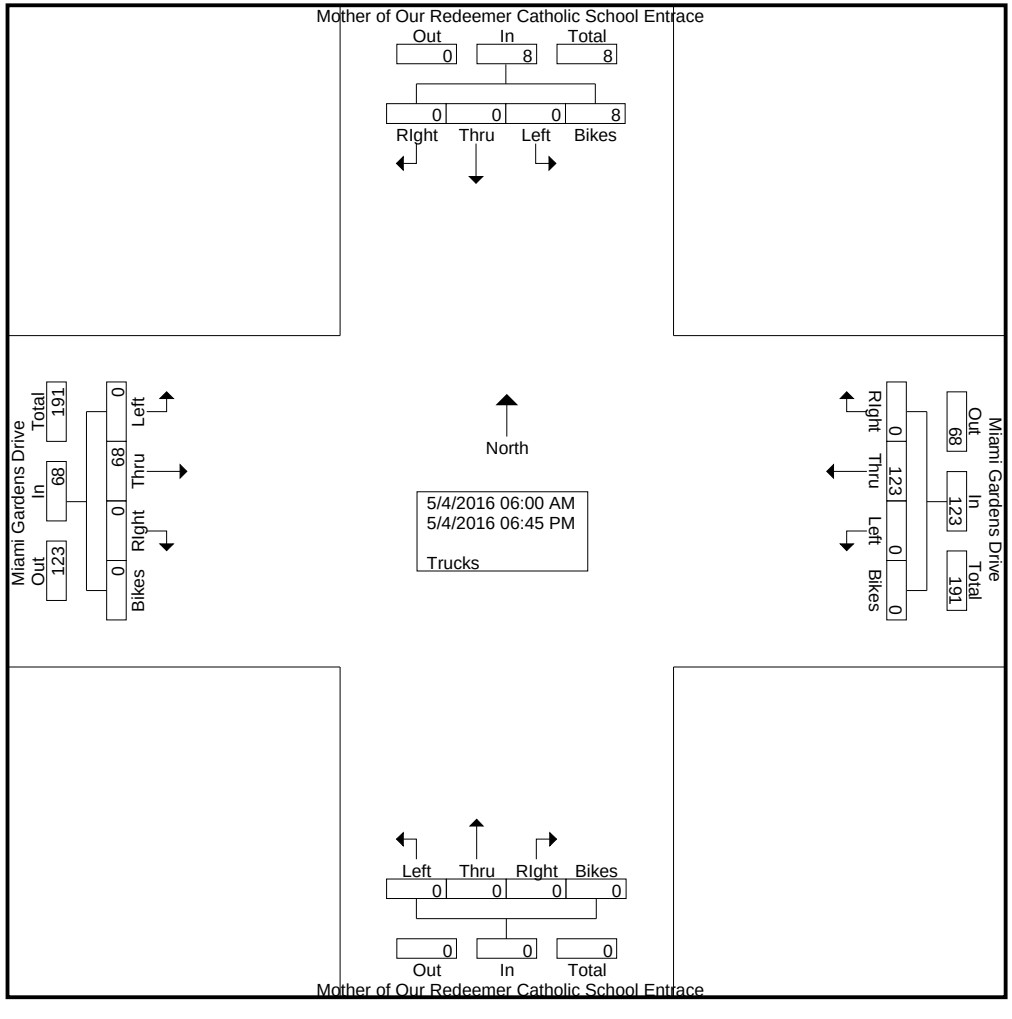

Miami Gardens Drive & Mother of Our Redeemer Catholic School Entrance

File Name : Miami Gardens Drive & Mother of Our Redeemer Catholic School Entrace
Site Code : 00000000
Start Date : 5/4/2016
Page No : 3

	Mother of Our Redeemer Catholic School Entrace Southbound					Mother of Our Redeemer Catholic School Entrace Northbound					Miami Gardens Drive Westbound					Miami Gardens Drive Eastbound					
Start Time	Left	Thru	RIght	Bikes	App. Total	Left	Thru	RIght	Bikes	App. Total	Left	Thru	RIght	Bikes	App. Total	Left	Thru	RIght	Bikes	App. Total	Int. Total
Peak Hour Analysis From 06:00 AM to 08:45 AM - Peak 1 of 1																					
Peak Hour for Entire Intersection Begins at 06:00 AM																					
06:00 AM	0	0	0	0	0	0	0	0	0	0	0	**6**	0	0	**6**	0	2	0	0	2	8
06:15 AM	0	0	0	0	0	0	0	0	0	0	0	5	0	0	5	0	3	0	0	3	8
06:30 AM	0	0	0	0	0	0	0	0	0	0	0	4	0	0	4	0	5	0	0	5	9
06:45 AM	0	0	0	0	0	0	0	0	0	0	0	3	0	0	3	0	**8**	0	0	**8**	**11**
Total Volume	0	0	0	0	0	0	0	0	0	0	0	18	0	0	18	0	18	0	0	18	36
% App. Total	0	0	0	0		0	0	0	0		0	100	0	0		0	100	0	0		
PHF	.000	.000	.000	.000	.000	.000	.000	.000	.000	.000	.000	.750	.000	.000	.750	.000	.563	.000	.000	.563	.818

Miami Gardens Drive & Mother of Our Redeemer Catholic School Entrance

File Name : Miami Gardens Drive & Mother of Our Redeemer Catholic School Entrace
Site Code : 00000000
Start Date : 5/4/2016
Page No : 4

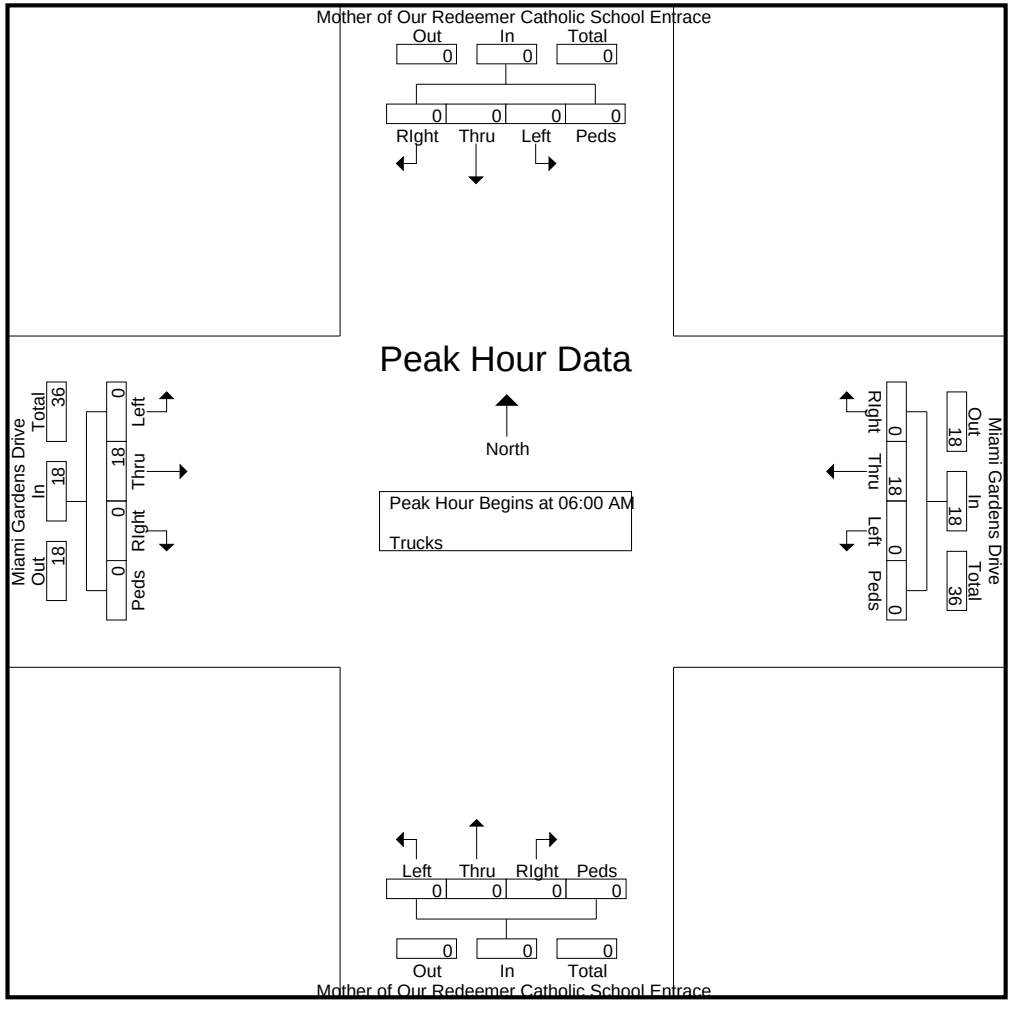

Miami Gardens Drive & Mother of Our Redeemer Catholic School Entrance

File Name : Miami Gardens Drive & Mother of Our Redeemer Catholic School Entrace
Site Code : 00000000
Start Date : 5/4/2016

	Mother of Our Redeemer Catholic School Entrace Southbound					Mother of Our Redeemer Catholic School Entrace Northbound					Miami Gardens Drive Westbound					Miami Gardens Drive Eastbound					
Start Time	Left	Thru	RIght	Bikes	App. Total	Left	Thru	RIght	Bikes	App. Total	Left	Thru	RIght	Bikes	App. Total	Left	Thru	RIght	Bikes	App. Total	Int. Total
Peak Hour Analysis From 03:00 PM to 06:45 PM - Peak 1 of 1																					
Peak Hour for Entire Intersection Begins at 03:15 PM																					
03:15 PM	0	0	0	0	0	0	0	0	0	0	0	**9**	0	0	**9**	0	2	0	0	2	11
03:30 PM	0	0	0	0	0	0	0	0	0	0	0	7	0	0	7	0	1	0	0	1	8
03:45 PM	0	0	0	0	0	0	0	0	0	0	0	6	0	0	6	0	2	0	0	2	8
04:00 PM	0	0	0	0	0	0	0	0	0	0	0	7	0	0	7	0	**6**	0	0	**6**	**13**
Total Volume	0	0	0	0	0	0	0	0	0	0	0	29	0	0	29	0	11	0	0	11	40
% App. Total	0	0	0	0		0	0	0	0		0	100	0	0		0	100	0	0		
PHF	.000	.000	.000	.000	.000	.000	.000	.000	.000	.000	.000	.806	.000	.000	.806	.000	.458	.000	.000	.458	.769

Miami Gardens Drive & Mother of Our Redeemer Catholic School Entrance

File Name : Miami Gardens Drive & Mother of Our Redeemer Catholic School Entrace
Site Code : 00000000
Start Date : 5/4/2016
Page No : 6

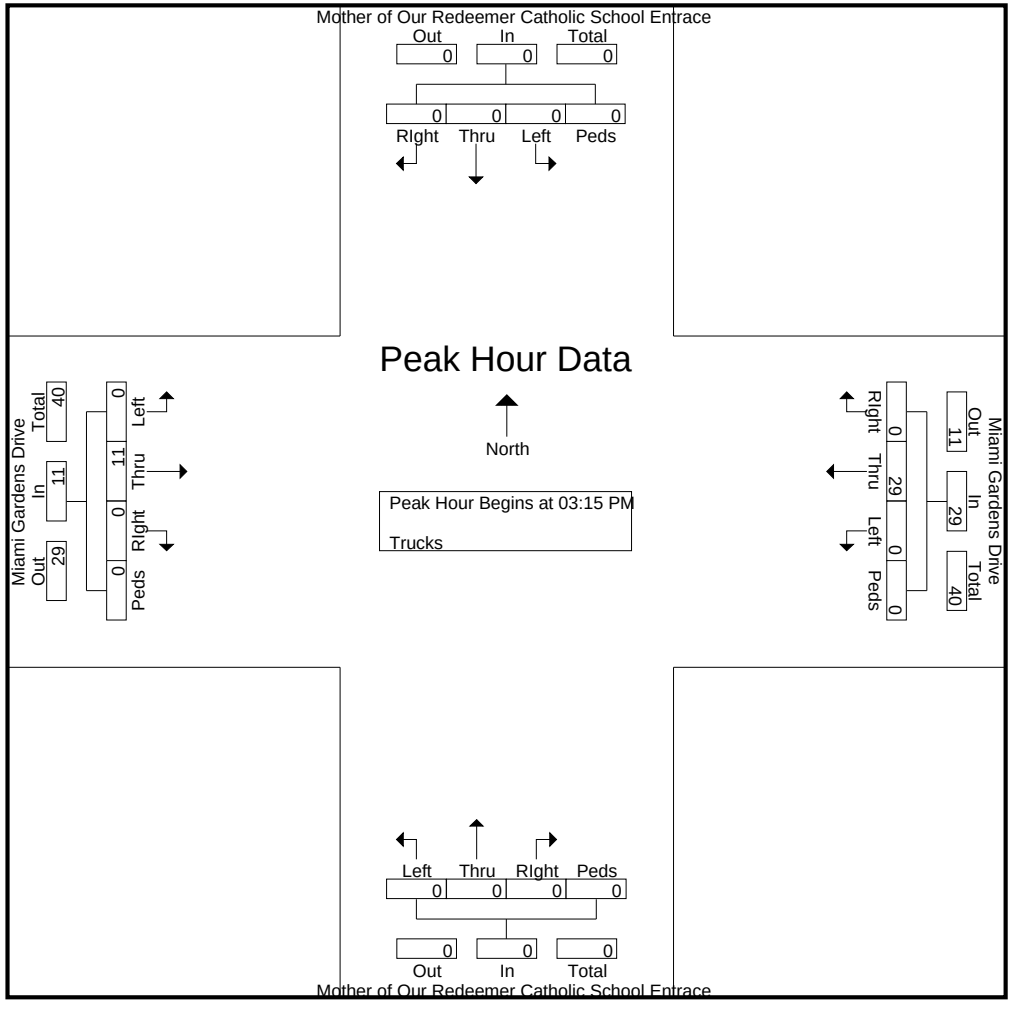

Miami Gardens Drive & Mother of Our Redeemer Catholic School Entrance

File Name : Miami Gardens Drive & Mother of Our Redeemer Catholic School Entrace
Site Code : 00000000
Start Date : 5/4/2016
Page No : 1

Groups Printed- Veh - Trucks - Turns

	Mother of Our Redeemer Catholic School Entrace Southbound					Mother of Our Redeemer Catholic School Entrace Northbound					Miami Gardens Drive Westbound					Miami Gardens Drive Eastbound					
Start Time	Left	Thru	RIght	Peds/Bike	App. Total	Left	Thru	RIght	Peds/Bike	App. Total	Left	Thru	RIght	Peds/Bike	App. Total	Left	Thru	RIght	Peds/Bike	App. Total	Int. Total
06:00 AM	0	0	1	0	1	0	0	0	0	0	0	138	0	0	138	0	58	0	0	58	197
06:15 AM	0	0	0	1	1	0	0	0	0	0	0	244	0	0	244	0	77	0	0	77	322
06:30 AM	0	0	0	0	0	0	0	0	0	0	0	361	0	0	361	0	105	0	0	105	466
06:45 AM	0	0	1	0	1	0	0	0	0	0	0	459	0	0	459	0	156	0	0	156	616
Total	0	0	2	1	3	0	0	0	0	0	0	1202	0	0	1202	0	396	0	0	396	1601
07:00 AM	0	0	0	2	2	0	0	0	0	0	0	458	1	0	459	0	156	0	0	156	617
07:15 AM	0	0	0	2	2	0	0	0	0	0	0	504	0	0	504	0	190	0	0	190	696
07:30 AM	0	0	4	1	5	0	0	0	0	0	0	470	0	0	470	0	191	0	0	191	666
07:45 AM	0	0	6	2	8	0	0	0	0	0	0	484	0	0	484	0	189	0	0	189	681
Total	0	0	10	7	17	0	0	0	0	0	0	1916	1	0	1917	0	726	0	0	726	2660
08:00 AM	0	0	3	3	6	0	0	0	0	0	0	455	2	0	457	0	185	0	0	185	648
08:15 AM	0	0	1	0	1	0	0	0	0	0	0	361	5	0	366	0	207	0	0	207	574
08:30 AM	0	0	4	0	4	0	0	0	0	0	0	392	3	0	395	0	187	0	0	187	586
08:45 AM	0	0	1	4	5	0	0	0	0	0	0	331	2	0	333	0	173	0	0	173	511
Total	0	0	9	7	16	0	0	0	0	0	0	1539	12	0	1551	0	752	0	0	752	2319
*** BREAK ***																					
03:00 PM	0	0	1	0	1	0	0	0	0	0	0	173	3	0	176	0	250	0	0	250	427
03:15 PM	0	0	0	0	0	0	0	0	0	0	0	204	0	0	204	0	222	0	0	222	426
03:30 PM	0	0	1	0	1	0	0	0	0	0	0	233	0	0	233	0	296	0	0	296	530
03:45 PM	0	0	0	0	0	0	0	0	0	0	0	218	1	0	219	0	273	0	0	273	492
Total	0	0	2	0	2	0	0	0	0	0	0	828	4	0	832	0	1041	0	0	1041	1875
04:00 PM	0	0	0	1	1	0	0	0	0	0	0	200	1	0	201	0	311	0	0	311	513
04:15 PM	0	0	0	0	0	0	0	0	0	0	0	225	0	2	227	0	326	0	0	326	553
04:30 PM	0	0	0	3	3	0	0	0	0	0	0	193	0	0	193	0	313	0	0	313	509
04:45 PM	0	0	1	2	3	0	0	0	0	0	0	187	1	0	188	0	377	0	0	377	568
Total	0	0	1	6	7	0	0	0	0	0	0	805	2	2	809	0	1327	0	0	1327	2143
05:00 PM	0	0	2	6	8	0	0	0	0	0	0	216	2	0	218	0	392	0	0	392	618
05:15 PM	0	0	1	2	3	0	0	0	0	0	0	238	2	0	240	0	432	0	0	432	675
05:30 PM	0	0	0	2	2	0	0	0	0	0	0	216	1	0	217	0	447	0	0	447	666
05:45 PM	0	0	1	0	1	0	0	0	0	0	0	224	5	0	229	0	409	0	0	409	639
Total	0	0	4	10	14	0	0	0	0	0	0	894	10	0	904	0	1680	0	0	1680	2598
06:00 PM	0	0	1	3	4	0	0	0	0	0	0	215	6	0	221	0	387	0	0	387	612
06:15 PM	0	0	1	3	4	0	0	0	0	0	0	255	11	0	266	0	429	0	0	429	699
06:30 PM	0	0	1	5	6	0	0	0	0	0	0	218	9	0	227	0	466	0	0	466	699
06:45 PM	0	0	0	0	0	0	0	0	0	0	0	210	2	0	212	0	396	0	0	396	608
Total	0	0	3	11	14	0	0	0	0	0	0	898	28	0	926	0	1678	0	0	1678	2618
Grand Total	0	0	31	42	73	0	0	0	0	0	0	8082	57	2	8141	0	7600	0	0	7600	15814
Apprch %	0	0	42.5	57.5		0	0	0	0		0	99.3	0.7	0		0	100	0	0		
Total %	0	0	0.2	0.3	0.5	0	0	0	0	0	0	51.1	0.4	0	51.5	0	48.1	0	0	48.1	

Miami Gardens Drive & Mother of Our Redeemer Catholic School Entrance

File Name : Miami Gardens Drive & Mother of Our Redeemer Catholic School Entrace
Site Code : 00000000
Start Date : 5/4/2016

Groups Printed- Veh - Trucks - Turns

	Mother of Our Redeemer Catholic School Entrace Southbound					Mother of Our Redeemer Catholic School Entrace Northbound					Miami Gardens Drive Westbound					Miami Gardens Drive Eastbound					
	Left	Thru	RIght	Peds/Bike	App. Total	Left	Thru	RIght	Peds/Bike	App. Total	Left	Thru	RIght	Peds/Bike	App. Total	Left	Thru	RIght	Peds/Bike	App. Total	Int. Total
Veh	0	0	31	34	65	0	0	0	0	0	0	7959	57	2	8018	0	7532	0	0	7532	15615
% Veh	0	0	100	81	89	0	0	0	0	0	0	98.5	100	100	98.5	0	99.1	0	0	99.1	98.7
Trucks	0	0	0	8	8	0	0	0	0	0	0	123	0	0	123	0	68	0	0	68	199
% Trucks	0	0	0	19	11	0	0	0	0	0	0	1.5	0	0	1.5	0	0.9	0	0	0.9	1.3
U-Turns	0	0	0	0	0	0	0	0	0	0	0	0	0	0	0	0	0	0	0	0	0
% U-Turns	0	0	0	0	0	0	0	0	0	0	0	0	0	0	0	0	0	0	0	0	0

Miami Gardens Drive & Mother of Our Redeemer Catholic School Entrance

File Name : Miami Gardens Drive & Mother of Our Redeemer Catholic School Entrace
Site Code : 00000000
Start Date : 5/4/2016
Page No : 3

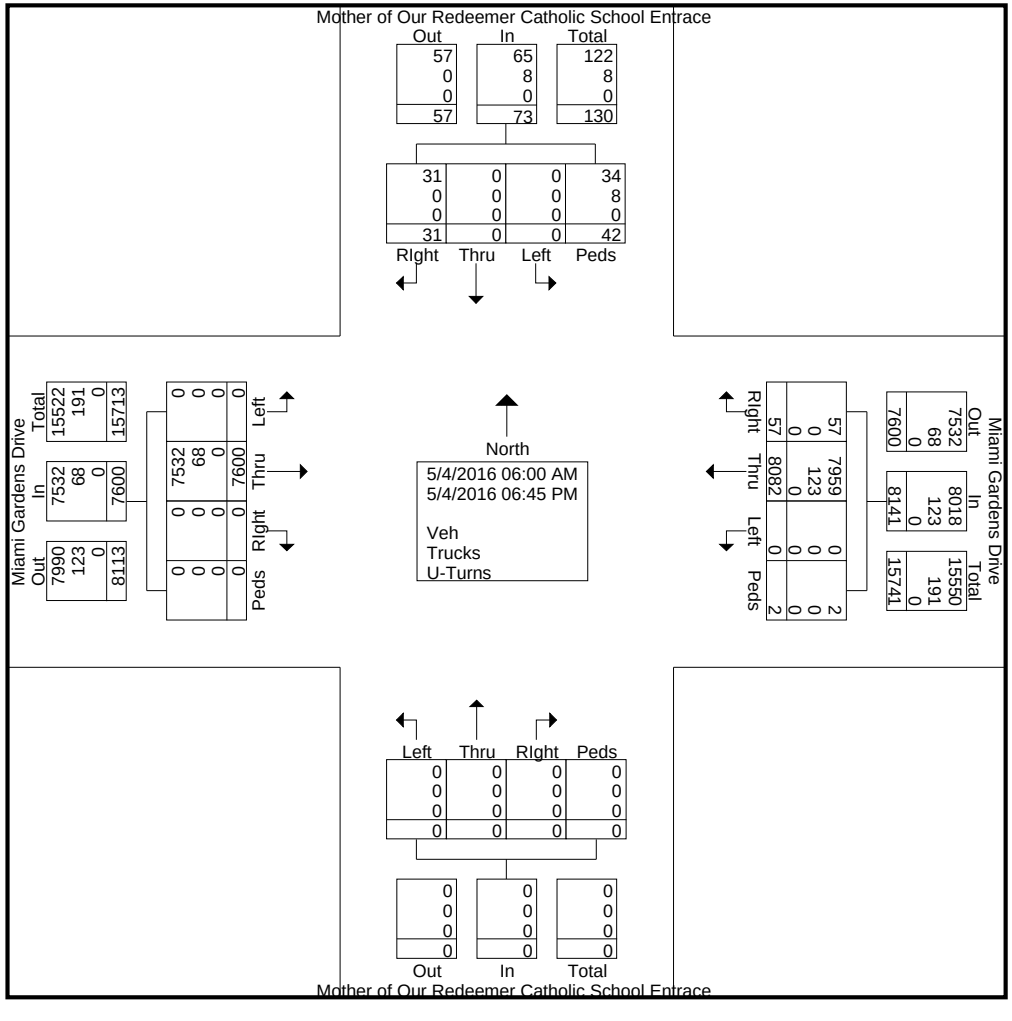

Miami Gardens Drive & Mother of Our Redeemer Catholic School Entrance

File Name : Miami Gardens Drive & Mother of Our Redeemer Catholic School Entrace
Site Code : 00000000
Start Date : 5/4/2016
Page No : 4

	Mother of Our Redeemer Catholic School Entrace Southbound					Mother of Our Redeemer Catholic School Entrace Northbound					Miami Gardens Drive Westbound					Miami Gardens Drive Eastbound					
Start Time	Left	Thru	RIght	Peds/Bike	App. Total	Left	Thru	RIght	Peds/Bike	App. Total	Left	Thru	RIght	Peds/Bike	App. Total	Left	Thru	RIght	Peds/Bike	App. Total	Int. Total
Peak Hour Analysis From 06:00 AM to 08:45 AM - Peak 1 of 1																					
Peak Hour for Entire Intersection Begins at 07:15 AM																					
07:15 AM	0	0	0	2	2	0	0	0	0	0	0	**504**	0	0	**504**	0	190	0	0	190	**696**
07:30 AM	0	0	4	1	5	0	0	0	0	0	0	470	0	0	470	0	**191**	0	0	**191**	666
07:45 AM	0	0	**6**	2	**8**	0	0	0	0	0	0	484	0	0	484	0	189	0	0	189	681
08:00 AM	0	0	3	**3**	6	0	0	0	0	0	0	455	**2**	0	457	0	185	0	0	185	648
Total Volume	0	0	13	8	21	0	0	0	0	0	0	1913	2	0	1915	0	755	0	0	755	2691
% App. Total	0	0	61.9	38.1		0	0	0	0		0	99.9	0.1	0		0	100	0	0		
PHF	.000	.000	.542	.667	.656	.000	.000	.000	.000	.000	.000	.949	.250	.000	.950	.000	.988	.000	.000	.988	.967

Miami Gardens Drive & Mother of Our Redeemer Catholic School Entrance

File Name : Miami Gardens Drive & Mother of Our Redeemer Catholic School Entrace
Site Code : 00000000
Start Date : 5/4/2016
Page No : 5

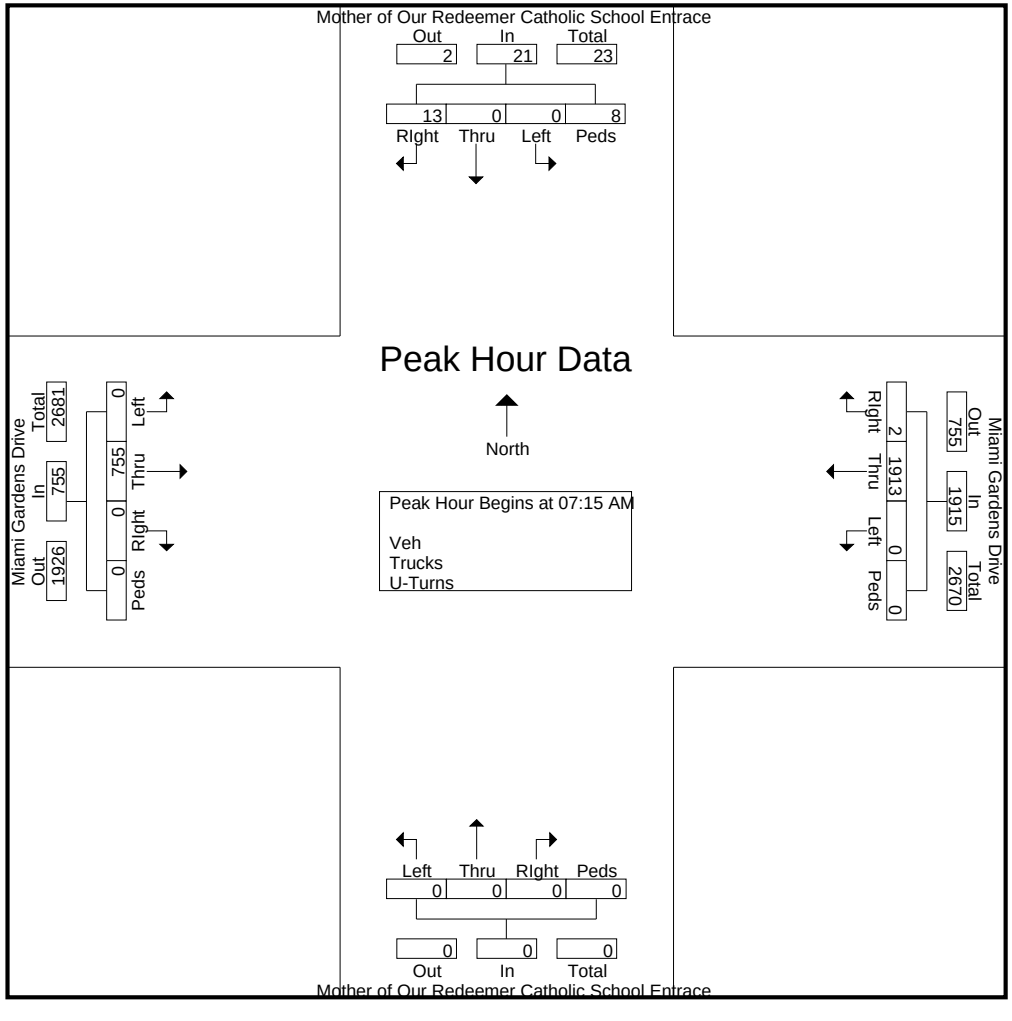

Miami Gardens Drive & Mother of Our Redeemer Catholic School Entrance

File Name : Miami Gardens Drive & Mother of Our Redeemer Catholic School Entrace
Site Code : 00000000
Start Date : 5/4/2016
Page No : 6

	Mother of Our Redeemer Catholic School Entrace Southbound					Mother of Our Redeemer Catholic School Entrace Northbound					Miami Gardens Drive Westbound					Miami Gardens Drive Eastbound					
Start Time	Left	Thru	RIght	Peds/Bike	App. Total	Left	Thru	RIght	Peds/Bike	App. Total	Left	Thru	RIght	Peds/Bike	App. Total	Left	Thru	RIght	Peds/Bike	App. Total	Int. Total
Peak Hour Analysis From 03:00 PM to 06:45 PM - Peak 1 of 1																					
Peak Hour for Entire Intersection Begins at 05:45 PM																					
05:45 PM	0	0	**1**	0	1	0	0	0	0	0	0	224	5	0	229	0	409	0	0	409	639
06:00 PM	0	0	1	3	4	0	0	0	0	0	0	215	6	0	221	0	387	0	0	387	612
06:15 PM	0	0	1	3	4	0	0	0	0	0	0	**255**	**11**	0	**266**	0	429	0	0	429	**699**
06:30 PM	0	0	1	**5**	**6**	0	0	0	0	0	0	218	9	0	227	0	**466**	0	0	**466**	699
Total Volume	0	0	4	11	15	0	0	0	0	0	0	912	31	0	943	0	1691	0	0	1691	2649
% App. Total	0	0	26.7	73.3		0	0	0	0		0	96.7	3.3	0		0	100	0	0		
PHF	.000	.000	1.00	.550	.625	.000	.000	.000	.000	.000	.000	.894	.705	.000	.886	.000	.907	.000	.000	.907	.947

Miami Gardens Drive & Mother of Our Redeemer Catholic School Entrance

File Name : Miami Gardens Drive & Mother of Our Redeemer Catholic School Entrace
Site Code : 00000000
Start Date : 5/4/2016
Page No : 7

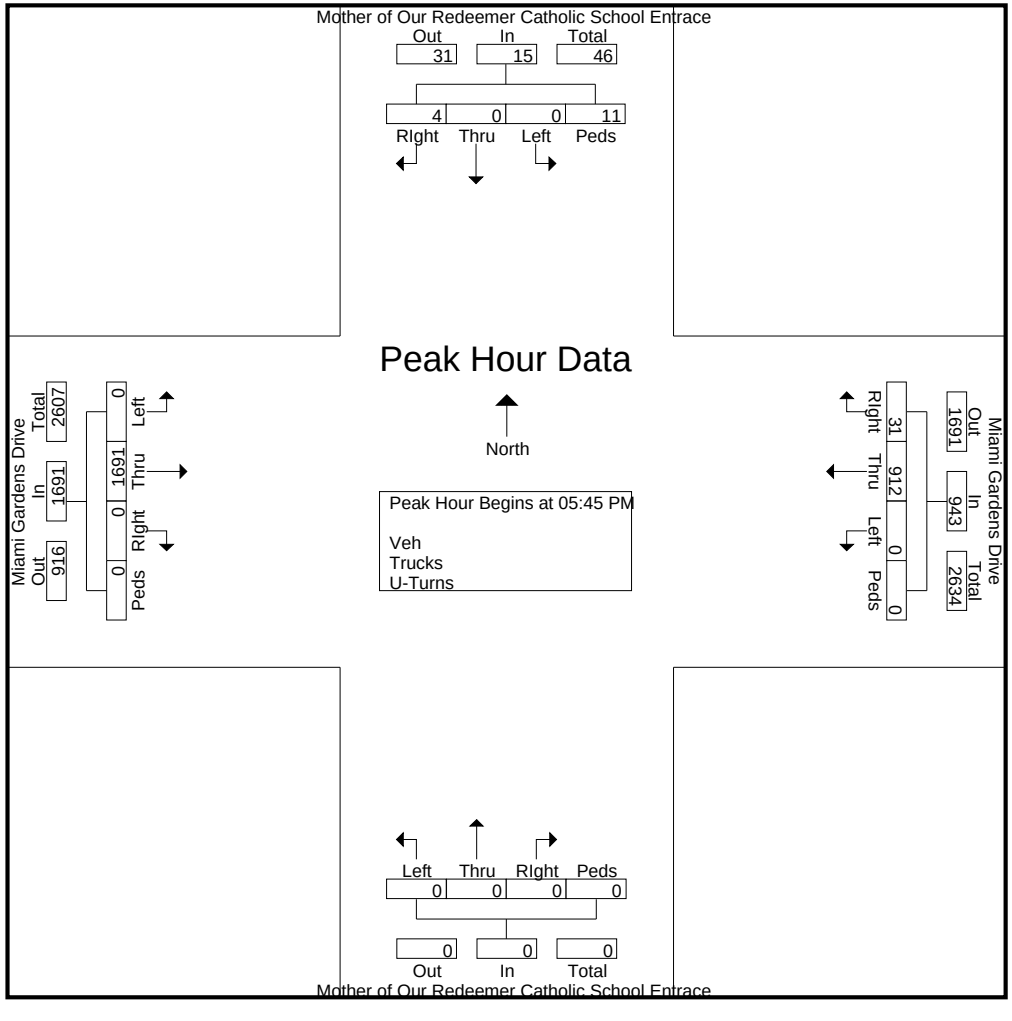

Miami Gardens Drive & NW 82nd Avenue

File Name : Miami Gardens Drive & NW 82nd Avenue
Site Code : 00000000
Start Date : 5/4/2016
Page No : 1

Groups Printed- Trucks

	NW 82nd Avenue Southbound					NW 82nd Avenue Northbound					Miami Gardens Drive Westbound					Miami Gardens Drive Eastbound					
Start Time	Left	Thru	RIght	Bikes	App. Total	Left	Thru	RIght	Bikes	App. Total	Left	Thru	RIght	Bikes	App. Total	Left	Thru	RIght	Bikes	App. Total	Int. Total
06:00 AM	4	1	0	0	5	3	2	0	0	5	0	3	0	0	3	1	1	0	0	2	15
06:15 AM	3	1	0	0	4	0	0	0	0	0	0	6	0	0	6	1	2	1	0	4	14
06:30 AM	1	3	0	0	4	0	0	0	0	0	0	5	2	0	7	0	6	0	0	6	17
06:45 AM	1	1	0	0	2	0	0	1	0	1	0	1	1	0	2	0	10	0	0	10	15
Total	9	6	0	0	15	3	2	1	0	6	0	15	3	0	18	2	19	1	0	22	61
07:00 AM	1	0	0	0	1	1	0	0	0	1	0	1	1	0	2	0	0	0	0	0	4
07:15 AM	3	0	0	0	3	1	0	0	0	1	1	4	0	0	5	1	2	0	0	3	12
07:30 AM	1	1	1	0	3	0	0	1	0	1	1	4	1	0	6	0	3	0	0	3	13
07:45 AM	1	1	0	1	3	1	1	0	0	2	0	2	0	0	2	1	1	0	0	2	9
Total	6	2	1	1	10	3	1	1	0	5	2	11	2	0	15	2	6	0	0	8	38
08:00 AM	2	0	1	0	3	0	0	0	1	1	3	4	2	0	9	0	1	0	0	1	14
08:15 AM	2	1	1	0	4	0	1	0	0	1	0	3	2	0	5	0	1	0	0	1	11
08:30 AM	3	2	0	0	5	1	0	0	1	2	0	4	6	0	10	1	2	2	0	5	22
08:45 AM	1	2	0	0	3	1	0	1	0	2	2	6	0	0	8	0	2	1	0	3	16
Total	8	5	2	0	15	2	1	1	2	6	5	17	10	0	32	1	6	3	0	10	63
*** BREAK ***																					
03:00 PM	0	1	1	0	2	0	0	0	0	0	1	5	1	0	7	0	0	0	0	0	9
03:15 PM	2	1	0	0	3	1	0	0	0	1	1	4	3	0	8	0	1	1	0	2	14
03:30 PM	2	1	2	0	5	1	2	2	0	5	3	3	4	0	10	1	0	0	0	1	21
03:45 PM	2	2	1	0	5	2	2	0	0	4	0	1	1	0	2	0	2	0	0	2	13
Total	6	5	4	0	15	4	4	2	0	10	5	13	9	0	27	1	3	1	0	5	57
04:00 PM	1	1	0	0	2	2	0	1	0	3	0	3	0	0	3	4	5	0	0	9	17
04:15 PM	1	0	0	0	1	0	1	1	0	2	0	3	0	0	3	1	5	0	0	6	12
04:30 PM	2	1	0	0	3	0	1	0	0	1	0	7	0	0	7	1	1	0	0	2	13
04:45 PM	0	0	0	0	0	1	0	0	0	1	0	4	0	0	4	4	2	1	0	7	12
Total	4	2	0	0	6	3	2	2	0	7	0	17	0	0	17	10	13	1	0	24	54
05:00 PM	1	1	0	0	2	1	0	0	0	1	1	1	0	0	2	1	3	0	0	4	9
05:15 PM	0	0	0	0	0	0	0	0	0	0	0	2	0	0	2	0	1	0	0	1	3
05:30 PM	0	0	0	2	2	0	0	1	0	1	0	2	0	0	2	1	2	0	0	3	8
05:45 PM	1	0	0	0	1	1	0	1	0	2	0	2	0	0	2	0	2	0	0	2	7
Total	2	1	0	2	5	2	0	2	0	4	1	7	0	0	8	2	8	0	0	10	27
06:00 PM	0	0	0	0	0	0	0	2	0	2	0	0	0	0	0	0	1	0	0	1	3
06:15 PM	1	1	0	0	2	0	0	0	0	0	0	1	0	0	1	0	1	0	0	1	4
06:30 PM	1	0	0	2	3	0	0	0	3	3	0	1	0	0	1	0	0	0	0	0	7
06:45 PM	0	0	1	0	1	0	0	0	1	1	0	3	0	0	3	0	0	0	0	0	5
Total	2	1	1	2	6	0	0	2	4	6	0	5	0	0	5	0	2	0	0	2	19
Grand Total	37	22	8	5	72	17	10	11	6	44	13	85	24	0	122	18	57	6	0	81	319
Apprch %	51.4	30.6	11.1	6.9		38.6	22.7	25	13.6		10.7	69.7	19.7	0		22.2	70.4	7.4	0		
Total %	11.6	6.9	2.5	1.6	22.6	5.3	3.1	3.4	1.9	13.8	4.1	26.6	7.5	0	38.2	5.6	17.9	1.9	0	25.4	

Miami Gardens Drive & NW 82nd Avenue

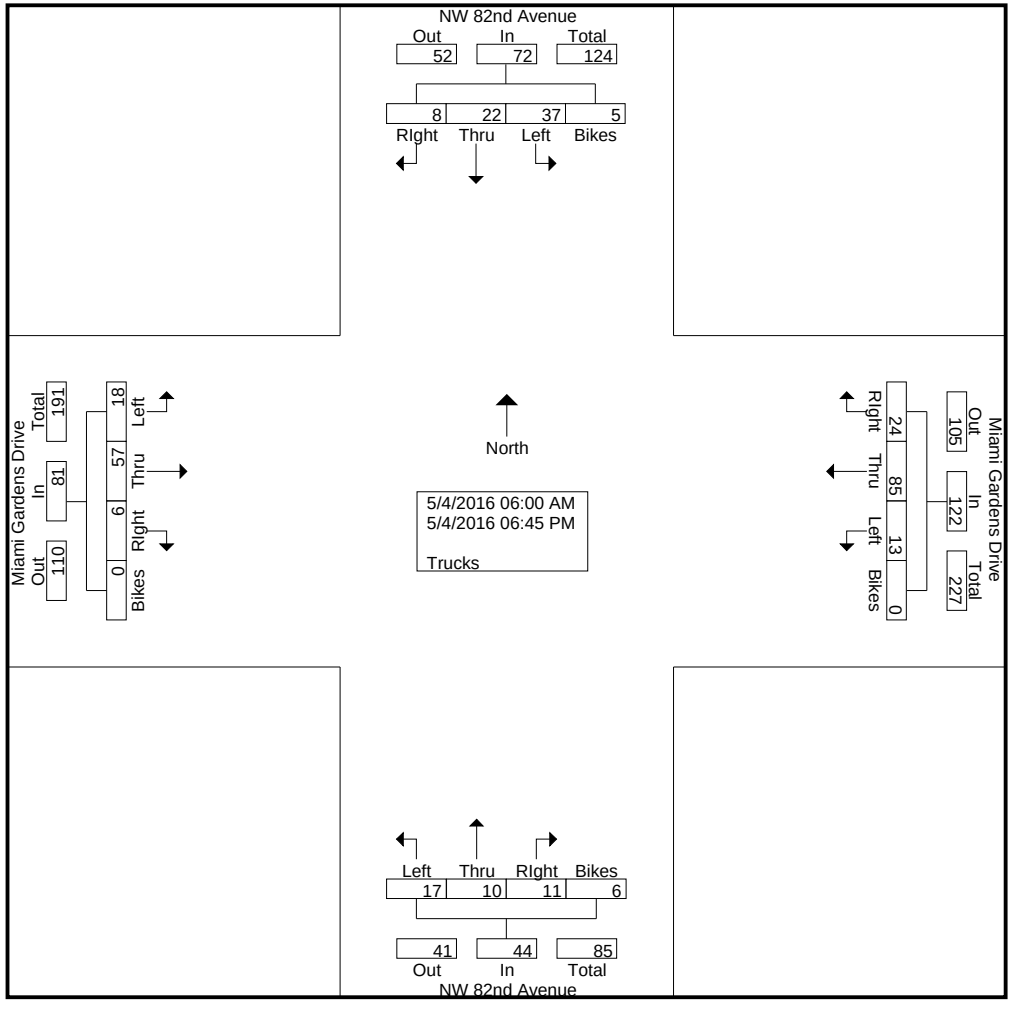

Miami Gardens Drive & NW 82nd Avenue

File Name : Miami Gardens Drive & NW 82nd Avenue
Site Code : 00000000
Start Date : 5/4/2016
Page No : 3

	NW 82nd Avenue Southbound					NW 82nd Avenue Northbound					Miami Gardens Drive Westbound					Miami Gardens Drive Eastbound					
Start Time	Left	Thru	RIght	Bikes	App. Total	Left	Thru	RIght	Bikes	App. Total	Left	Thru	RIght	Bikes	App. Total	Left	Thru	RIght	Bikes	App. Total	Int. Total
Peak Hour Analysis From 06:00 AM to 08:45 AM - Peak 1 of 1																					
Peak Hour for Entire Intersection Begins at 08:00 AM																					
08:00 AM	2	0	**1**	0	3	0	0	0	**1**	1	**3**	4	2	0	9	0	1	0	0	1	14
08:15 AM	2	1	1	0	4	0	**1**	0	0	1	0	3	2	0	5	0	1	0	0	1	11
08:30 AM	**3**	**2**	0	0	**5**	**1**	0	0	1	**2**	0	4	**6**	0	**10**	**1**	**2**	**2**	0	**5**	**22**
08:45 AM	1	2	0	0	3	1	0	**1**	0	2	2	**6**	0	0	8	0	2	1	0	3	16
Total Volume	8	5	2	0	15	2	1	1	2	6	5	17	10	0	32	1	6	3	0	10	63
% App. Total	53.3	33.3	13.3	0		33.3	16.7	16.7	33.3		15.6	53.1	31.2	0		10	60	30	0		
PHF	.667	.625	.500	.000	.750	.500	.250	.250	.500	.750	.417	.708	.417	.000	.800	.250	.750	.375	.000	.500	.716

Miami Gardens Drive & NW 82nd Avenue

File Name : Miami Gardens Drive & NW 82nd Avenue
Site Code : 00000000
Start Date : 5/4/2016
Page No : 4

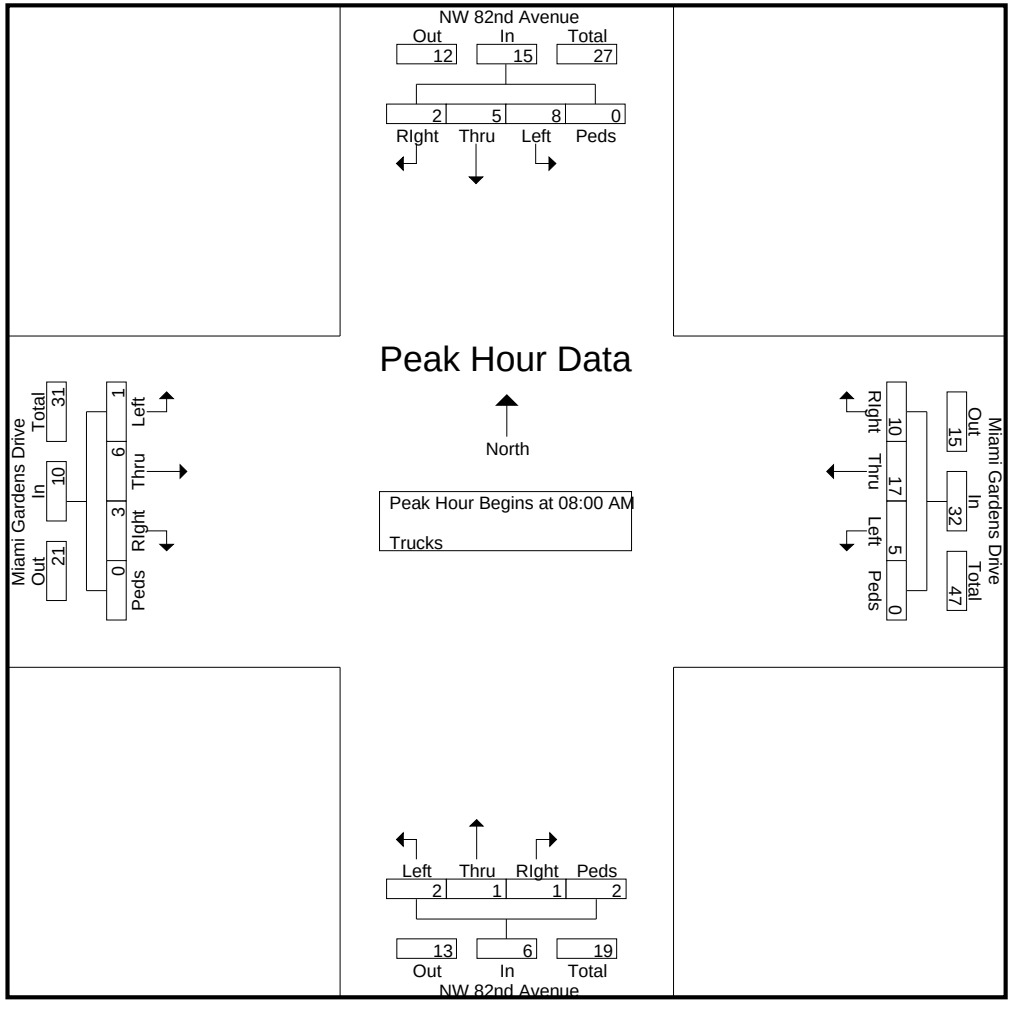

Miami Gardens Drive & NW 82nd Avenue

File Name : Miami Gardens Drive & NW 82nd Avenue
Site Code : 00000000
Start Date : 5/4/2016
Page No : 5

	NW 82nd Avenue Southbound					NW 82nd Avenue Northbound					Miami Gardens Drive Westbound					Miami Gardens Drive Eastbound					
Start Time	Left	Thru	RIght	Bikes	App. Total	Left	Thru	RIght	Bikes	App. Total	Left	Thru	RIght	Bikes	App. Total	Left	Thru	RIght	Bikes	App. Total	Int. Total
Peak Hour Analysis From 03:00 PM to 06:45 PM - Peak 1 of 1																					
Peak Hour for Entire Intersection Begins at 03:15 PM																					
03:15 PM	**2**	1	0	0	3	1	0	0	0	1	1	**4**	3	0	8	0	1	**1**	0	2	14
03:30 PM	2	1	**2**	0	**5**	1	**2**	**2**	0	**5**	**3**	3	**4**	0	**10**	1	0	0	0	1	**21**
03:45 PM	2	**2**	1	0	5	**2**	2	0	0	4	0	1	1	0	2	0	2	0	0	2	13
04:00 PM	1	1	0	0	2	2	0	1	0	3	0	3	0	0	3	**4**	**5**	0	0	**9**	17
Total Volume	7	5	3	0	15	6	4	3	0	13	4	11	8	0	23	5	8	1	0	14	65
% App. Total	46.7	33.3	20	0		46.2	30.8	23.1	0		17.4	47.8	34.8	0		35.7	57.1	7.1	0		
PHF	.875	.625	.375	.000	.750	.750	.500	.375	.000	.650	.333	.688	.500	.000	.575	.313	.400	.250	.000	.389	.774

Miami Gardens Drive & NW 82nd Avenue

File Name : Miami Gardens Drive & NW 82nd Avenue
Site Code : 00000000
Start Date : 5/4/2016
Page No : 6

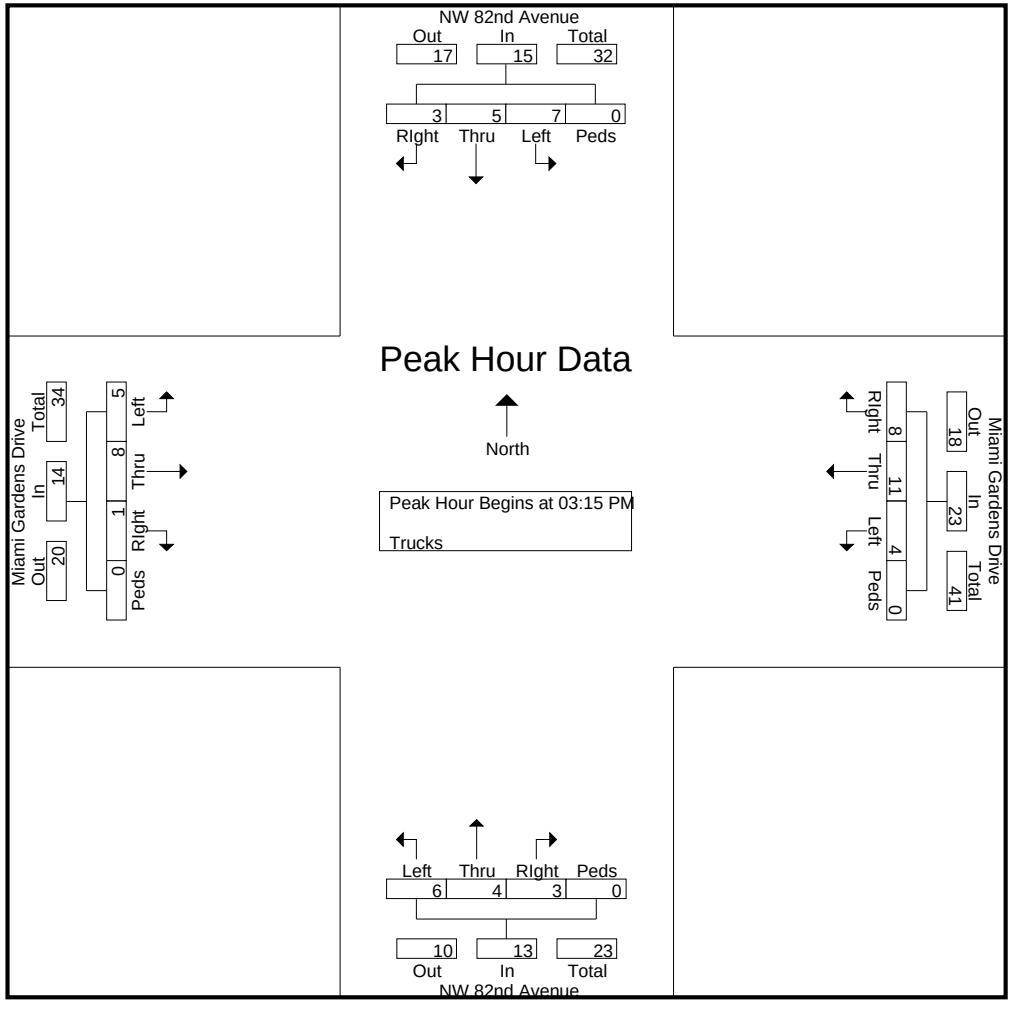

Miami Gardens Drive & NW 82nd Avenue

File Name : Miami Gardens Drive & NW 82nd Avenue
Site Code : 00000000
Start Date : 5/4/2016
Page No : 1

Groups Printed- Turns

	NW 82nd Avenue Southbound					NW 82nd Avenue Northbound					Miami Gardens Drive Westbound					Miami Gardens Drive Eastbound					
Start Time	Left	Thru	RIght	Peds/Bike	App. Total	Left	Thru	RIght	Peds/Bike	App. Total	Left	Thru	RIght	Peds/Bike	App. Total	Left	Thru	RIght	Peds/Bike	App. Total	Int. Total
06:00 AM	0	0	0	0	0	0	0	0	0	0	1	0	0	0	1	2	0	0	0	2	3
06:15 AM	0	0	0	0	0	0	0	0	0	0	1	0	0	0	1	1	0	0	0	1	2
06:30 AM	0	0	0	0	0	0	0	0	0	0	2	0	0	0	2	1	0	0	0	1	3
*** BREAK ***																					
Total	0	0	0	0	0	0	0	0	0	0	4	0	0	0	4	4	0	0	0	4	8
07:00 AM	0	0	0	0	0	0	0	0	0	0	1	0	0	0	1	4	0	0	0	4	5
07:15 AM	0	0	0	0	0	0	0	0	0	0	0	0	0	0	0	8	0	0	0	8	8
07:30 AM	0	0	0	0	0	0	0	0	0	0	1	0	0	0	1	20	0	0	0	20	21
07:45 AM	0	0	0	0	0	1	0	0	0	1	3	0	0	0	3	10	0	0	0	10	14
Total	0	0	0	0	0	1	0	0	0	1	5	0	0	0	5	42	0	0	0	42	48
08:00 AM	0	0	0	0	0	0	0	0	0	0	3	0	0	0	3	9	0	0	0	9	12
08:15 AM	0	0	0	0	0	0	0	0	0	0	2	0	0	0	2	5	0	0	0	5	7
08:30 AM	0	0	0	0	0	0	0	0	0	0	0	0	0	0	0	5	0	0	0	5	5
08:45 AM	0	0	0	0	0	0	0	0	0	0	3	0	0	0	3	2	0	0	0	2	5
Total	0	0	0	0	0	0	0	0	0	0	8	0	0	0	8	21	0	0	0	21	29
*** BREAK ***																					
03:00 PM	0	0	0	0	0	0	0	0	0	0	2	0	0	0	2	11	0	0	0	11	13
03:15 PM	0	0	0	0	0	0	0	0	0	0	0	0	0	0	0	6	0	0	0	6	6
03:30 PM	0	0	0	0	0	0	0	0	0	0	1	0	0	0	1	8	0	0	0	8	9
03:45 PM	0	0	0	0	0	0	0	0	0	0	1	0	0	0	1	2	0	0	0	2	3
Total	0	0	0	0	0	0	0	0	0	0	4	0	0	0	4	27	0	0	0	27	31
04:00 PM	0	0	0	0	0	0	0	0	0	0	2	0	0	0	2	3	0	0	0	3	5
04:15 PM	0	0	0	0	0	0	0	0	0	0	0	0	0	0	0	2	0	0	0	2	2
04:30 PM	0	0	0	0	0	0	0	0	0	0	0	0	0	0	0	4	0	0	0	4	4
04:45 PM	0	0	0	0	0	0	0	0	0	0	0	0	0	0	0	9	0	0	0	9	9
Total	0	0	0	0	0	0	0	0	0	0	2	0	0	0	2	18	0	0	0	18	20
05:00 PM	0	0	0	0	0	0	0	0	0	0	1	0	0	0	1	7	0	0	0	7	8
05:15 PM	1	0	0	0	1	0	0	0	0	0	2	0	0	0	2	5	0	0	0	5	8
05:30 PM	0	0	0	0	0	0	0	0	0	0	0	0	0	0	0	13	0	0	0	13	13
05:45 PM	0	0	0	0	0	0	0	0	0	0	0	0	0	0	0	7	0	0	0	7	7
Total	1	0	0	0	1	0	0	0	0	0	3	0	0	0	3	32	0	0	0	32	36
06:00 PM	0	0	0	0	0	0	0	0	0	0	0	0	0	0	0	14	0	0	0	14	14
06:15 PM	0	0	0	0	0	0	0	0	0	0	0	0	0	0	0	34	0	0	0	34	34
06:30 PM	0	0	0	0	0	0	0	0	0	0	1	0	0	0	1	20	0	0	0	20	21
06:45 PM	0	0	0	0	0	0	0	0	0	0	2	0	0	0	2	20	0	0	0	20	22
Total	0	0	0	0	0	0	0	0	0	0	3	0	0	0	3	88	0	0	0	88	91
Grand Total	1	0	0	0	1	1	0	0	0	1	29	0	0	0	29	232	0	0	0	232	263
Apprch %	100	0	0	0		100	0	0	0		100	0	0	0		100	0	0	0		
Total %	0.4	0	0	0	0.4	0.4	0	0	0	0.4	11	0	0	0	11	88.2	0	0	0	88.2	

Miami Gardens Drive & NW 82nd Avenue

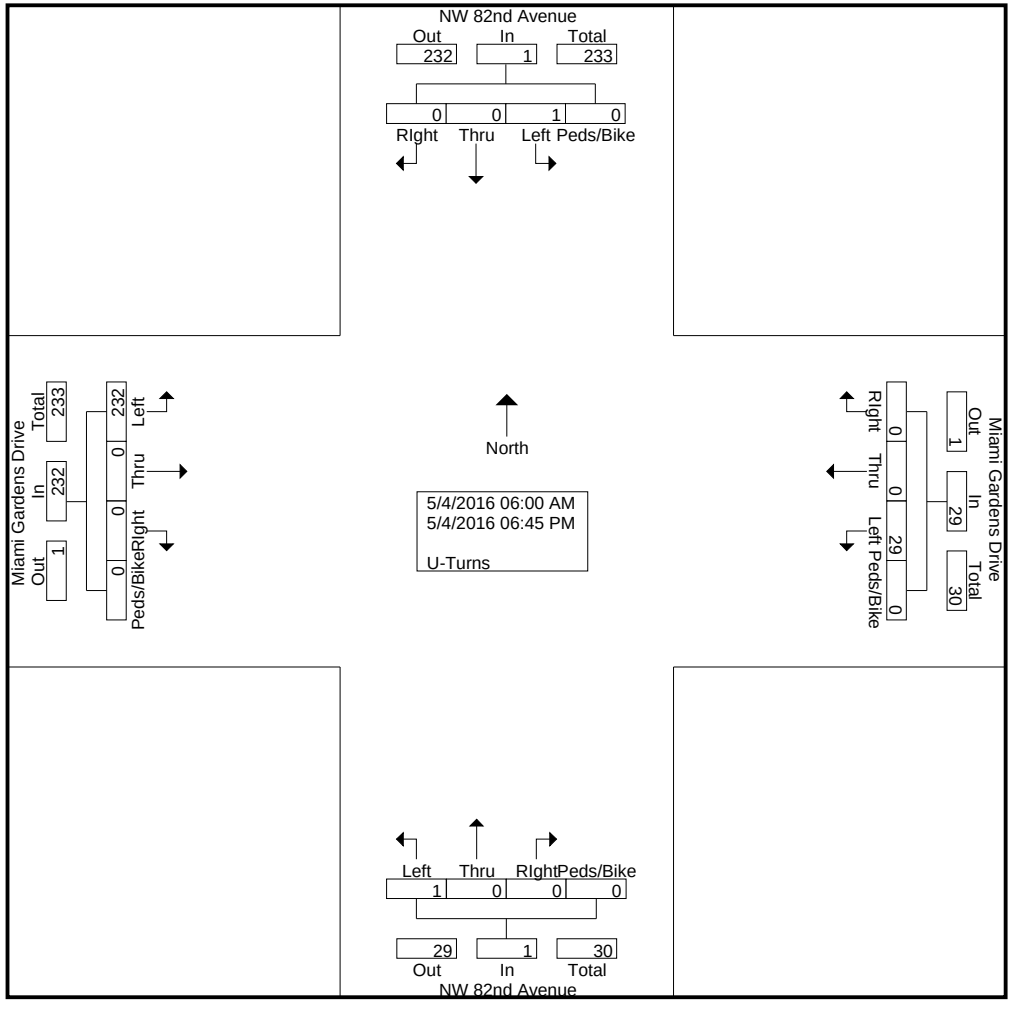

Miami Gardens Drive & NW 82nd Avenue

File Name : Miami Gardens Drive & NW 82nd Avenue
Site Code : 00000000
Start Date : 5/4/2016
Page No : 3

	NW 82nd Avenue Southbound					NW 82nd Avenue Northbound					Miami Gardens Drive Westbound					Miami Gardens Drive Eastbound					
Start Time	Left	Thru	RIght	Peds/Bike	App. Total	Left	Thru	RIght	Peds/Bike	App. Total	Left	Thru	RIght	Peds/Bike	App. Total	Left	Thru	RIght	Peds/Bike	App. Total	Int. Total
Peak Hour Analysis From 06:00 AM to 08:45 AM - Peak 1 of 1																					
Peak Hour for Entire Intersection Begins at 07:15 AM																					
07:15 AM	0	0	0	0	0	0	0	0	0	0	0	0	0	0	0	8	0	0	0	8	8
07:30 AM	0	0	0	0	0	0	0	0	0	0	1	0	0	0	1	**20**	0	0	0	**20**	**21**
07:45 AM	0	0	0	0	0	**1**	0	0	0	**1**	**3**	0	0	0	**3**	10	0	0	0	10	14
08:00 AM	0	0	0	0	0	0	0	0	0	0	3	0	0	0	3	9	0	0	0	9	12
Total Volume	0	0	0	0	0	1	0	0	0	1	7	0	0	0	7	47	0	0	0	47	55
% App. Total	0	0	0	0		100	0	0	0		100	0	0	0		100	0	0	0		
PHF	.000	.000	.000	.000	.000	.250	.000	.000	.000	.250	.583	.000	.000	.000	.583	.588	.000	.000	.000	.588	.655

Miami Gardens Drive & NW 82nd Avenue

File Name : Miami Gardens Drive & NW 82nd Avenue
Site Code : 00000000
Start Date : 5/4/2016
Page No : 4

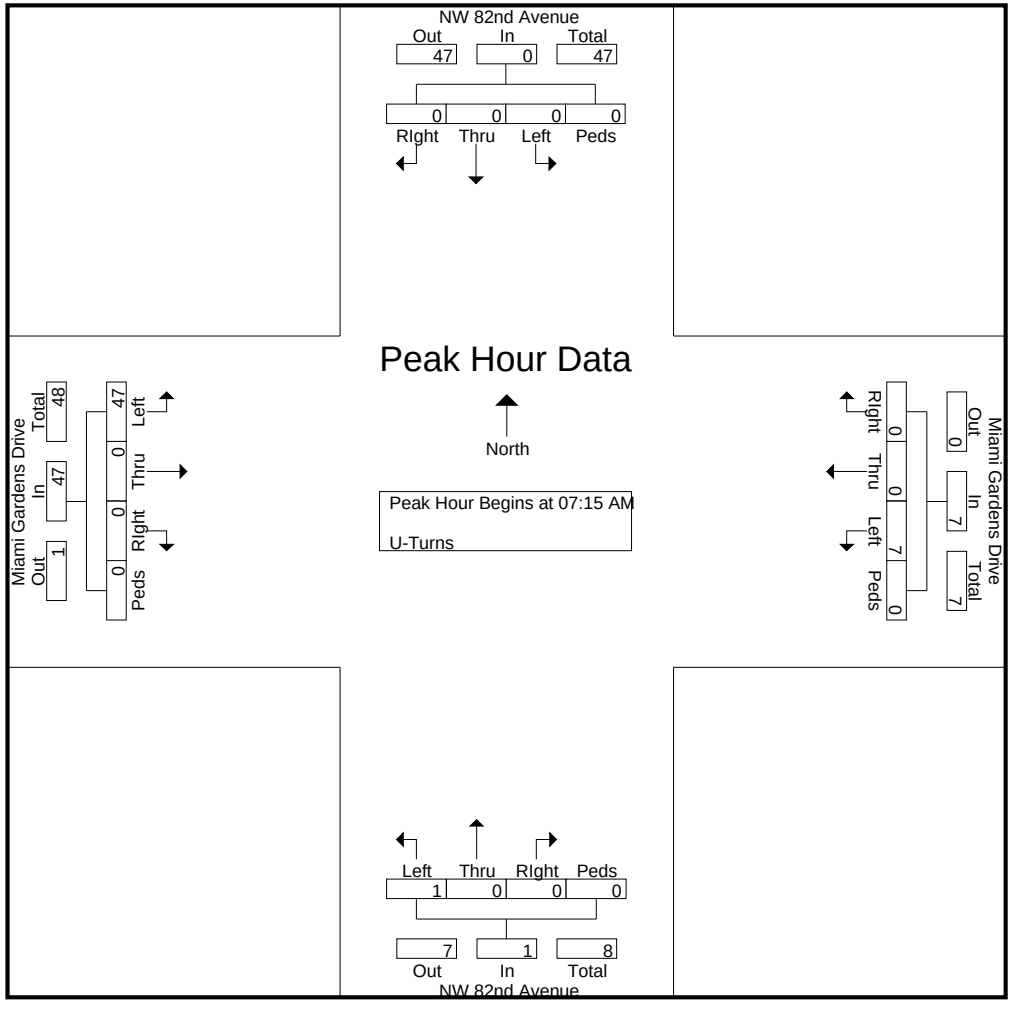

Miami Gardens Drive & NW 82nd Avenue

File Name : Miami Gardens Drive & NW 82nd Avenue
Site Code : 00000000
Start Date : 5/4/2016
Page No : 5

	NW 82nd Avenue Southbound					NW 82nd Avenue Northbound					Miami Gardens Drive Westbound					Miami Gardens Drive Eastbound					
Start Time	Left	Thru	RIght	Peds/Bike	App. Total	Left	Thru	RIght	Peds/Bike	App. Total	Left	Thru	RIght	Peds/Bike	App. Total	Left	Thru	RIght	Peds/Bike	App. Total	Int. Total
Peak Hour Analysis From 03:00 PM to 06:45 PM - Peak 1 of 1																					
Peak Hour for Entire Intersection Begins at 06:00 PM																					
06:00 PM	0	0	0	0	0	0	0	0	0	0	0	0	0	0	0	14	0	0	0	14	14
06:15 PM	0	0	0	0	0	0	0	0	0	0	0	0	0	0	0	**34**	0	0	0	**34**	**34**
06:30 PM	0	0	0	0	0	0	0	0	0	0	1	0	0	0	1	20	0	0	0	20	21
06:45 PM	0	0	0	0	0	0	0	0	0	0	**2**	0	0	0	**2**	20	0	0	0	20	22
Total Volume	0	0	0	0	0	0	0	0	0	0	3	0	0	0	3	88	0	0	0	88	91
% App. Total	0	0	0	0		0	0	0	0		100	0	0	0		100	0	0	0		
PHF	.000	.000	.000	.000	.000	.000	.000	.000	.000	.000	.375	.000	.000	.000	.375	.647	.000	.000	.000	.647	.669

Miami Gardens Drive & NW 82nd Avenue

File Name : Miami Gardens Drive & NW 82nd Avenue
Site Code : 00000000
Start Date : 5/4/2016
Page No : 6

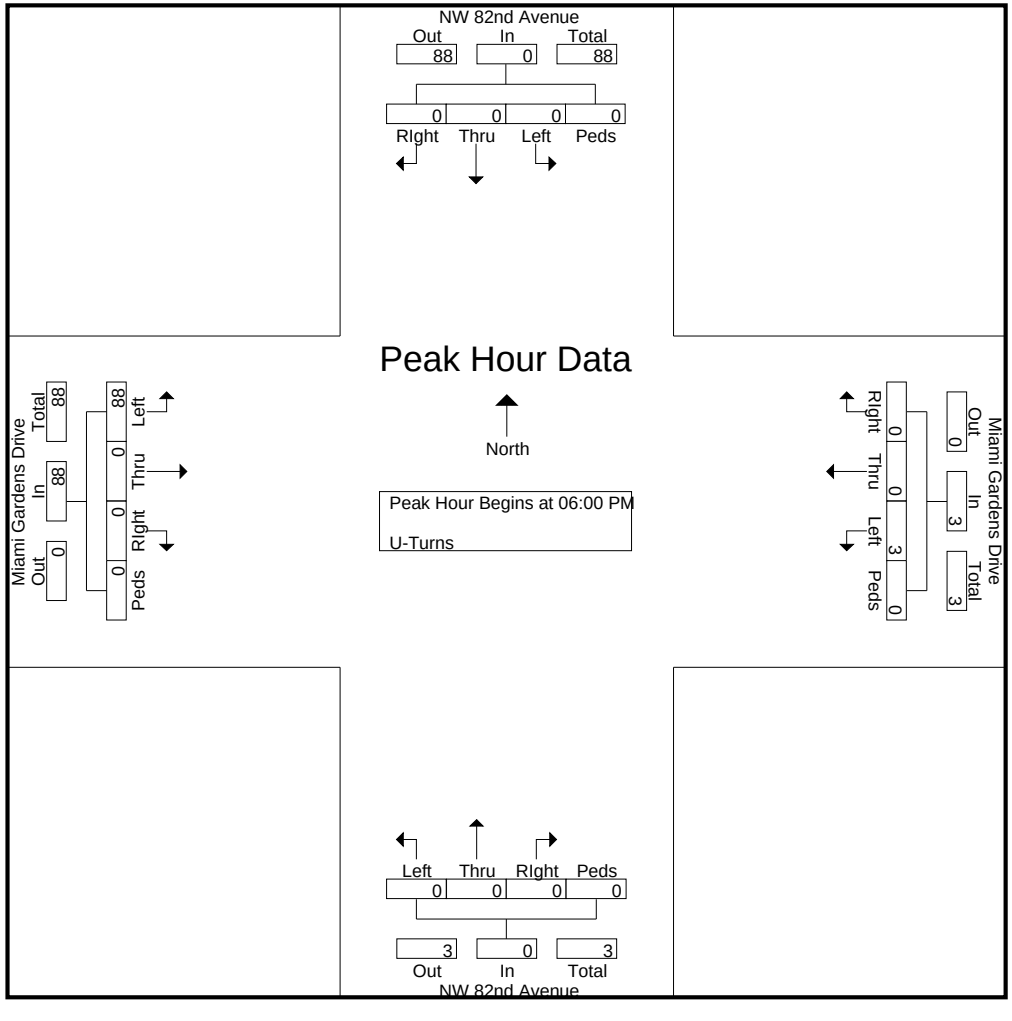

Miami Gardens Drive & NW 82nd Avenue

File Name : Miami Gardens Drive & NW 82nd Avenue
Site Code : 00000000
Start Date : 5/4/2016
Page No : 1

Groups Printed- Veh - Trucks - Turns

	NW 82nd Avenue Southbound					NW 82nd Avenue Northbound					Miami Gardens Drive Westbound					Miami Gardens Drive Eastbound					
Start Time	Left	Thru	RIght	Peds/Bike	App. Total	Left	Thru	RIght	Peds/Bike	App. Total	Left	Thru	RIght	Peds/Bike	App. Total	Left	Thru	RIght	Peds/Bike	App. Total	Int. Total
06:00 AM	20	8	17	2	47	10	5	6	0	21	4	106	2	0	112	9	45	2	0	56	236
06:15 AM	19	6	28	0	53	16	1	8	0	25	16	215	9	0	240	6	60	5	0	71	389
06:30 AM	29	13	19	0	61	41	2	13	0	56	21	314	13	0	348	6	93	8	0	107	572
06:45 AM	46	39	37	0	122	44	3	19	0	66	54	383	13	0	450	6	123	15	0	144	782
Total	114	66	101	2	283	111	11	46	0	168	95	1018	37	0	1150	27	321	30	0	378	1979
07:00 AM	54	48	47	0	149	70	6	14	0	90	79	343	14	0	436	14	114	28	0	156	831
07:15 AM	45	42	43	0	130	56	9	21	0	86	83	425	13	0	521	19	125	27	1	172	909
07:30 AM	35	33	53	0	121	100	17	32	0	149	44	328	31	0	403	34	145	22	0	201	874
07:45 AM	21	55	29	1	106	77	21	22	0	120	58	387	40	0	485	26	116	29	1	172	883
Total	155	178	172	1	506	303	53	89	0	445	264	1483	98	0	1845	93	500	106	2	701	3497
08:00 AM	29	68	57	0	154	61	32	26	1	120	71	342	55	0	468	30	104	37	0	171	913
08:15 AM	54	46	41	0	141	62	33	30	0	125	61	288	67	2	418	25	119	37	0	181	865
08:30 AM	58	60	59	0	177	64	33	27	1	125	41	264	64	0	369	22	97	42	3	164	835
08:45 AM	72	51	29	0	152	43	15	12	0	70	46	275	44	1	366	12	126	30	0	168	756
Total	213	225	186	0	624	230	113	95	2	440	219	1169	230	3	1621	89	446	146	3	684	3369
*** BREAK ***																					
03:00 PM	23	12	12	0	47	33	21	25	1	80	33	135	31	0	199	43	168	26	0	237	563
03:15 PM	13	16	12	0	41	27	17	20	0	64	32	180	53	0	265	28	166	32	0	226	596
03:30 PM	20	17	15	0	52	29	25	37	1	92	42	190	50	0	282	38	219	25	0	282	708
03:45 PM	68	40	22	1	131	34	25	36	1	96	29	160	54	0	243	25	214	30	0	269	739
Total	124	85	61	1	271	123	88	118	3	332	136	665	188	0	989	134	767	113	0	1014	2606
04:00 PM	56	34	34	1	125	36	28	35	0	99	38	149	28	2	217	35	229	29	0	293	734
04:15 PM	28	13	11	0	52	38	16	34	2	90	25	186	25	1	237	28	272	49	0	349	728
04:30 PM	25	18	13	1	57	27	20	27	0	74	23	174	30	0	227	39	238	28	0	305	663
04:45 PM	26	12	8	0	46	26	19	27	0	72	29	157	37	0	223	42	270	43	0	355	696
Total	135	77	66	2	280	127	83	123	2	335	115	666	120	3	904	144	1009	149	0	1302	2821
05:00 PM	30	9	15	0	54	41	16	34	0	91	33	182	32	0	247	37	292	43	0	372	764
05:15 PM	29	18	13	0	60	50	25	44	0	119	29	196	27	0	252	31	349	37	0	417	848
05:30 PM	22	15	22	3	62	26	30	44	0	100	36	188	40	0	264	52	343	41	0	436	862
05:45 PM	35	15	16	0	66	47	20	36	0	103	36	166	38	0	240	37	327	31	0	395	804
Total	116	57	66	3	242	164	91	158	0	413	134	732	137	0	1003	157	1311	152	0	1620	3278
06:00 PM	24	19	11	0	54	43	28	52	0	123	31	184	27	0	242	37	300	68	2	407	826
06:15 PM	31	11	23	0	65	61	20	39	1	121	30	190	41	0	261	74	331	30	0	435	882
06:30 PM	43	6	24	2	75	35	20	31	3	89	32	186	34	0	252	49	373	31	0	453	869
06:45 PM	29	12	15	0	56	35	21	27	2	85	32	181	29	0	242	61	288	32	0	381	764
Total	127	48	73	2	250	174	89	149	6	418	125	741	131	0	997	221	1292	161	2	1676	3341
Grand Total	984	736	725	11	2456	1232	528	778	13	2551	1088	6474	941	6	8509	865	5646	857	7	7375	20891
Apprch %	40.1	30	29.5	0.4		48.3	20.7	30.5	0.5		12.8	76.1	11.1	0.1		11.7	76.6	11.6	0.1		
Total %	4.7	3.5	3.5	0.1	11.8	5.9	2.5	3.7	0.1	12.2	5.2	31	4.5	0	40.7	4.1	27	4.1	0	35.3	

Miami Gardens Drive & NW 82nd Avenue

File Name : Miami Gardens Drive & NW 82nd Avenue
Site Code : 00000000
Start Date : 5/4/2016
Page No : 2

Groups Printed- Veh - Trucks - Turns

	NW 82nd Avenue Southbound					NW 82nd Avenue Northbound					Miami Gardens Drive Westbound					Miami Gardens Drive Eastbound					
	Left	Thru	RIght	Peds/Bike	App. Total	Left	Thru	RIght	Peds/Bike	App. Total	Left	Thru	RIght	Peds/Bike	App. Total	Left	Thru	RIght	Peds/Bike	App. Total	Int. Total
Veh	946	714	717	6	2383	1214	518	767	7	2506	1046	6389	917	6	8358	615	5589	851	7	7062	20309
% Veh	96.1	97	98.9	54.5	97	98.5	98.1	98.6	53.8	98.2	96.1	98.7	97.4	100	98.2	71.1	99	99.3	100	95.8	97.2
Trucks	37	22	8	5	72	17	10	11	6	44	13	85	24	0	122	18	57	6	0	81	319
% Trucks	3.8	3	1.1	45.5	2.9	1.4	1.9	1.4	46.2	1.7	1.2	1.3	2.6	0	1.4	2.1	1	0.7	0	1.1	1.5
U-Turns	1	0	0	0	1	1	0	0	0	1	29	0	0	0	29	232	0	0	0	232	263
% U-Turns	0.1	0	0	0	0	0.1	0	0	0	0	2.7	0	0	0	0.3	26.8	0	0	0	3.1	1.3

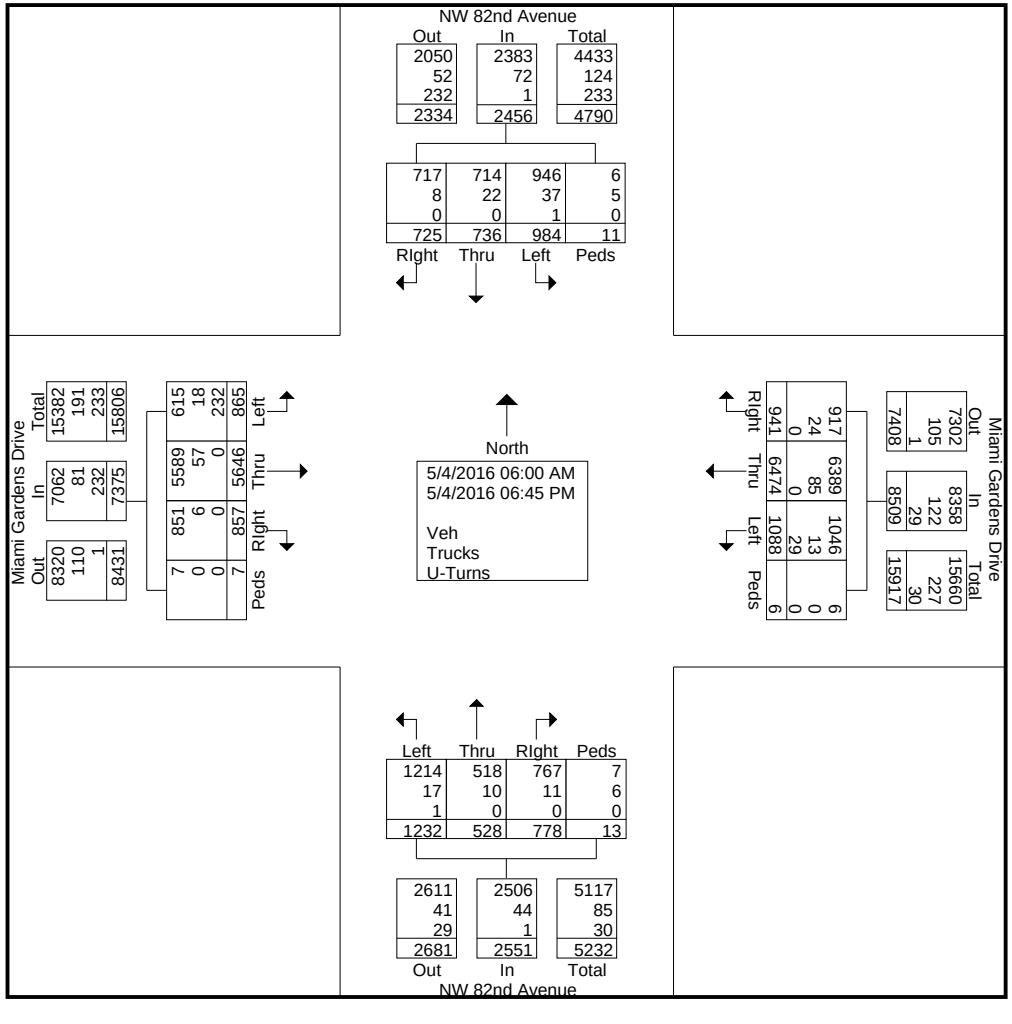

Miami Gardens Drive & NW 82nd Avenue

File Name : Miami Gardens Drive & NW 82nd Avenue
Site Code : 00000000
Start Date : 5/4/2016
Page No : 3

	NW 82nd Avenue Southbound					NW 82nd Avenue Northbound					Miami Gardens Drive Westbound					Miami Gardens Drive Eastbound					
Start Time	Left	Thru	RIght	Peds/Bike	App. Total	Left	Thru	RIght	Peds/Bike	App. Total	Left	Thru	RIght	Peds/Bike	App. Total	Left	Thru	RIght	Peds/Bike	App. Total	Int. Total
Peak Hour Analysis From 06:00 AM to 08:45 AM - Peak 1 of 1																					
Peak Hour for Entire Intersection Begins at 07:15 AM																					
07:15 AM	**45**	42	43	0	130	56	9	21	0	86	**83**	**425**	13	0	**521**	19	125	27	**1**	172	909
07:30 AM	35	33	53	0	121	**100**	17	**32**	0	**149**	44	328	31	0	403	**34**	**145**	22	0	**201**	874
07:45 AM	21	55	29	**1**	106	77	21	22	0	120	58	387	40	0	485	26	116	29	1	172	883
08:00 AM	29	**68**	**57**	0	**154**	61	**32**	26	**1**	120	71	342	**55**	0	468	30	104	**37**	0	171	**913**
Total Volume	130	198	182	1	511	294	79	101	1	475	256	1482	139	0	1877	109	490	115	2	716	3579
% App. Total	25.4	38.7	35.6	0.2		61.9	16.6	21.3	0.2		13.6	79	7.4	0		15.2	68.4	16.1	0.3		
PHF	.722	.728	.798	.250	.830	.735	.617	.789	.250	.797	.771	.872	.632	.000	.901	.801	.845	.777	.500	.891	.980

Miami Gardens Drive & NW 82nd Avenue

File Name : Miami Gardens Drive & NW 82nd Avenue
Site Code : 00000000
Start Date : 5/4/2016
Page No : 4

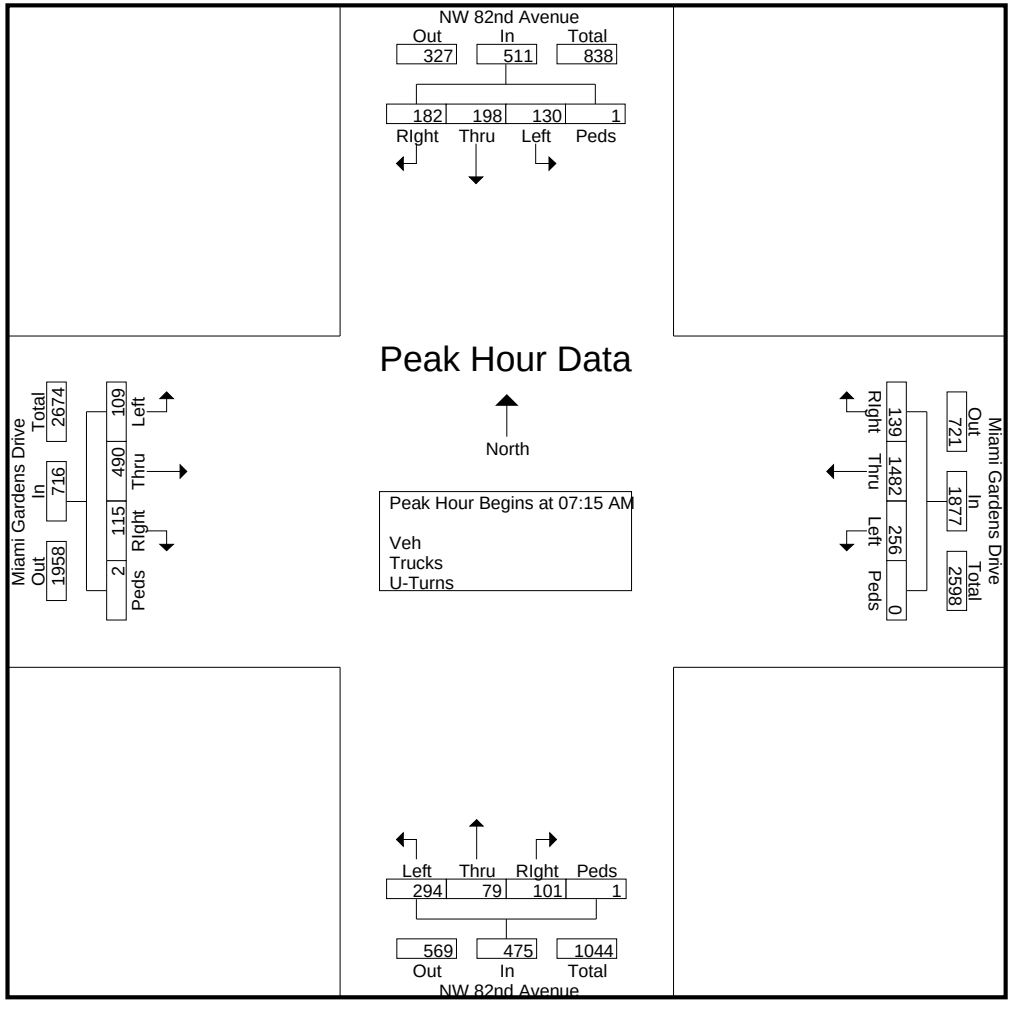

Miami Gardens Drive & NW 82nd Avenue

File Name : Miami Gardens Drive & NW 82nd Avenue
Site Code : 00000000
Start Date : 5/4/2016
Page No : 5

	NW 82nd Avenue Southbound					NW 82nd Avenue Northbound					Miami Gardens Drive Westbound					Miami Gardens Drive Eastbound					
Start Time	Left	Thru	RIght	Peds/Bike	App. Total	Left	Thru	RIght	Peds/Bike	App. Total	Left	Thru	RIght	Peds/Bike	App. Total	Left	Thru	RIght	Peds/Bike	App. Total	Int. Total
Peak Hour Analysis From 03:00 PM to 06:45 PM - Peak 1 of 1																					
Peak Hour for Entire Intersection Begins at 05:45 PM																					
05:45 PM	35	15	16	0	66	47	20	36	0	103	**36**	166	38	0	240	37	327	31	0	395	804
06:00 PM	24	**19**	11	0	54	43	**28**	**52**	0	**123**	31	184	27	0	242	37	300	**68**	**2**	407	826
06:15 PM	31	11	23	0	65	**61**	20	39	1	121	30	**190**	**41**	0	**261**	**74**	331	30	0	435	**882**
06:30 PM	**43**	6	**24**	**2**	**75**	35	20	31	**3**	89	32	186	34	0	252	49	**373**	31	0	**453**	869
Total Volume	133	51	74	2	260	186	88	158	4	436	129	726	140	0	995	197	1331	160	2	1690	3381
% App. Total	51.2	19.6	28.5	0.8		42.7	20.2	36.2	0.9		13	73	14.1	0		11.7	78.8	9.5	0.1		
PHF	.773	.671	.771	.250	.867	.762	.786	.760	.333	.886	.896	.955	.854	.000	.953	.666	.892	.588	.250	.933	.958

Miami Gardens Drive & NW 82nd Avenue

File Name : Miami Gardens Drive & NW 82nd Avenue
Site Code : 00000000
Start Date : 5/4/2016
Page No : 6

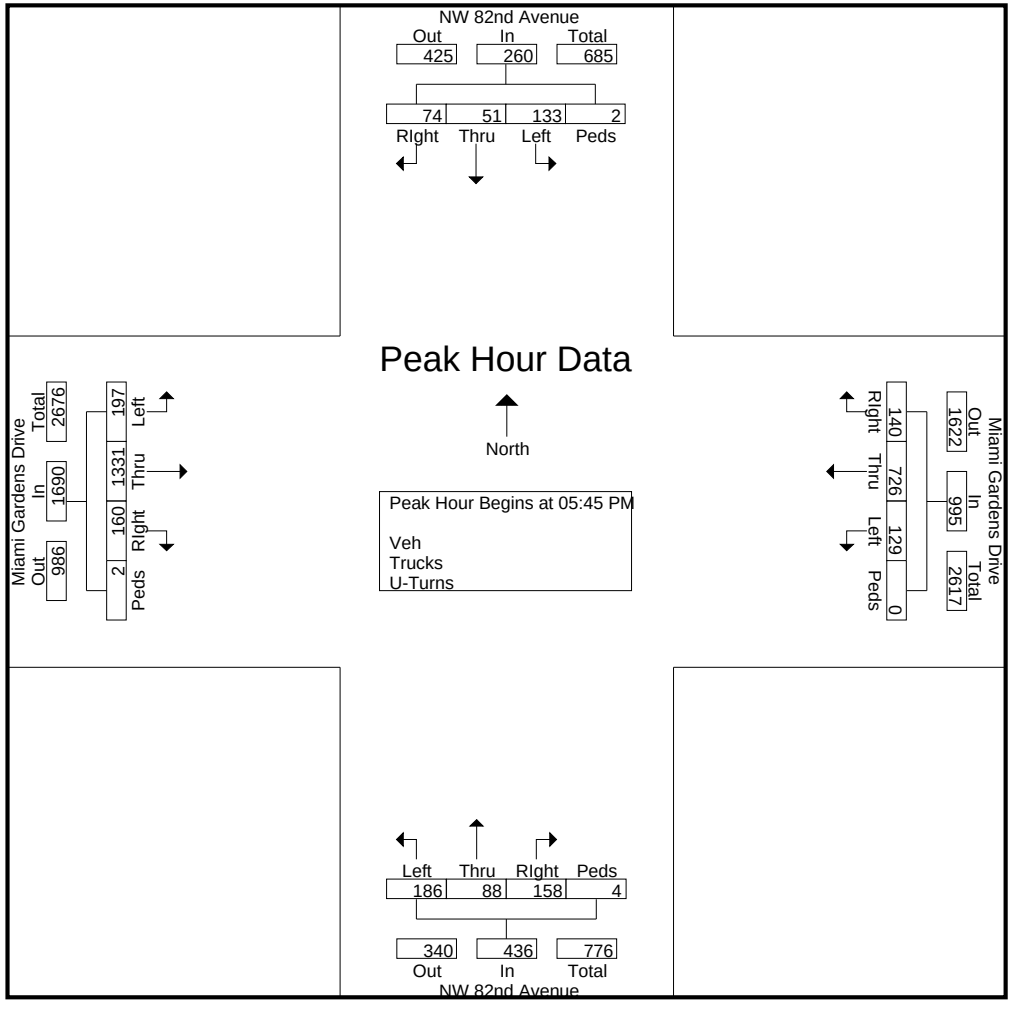

Miami Gardens Drive & NW 79th Avenue

File Name : Miami Gardens Drive & NW 79th Avenue
Site Code : 00000000
Start Date : 5/4/2016
Page No : 1

Groups Printed- Trucks

	NW 79th Avenue Southbound					NW 79th Avenue Northbound					Miami Gardens Drive Westbound					Miami Gardens Drive Eastbound					
Start Time	Left	Thru	RIght	Bikes	App. Total	Left	Thru	RIght	Bikes	App. Total	Left	Thru	RIght	Bikes	App. Total	Left	Thru	RIght	Bikes	App. Total	Int. Total
06:00 AM	0	0	0	0	0	0	0	0	0	0	0	4	2	0	6	0	5	0	0	5	11
06:15 AM	3	0	0	0	3	0	0	0	0	0	0	7	3	0	10	0	5	0	0	5	18
06:30 AM	0	0	1	0	1	0	0	0	0	0	0	7	5	0	12	0	7	0	0	7	20
06:45 AM	4	0	0	0	4	0	0	0	0	0	0	0	0	0	0	1	10	0	0	11	15
Total	7	0	1	0	8	0	0	0	0	0	0	18	10	0	28	1	27	0	0	28	64
07:00 AM	0	0	0	1	1	0	0	0	0	0	0	4	0	0	4	0	2	0	0	2	7
07:15 AM	0	0	1	0	1	0	0	0	0	0	0	4	1	0	5	0	4	0	0	4	10
07:30 AM	0	0	0	0	0	0	0	0	0	0	0	5	3	0	8	0	3	0	0	3	11
07:45 AM	3	0	0	1	4	0	0	0	0	0	0	2	5	0	7	1	1	0	0	2	13
Total	3	0	1	2	6	0	0	0	0	0	0	15	9	0	24	1	10	0	0	11	41
08:00 AM	8	0	2	0	10	0	0	0	0	0	0	3	4	0	7	0	2	0	0	2	19
08:15 AM	2	0	1	0	3	0	0	0	0	0	0	6	0	0	6	0	2	0	0	2	11
08:30 AM	0	0	0	0	0	0	0	0	0	0	0	8	1	0	9	0	4	0	0	4	13
08:45 AM	2	0	0	0	2	0	0	0	0	0	0	4	0	0	4	0	3	0	0	3	9
Total	12	0	3	0	15	0	0	0	0	0	0	21	5	0	26	0	11	0	0	11	52
*** BREAK ***																					
03:00 PM	4	0	0	0	4	0	0	0	0	0	0	6	3	0	9	0	2	0	0	2	15
03:15 PM	0	0	1	0	1	0	0	0	0	0	0	9	2	0	11	0	3	0	0	3	15
03:30 PM	2	0	0	0	2	0	0	0	0	0	0	8	0	0	8	0	4	0	0	4	14
03:45 PM	7	0	0	0	7	0	0	0	0	0	0	3	0	0	3	1	1	0	0	2	12
Total	13	0	1	0	14	0	0	0	0	0	0	26	5	0	31	1	10	0	0	11	56
04:00 PM	6	0	3	0	9	0	0	0	0	0	0	1	2	0	3	1	4	0	0	5	17
04:15 PM	1	0	0	0	1	0	0	0	0	0	0	5	0	0	5	0	5	0	0	5	11
04:30 PM	1	0	0	0	1	0	0	0	0	0	0	6	3	0	9	0	2	0	0	2	12
04:45 PM	1	0	1	0	2	0	0	0	0	0	0	3	1	1	5	0	2	0	0	2	9
Total	9	0	4	0	13	0	0	0	0	0	0	15	6	1	22	1	13	0	0	14	49
05:00 PM	0	0	0	0	0	0	0	0	0	0	0	2	0	0	2	0	2	0	0	2	4
05:15 PM	0	0	0	0	0	0	0	0	0	0	0	3	0	0	3	0	0	0	0	0	3
05:30 PM	0	0	0	2	2	0	0	0	0	0	0	3	0	0	3	0	1	0	0	1	6
05:45 PM	0	0	0	0	0	0	0	0	0	0	0	2	0	0	2	0	3	0	0	3	5
Total	0	0	0	2	2	0	0	0	0	0	0	10	0	0	10	0	6	0	0	6	18
06:00 PM	0	0	1	0	1	0	0	0	0	0	0	1	1	0	2	0	1	0	0	1	4
06:15 PM	0	0	0	0	0	0	0	0	0	0	0	0	0	0	0	1	1	0	0	2	2
06:30 PM	0	0	0	0	0	0	0	0	0	0	0	2	0	0	2	0	1	0	0	1	3
06:45 PM	0	0	0	1	1	0	0	0	0	0	0	5	0	0	5	0	0	0	0	0	6
Total	0	0	1	1	2	0	0	0	0	0	0	8	1	0	9	1	3	0	0	4	15
Grand Total	44	0	11	5	60	0	0	0	0	0	0	113	36	1	150	5	80	0	0	85	295
Apprch %	73.3	0	18.3	8.3		0	0	0	0		0	75.3	24	0.7		5.9	94.1	0	0		
Total %	14.9	0	3.7	1.7	20.3	0	0	0	0	0	0	38.3	12.2	0.3	50.8	1.7	27.1	0	0	28.8	

Miami Gardens Drive & NW 79th Avenue

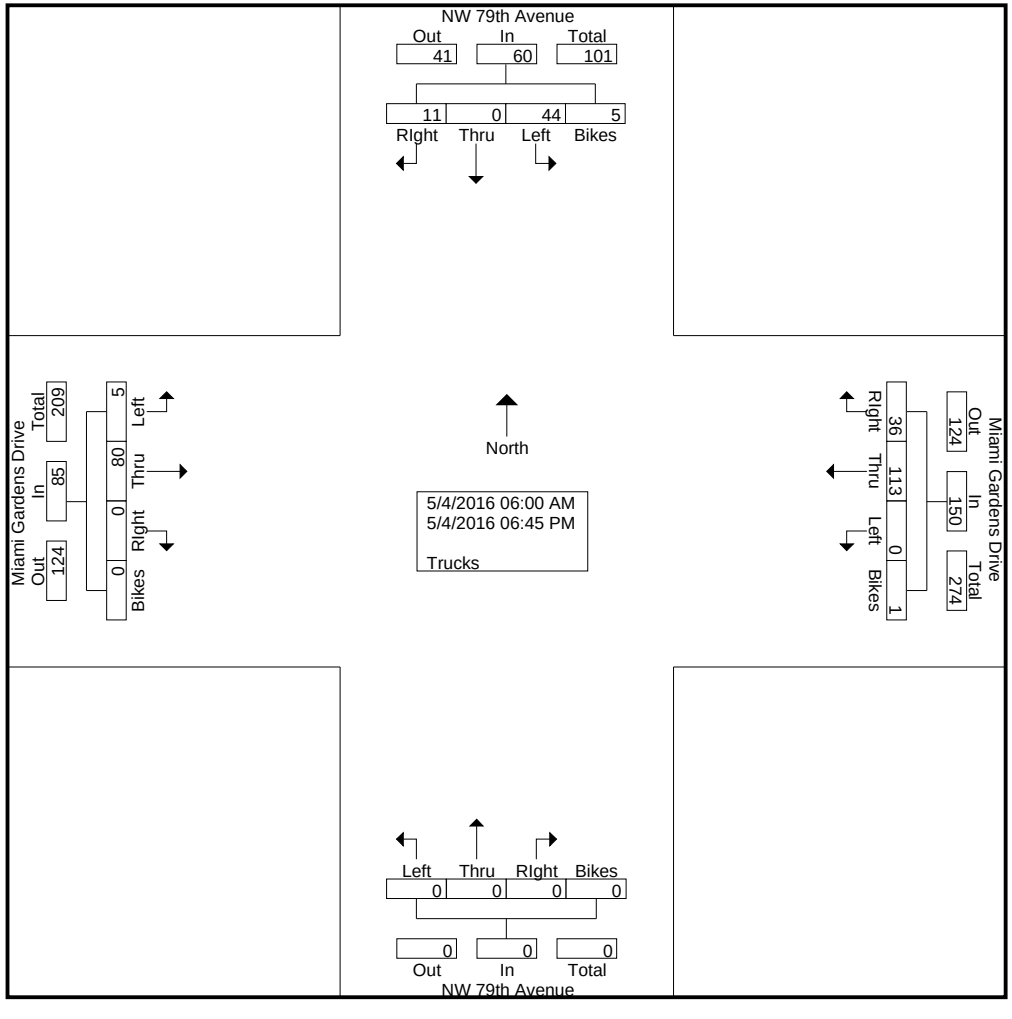

Miami Gardens Drive & NW 79th Avenue

File Name : Miami Gardens Drive & NW 79th Avenue
Site Code : 00000000
Start Date : 5/4/2016
Page No : 3

	NW 79th Avenue Southbound					NW 79th Avenue Northbound					Miami Gardens Drive Westbound					Miami Gardens Drive Eastbound					
Start Time	Left	Thru	RIght	Bikes	App. Total	Left	Thru	RIght	Bikes	App. Total	Left	Thru	RIght	Bikes	App. Total	Left	Thru	RIght	Bikes	App. Total	Int. Total
Peak Hour Analysis From 06:00 AM to 08:45 AM - Peak 1 of 1																					
Peak Hour for Entire Intersection Begins at 06:00 AM																					
06:00 AM	0	0	0	0	0	0	0	0	0	0	0	4	2	0	6	0	5	0	0	5	11
06:15 AM	3	0	0	0	3	0	0	0	0	0	0	**7**	3	0	10	0	5	0	0	5	18
06:30 AM	0	0	**1**	0	1	0	0	0	0	0	0	7	**5**	0	**12**	0	7	0	0	7	**20**
06:45 AM	**4**	0	0	0	**4**	0	0	0	0	0	0	0	0	0	0	**1**	**10**	0	0	**11**	15
Total Volume	7	0	1	0	8	0	0	0	0	0	0	18	10	0	28	1	27	0	0	28	64
% App. Total	87.5	0	12.5	0		0	0	0	0		0	64.3	35.7	0		3.6	96.4	0	0		
PHF	.438	.000	.250	.000	.500	.000	.000	.000	.000	.000	.000	.643	.500	.000	.583	.250	.675	.000	.000	.636	.800

Miami Gardens Drive & NW 79th Avenue

File Name : Miami Gardens Drive & NW 79th Avenue
Site Code : 00000000
Start Date : 5/4/2016
Page No : 4

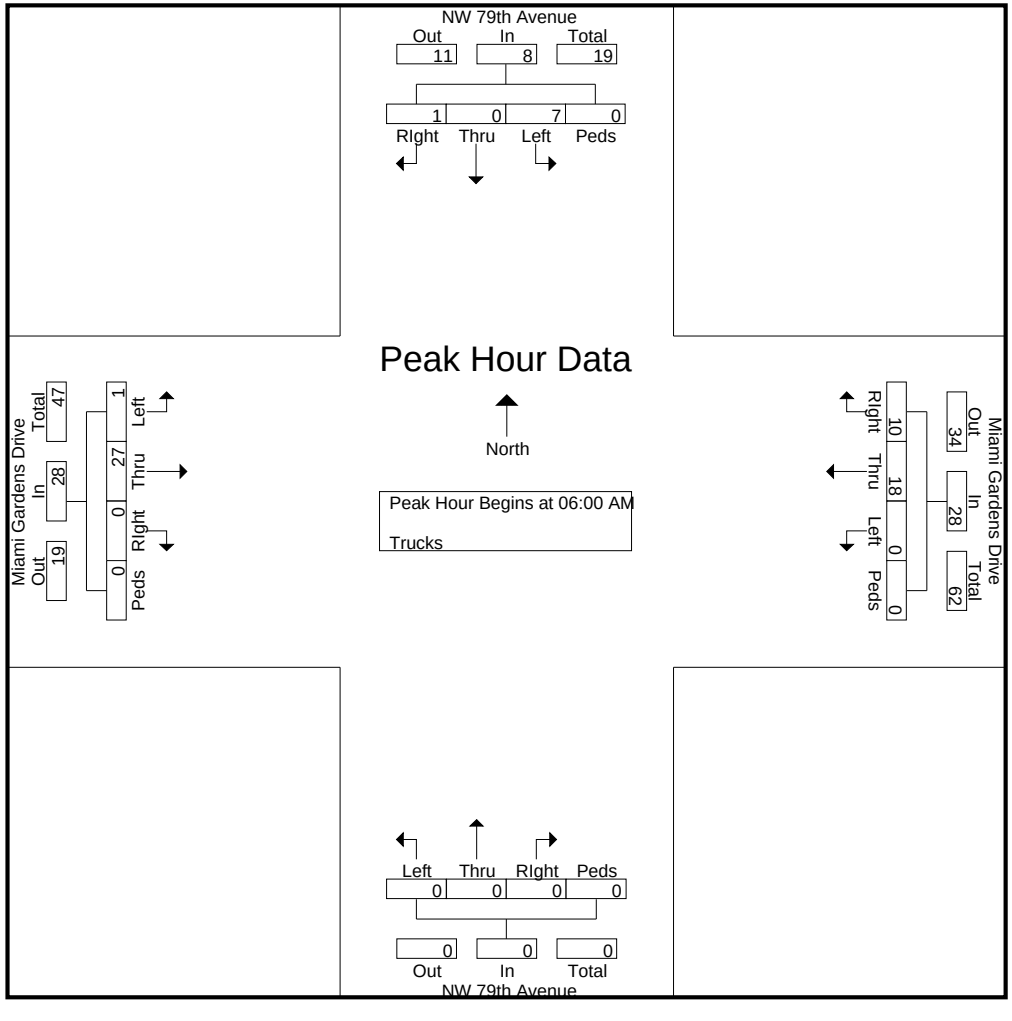

Miami Gardens Drive & NW 79th Avenue

File Name : Miami Gardens Drive & NW 79th Avenue
Site Code : 00000000
Start Date : 5/4/2016
Page No : 5

	NW 79th Avenue Southbound					NW 79th Avenue Northbound					Miami Gardens Drive Westbound					Miami Gardens Drive Eastbound					
Start Time	Left	Thru	RIght	Bikes	App. Total	Left	Thru	RIght	Bikes	App. Total	Left	Thru	RIght	Bikes	App. Total	Left	Thru	RIght	Bikes	App. Total	Int. Total
Peak Hour Analysis From 03:00 PM to 06:45 PM - Peak 1 of 1																					
Peak Hour for Entire Intersection Begins at 03:15 PM																					
03:15 PM	0	0	1	0	1	0	0	0	0	0	0	**9**	**2**	0	**11**	0	3	0	0	3	15
03:30 PM	2	0	0	0	2	0	0	0	0	0	0	8	0	0	8	0	**4**	0	0	4	14
03:45 PM	**7**	0	0	0	7	0	0	0	0	0	0	3	0	0	3	**1**	1	0	0	2	12
04:00 PM	6	0	**3**	0	**9**	0	0	0	0	0	0	1	2	0	3	1	4	0	0	**5**	**17**
Total Volume	15	0	4	0	19	0	0	0	0	0	0	21	4	0	25	2	12	0	0	14	58
% App. Total	78.9	0	21.1	0		0	0	0	0		0	84	16	0		14.3	85.7	0	0		
PHF	.536	.000	.333	.000	.528	.000	.000	.000	.000	.000	.000	.583	.500	.000	.568	.500	.750	.000	.000	.700	.853

Miami Gardens Drive & NW 79th Avenue

File Name : Miami Gardens Drive & NW 79th Avenue
Site Code : 00000000
Start Date : 5/4/2016
Page No : 6

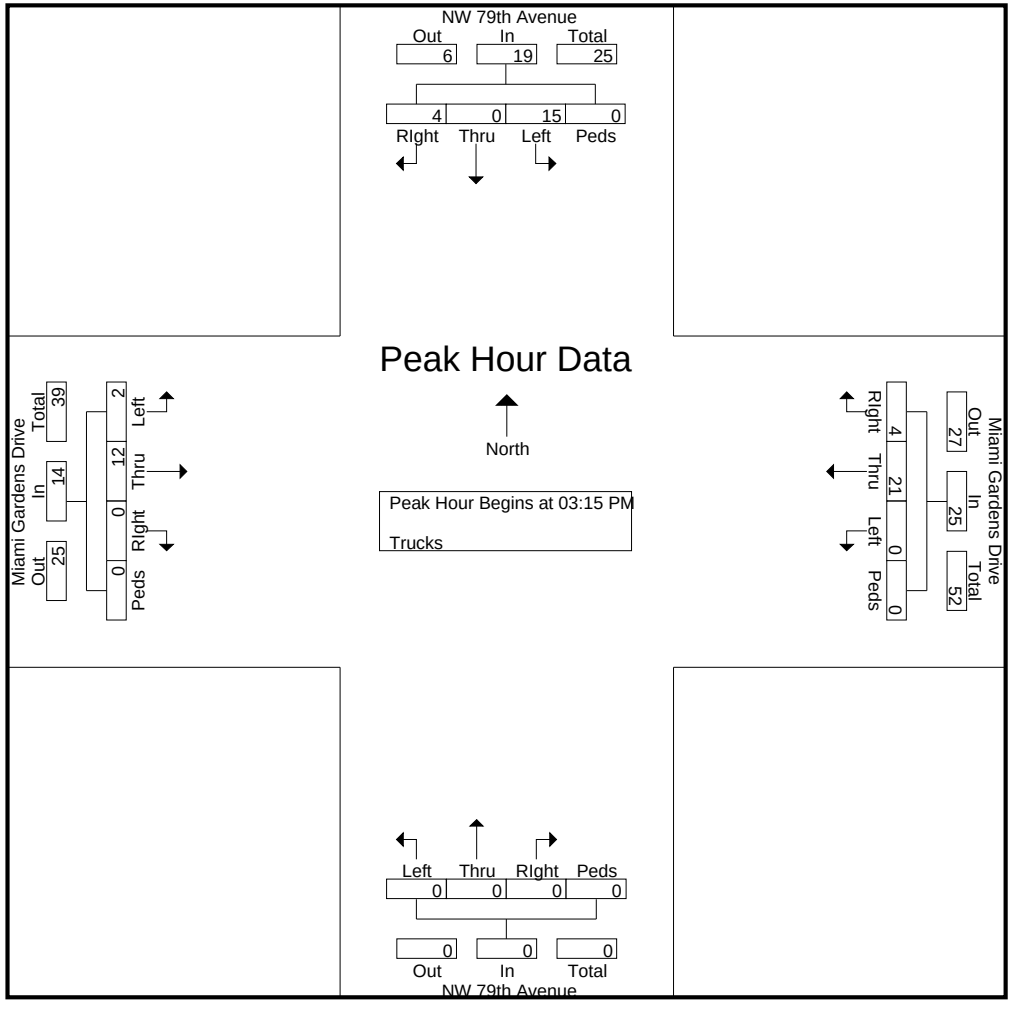

Miami Gardens Drive & NW 79th Avenue

File Name : Miami Gardens Drive & NW 79th Avenue
Site Code : 00000000
Start Date : 5/4/2016
Page No : 1

Groups Printed- Turns

	NW 79th Avenue Southbound					NW 79th Avenue Northbound					Miami Gardens Drive Westbound					Miami Gardens Drive Eastbound					
Start Time	Left	Thru	RIght	Peds/Bike	App. Total	Left	Thru	RIght	Peds/Bike	App. Total	Left	Thru	RIght	Peds/Bike	App. Total	Left	Thru	RIght	Peds/Bike	App. Total	Int. Total
06:00 AM	0	0	0	0	0	0	0	0	0	0	0	0	0	0	0	1	0	0	0	1	1
*** BREAK ***																					
06:45 AM	0	0	0	0	0	0	0	0	0	0	0	0	0	0	0	1	0	0	0	1	1
Total	0	0	0	0	0	0	0	0	0	0	0	0	0	0	0	2	0	0	0	2	2
07:00 AM	0	0	0	0	0	0	0	0	0	0	0	0	0	0	0	1	0	0	0	1	1
07:15 AM	1	0	0	0	1	0	0	0	0	0	0	0	0	0	0	1	0	0	0	1	2
07:30 AM	0	0	0	0	0	0	0	0	0	0	0	0	0	0	0	2	0	0	0	2	2
07:45 AM	1	0	0	0	1	0	0	0	0	0	0	0	0	0	0	0	0	0	0	0	1
Total	2	0	0	0	2	0	0	0	0	0	0	0	0	0	0	4	0	0	0	4	6
08:00 AM	0	0	0	0	0	0	0	0	0	0	0	0	0	0	0	3	0	0	0	3	3
*** BREAK ***																					
08:30 AM	0	0	0	0	0	0	0	0	0	0	0	0	0	0	0	1	0	0	0	1	1
08:45 AM	2	0	0	0	2	0	0	0	0	0	0	0	0	0	0	3	0	0	0	3	5
Total	2	0	0	0	2	0	0	0	0	0	0	0	0	0	0	7	0	0	0	7	9
*** BREAK ***																					
03:00 PM	0	0	0	0	0	0	0	0	0	0	0	0	0	0	0	5	0	0	0	5	5
*** BREAK ***																					
03:30 PM	0	0	0	0	0	0	0	0	0	0	0	0	0	0	0	2	0	0	0	2	2
03:45 PM	1	0	0	0	1	0	0	0	0	0	0	0	0	0	0	6	0	0	0	6	7
Total	1	0	0	0	1	0	0	0	0	0	0	0	0	0	0	13	0	0	0	13	14
04:00 PM	0	0	0	0	0	0	0	0	0	0	0	0	0	0	0	5	0	0	0	5	5
04:15 PM	0	0	0	0	0	0	0	0	0	0	0	0	0	0	0	3	0	0	0	3	3
04:30 PM	0	0	0	0	0	0	0	0	0	0	0	0	0	0	0	3	0	0	0	3	3
04:45 PM	0	0	0	0	0	0	0	0	0	0	0	0	0	0	0	2	0	0	0	2	2
Total	0	0	0	0	0	0	0	0	0	0	0	0	0	0	0	13	0	0	0	13	13
05:00 PM	0	0	0	0	0	0	0	0	0	0	0	0	0	0	0	2	0	0	0	2	2
05:15 PM	0	0	0	0	0	0	0	0	0	0	0	0	0	0	0	6	0	0	0	6	6
*** BREAK ***																					
05:45 PM	1	0	0	0	1	0	0	0	0	0	0	0	0	0	0	4	0	0	0	4	5
Total	1	0	0	0	1	0	0	0	0	0	0	0	0	0	0	12	0	0	0	12	13
06:00 PM	0	0	0	0	0	0	0	0	0	0	0	0	0	0	0	2	0	0	0	2	2
06:15 PM	0	0	0	0	0	0	0	0	0	0	0	0	0	0	0	3	0	0	0	3	3
06:30 PM	0	0	0	0	0	0	0	0	0	0	0	0	0	0	0	2	0	0	0	2	2
06:45 PM	0	0	0	0	0	0	0	0	0	0	0	0	0	0	0	8	0	0	0	8	8
Total	0	0	0	0	0	0	0	0	0	0	0	0	0	0	0	15	0	0	0	15	15
Grand Total	6	0	0	0	6	0	0	0	0	0	0	0	0	0	0	66	0	0	0	66	72
Apprch %	100	0	0	0		0	0	0	0		0	0	0	0		100	0	0	0		
Total %	8.3	0	0	0	8.3	0	0	0	0	0	0	0	0	0	0	91.7	0	0	0	91.7	

Miami Gardens Drive & NW 79th Avenue

File Name : Miami Gardens Drive & NW 79th Avenue
Site Code : 00000000
Start Date : 5/4/2016
Page No : 2

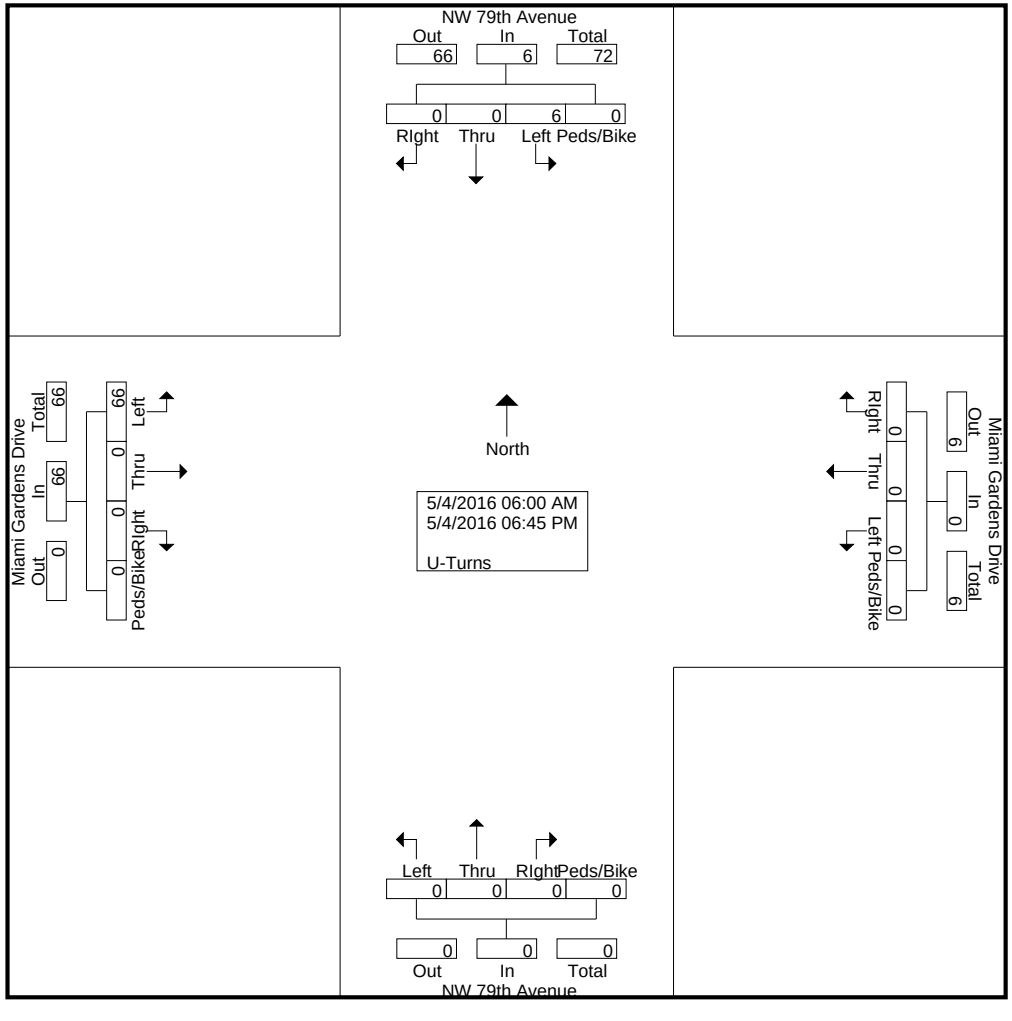

Miami Gardens Drive & NW 79th Avenue

File Name : Miami Gardens Drive & NW 79th Avenue
Site Code : 00000000
Start Date : 5/4/2016

	NW 79th Avenue Southbound					NW 79th Avenue Northbound					Miami Gardens Drive Westbound					Miami Gardens Drive Eastbound					
Start Time	Left	Thru	RIght	Peds/Bike	App. Total	Left	Thru	RIght	Peds/Bike	App. Total	Left	Thru	RIght	Peds/Bike	App. Total	Left	Thru	RIght	Peds/Bike	App. Total	Int. Total
Peak Hour Analysis From 06:00 AM to 08:45 AM - Peak 1 of 1																					
Peak Hour for Entire Intersection Begins at 08:00 AM																					
08:00 AM	0	0	0	0	0	0	0	0	0	0	0	0	0	0	0	**3**	0	0	0	**3**	3
08:15 AM	0	0	0	0	0	0	0	0	0	0	0	0	0	0	0	0	0	0	0	0	0
08:30 AM	0	0	0	0	0	0	0	0	0	0	0	0	0	0	0	1	0	0	0	1	1
08:45 AM	**2**	0	0	0	**2**	0	0	0	0	0	0	0	0	0	0	3	0	0	0	3	**5**
Total Volume	2	0	0	0	2	0	0	0	0	0	0	0	0	0	0	7	0	0	0	7	9
% App. Total	100	0	0	0		0	0	0	0		0	0	0	0		100	0	0	0		
PHF	.250	.000	.000	.000	.250	.000	.000	.000	.000	.000	.000	.000	.000	.000	.000	.583	.000	.000	.000	.583	.450

Miami Gardens Drive & NW 79th Avenue

File Name : Miami Gardens Drive & NW 79th Avenue
Site Code : 00000000
Start Date : 5/4/2016
Page No : 4

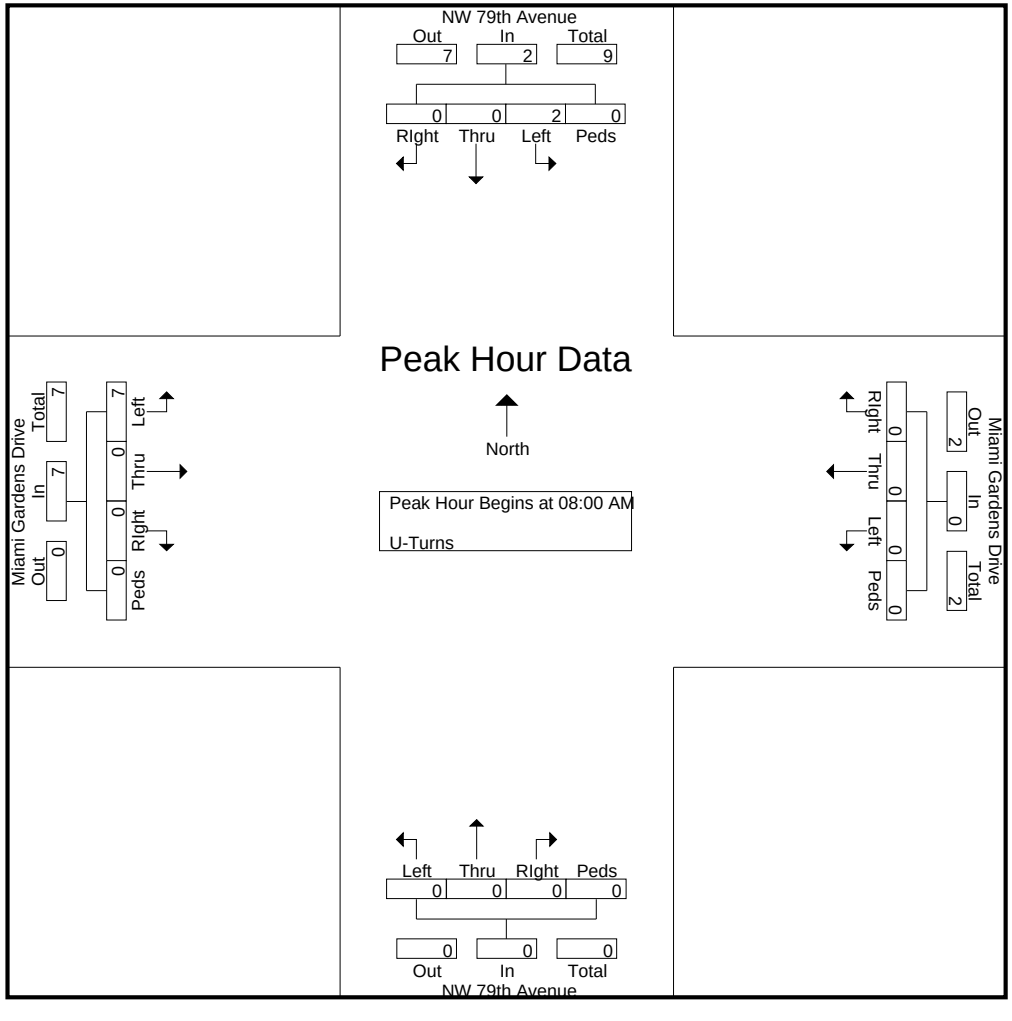

Miami Gardens Drive & NW 79th Avenue

File Name : Miami Gardens Drive & NW 79th Avenue
Site Code : 00000000
Start Date : 5/4/2016
Page No : 5

	NW 79th Avenue Southbound					NW 79th Avenue Northbound					Miami Gardens Drive Westbound					Miami Gardens Drive Eastbound					
Start Time	Left	Thru	RIght	Peds/Bike	App. Total	Left	Thru	RIght	Peds/Bike	App. Total	Left	Thru	RIght	Peds/Bike	App. Total	Left	Thru	RIght	Peds/Bike	App. Total	Int. Total
Peak Hour Analysis From 03:00 PM to 06:45 PM - Peak 1 of 1																					
Peak Hour for Entire Intersection Begins at 03:45 PM																					
03:45 PM	**1**	0	0	0	**1**	0	0	0	0	0	0	0	0	0	0	**6**	0	0	0	**6**	**7**
04:00 PM	0	0	0	0	0	0	0	0	0	0	0	0	0	0	0	5	0	0	0	5	5
04:15 PM	0	0	0	0	0	0	0	0	0	0	0	0	0	0	0	3	0	0	0	3	3
04:30 PM	0	0	0	0	0	0	0	0	0	0	0	0	0	0	0	3	0	0	0	3	3
Total Volume	1	0	0	0	1	0	0	0	0	0	0	0	0	0	0	17	0	0	0	17	18
% App. Total	100	0	0	0		0	0	0	0		0	0	0	0		100	0	0	0		
PHF	.250	.000	.000	.000	.250	.000	.000	.000	.000	.000	.000	.000	.000	.000	.000	.708	.000	.000	.000	.708	.643

Miami Gardens Drive & NW 79th Avenue

File Name : Miami Gardens Drive & NW 79th Avenue
Site Code : 00000000
Start Date : 5/4/2016
Page No : 6

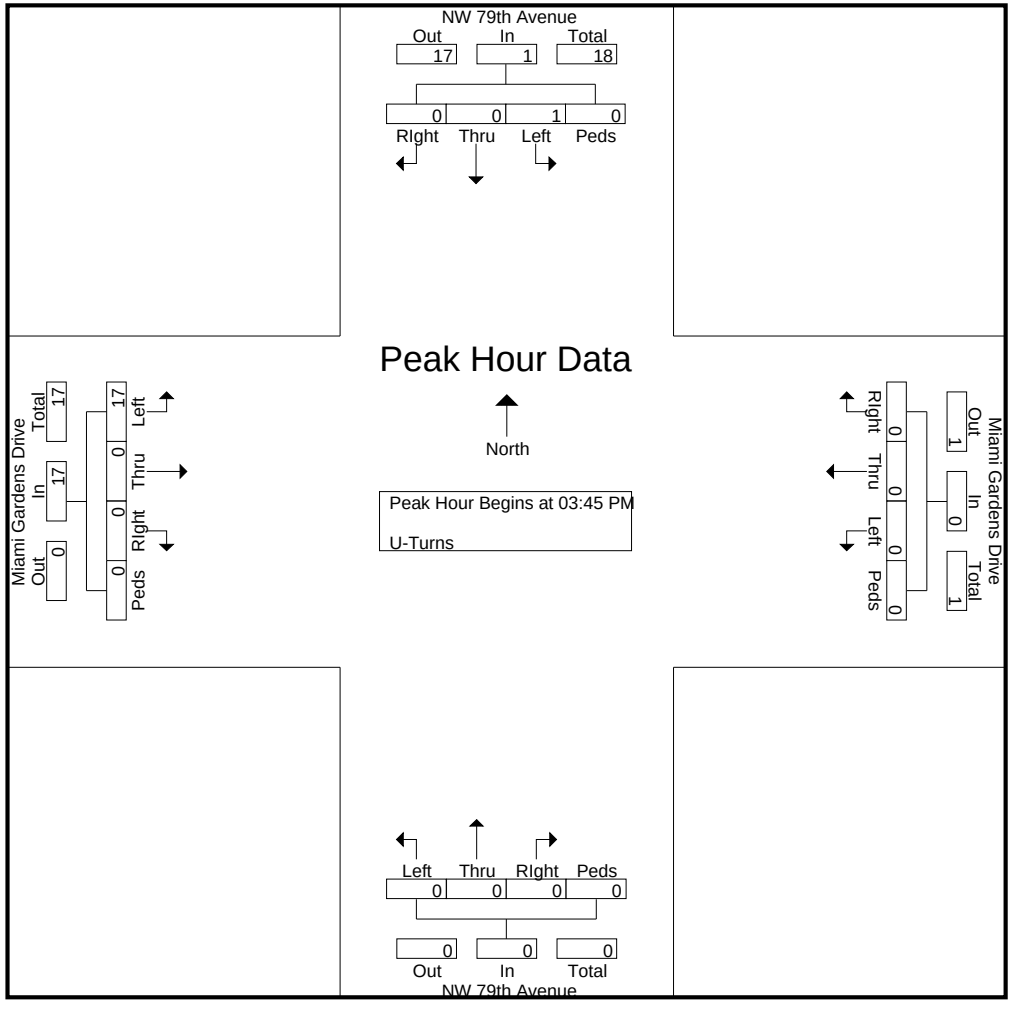

Miami Gardens Drive & NW 79th Avenue

File Name : Miami Gardens Drive & NW 79th Avenue
Site Code : 00000000
Start Date : 5/4/2016
Page No : 1

Groups Printed- Veh - Trucks - Turns

	NW 79th Avenue Southbound					NW 79th Avenue Northbound					Miami Gardens Drive Westbound					Miami Gardens Drive Eastbound					
Start Time	Left	Thru	RIght	Peds/Bike	App. Total	Left	Thru	RIght	Peds/Bike	App. Total	Left	Thru	RIght	Peds/Bike	App. Total	Left	Thru	RIght	Peds/Bike	App. Total	Int. Total
06:00 AM	37	0	18	0	55	0	0	0	0	0	0	90	8	0	98	2	68	0	0	70	223
06:15 AM	40	0	33	0	73	0	0	0	0	0	0	201	13	0	214	7	88	0	1	96	383
06:30 AM	46	0	41	0	87	0	0	0	0	0	0	316	24	0	340	5	129	0	0	134	561
06:45 AM	60	0	43	1	104	0	0	0	0	0	0	409	33	0	442	11	151	0	0	162	708
Total	183	0	135	1	319	0	0	0	0	0	0	1016	78	0	1094	25	436	0	1	462	1875
07:00 AM	80	0	65	1	146	0	0	0	0	0	0	377	36	0	413	13	182	0	0	195	754
07:15 AM	105	0	48	1	154	0	0	0	0	0	0	471	82	0	553	16	194	0	0	210	917
07:30 AM	100	0	47	0	147	0	0	0	0	0	0	355	77	0	432	39	184	0	0	223	802
07:45 AM	77	0	71	1	149	0	0	0	0	0	0	398	93	0	491	26	145	0	0	171	811
Total	362	0	231	3	596	0	0	0	0	0	0	1601	288	0	1889	94	705	0	0	799	3284
08:00 AM	75	0	67	0	142	0	0	0	0	0	0	384	111	0	495	24	146	0	0	170	807
08:15 AM	78	0	69	0	147	0	0	0	0	0	0	351	85	0	436	20	200	0	0	220	803
08:30 AM	91	0	58	1	150	0	0	0	0	0	0	325	51	0	376	21	180	0	0	201	727
08:45 AM	66	0	30	0	96	0	0	0	0	0	0	322	30	0	352	22	193	0	0	215	663
Total	310	0	224	1	535	0	0	0	0	0	0	1382	277	0	1659	87	719	0	0	806	3000
*** BREAK ***																					
03:00 PM	47	0	26	0	73	0	0	0	0	0	0	189	45	0	234	28	198	0	0	226	533
03:15 PM	28	0	22	0	50	0	0	0	0	0	0	219	47	0	266	24	176	0	0	200	516
03:30 PM	39	0	41	0	80	0	0	0	0	0	0	236	53	0	289	22	237	0	0	259	628
03:45 PM	61	0	24	0	85	0	0	0	0	0	0	238	67	0	305	44	281	0	0	325	715
Total	175	0	113	0	288	0	0	0	0	0	0	882	212	0	1094	118	892	0	0	1010	2392
04:00 PM	78	0	44	1	123	0	0	0	0	0	0	185	62	0	247	44	295	0	0	339	709
04:15 PM	58	0	41	0	99	0	0	0	0	0	0	199	46	0	245	41	309	0	0	350	694
04:30 PM	38	0	18	0	56	0	0	0	0	0	0	196	49	0	245	33	271	0	0	304	605
04:45 PM	37	0	22	0	59	0	0	0	0	0	0	194	46	1	241	48	289	0	0	337	637
Total	211	0	125	1	337	0	0	0	0	0	0	774	203	1	978	166	1164	0	0	1330	2645
05:00 PM	53	0	25	0	78	0	0	0	0	0	0	245	52	0	297	47	313	0	0	360	735
05:15 PM	55	0	28	1	84	0	0	0	0	0	0	239	57	0	296	49	374	0	0	423	803
05:30 PM	55	0	17	2	74	0	0	0	0	0	0	236	71	0	307	52	359	0	0	411	792
05:45 PM	63	0	16	0	79	0	0	0	0	0	0	222	76	0	298	66	346	0	0	412	789
Total	226	0	86	3	315	0	0	0	0	0	0	942	256	0	1198	214	1392	0	0	1606	3119
06:00 PM	47	0	30	0	77	0	0	0	0	0	0	210	77	0	287	48	332	0	0	380	744
06:15 PM	59	0	25	0	84	0	0	0	0	0	0	261	58	0	319	48	369	0	0	417	820
06:30 PM	50	0	38	0	88	0	0	0	0	0	0	231	58	0	289	45	381	0	0	426	803
06:45 PM	32	0	26	1	59	0	0	0	0	0	0	215	47	0	262	64	294	0	0	358	679
Total	188	0	119	1	308	0	0	0	0	0	0	917	240	0	1157	205	1376	0	0	1581	3046
Grand Total	1655	0	1033	10	2698	0	0	0	0	0	0	7514	1554	1	9069	909	6684	0	1	7594	19361
Apprch %	61.3	0	38.3	0.4		0	0	0	0		0	82.9	17.1	0		12	88	0	0		
Total %	8.5	0	5.3	0.1	13.9	0	0	0	0	0	0	38.8	8	0	46.8	4.7	34.5	0	0	39.2	

Miami Gardens Drive & NW 79th Avenue

File Name : Miami Gardens Drive & NW 79th Avenue
Site Code : 00000000
Start Date : 5/4/2016
Page No : 2

Groups Printed- Veh - Trucks - Turns

	NW 79th Avenue Southbound					NW 79th Avenue Northbound					Miami Gardens Drive Westbound					Miami Gardens Drive Eastbound					
	Left	Thru	RIght	Peds/Bike	App. Total	Left	Thru	RIght	Peds/Bike	App. Total	Left	Thru	RIght	Peds/Bike	App. Total	Left	Thru	RIght	Peds/Bike	App. Total	Int. Total
Veh	1605	0	1022	5	2632	0	0	0	0	0	0	7401	1518	0	8919	838	6604	0	1	7443	18994
% Veh	97	0	98.9	50	97.6	0	0	0	0	0	0	98.5	97.7	0	98.3	92.2	98.8	0	100	98	98.1
Trucks	44	0	11	5	60	0	0	0	0	0	0	113	36	1	150	5	80	0	0	85	295
% Trucks	2.7	0	1.1	50	2.2	0	0	0	0	0	0	1.5	2.3	100	1.7	0.6	1.2	0	0	1.1	1.5
U-Turns	6	0	0	0	6	0	0	0	0	0	0	0	0	0	0	66	0	0	0	66	72
% U-Turns	0.4	0	0	0	0.2	0	0	0	0	0	0	0	0	0	0	7.3	0	0	0	0.9	0.4

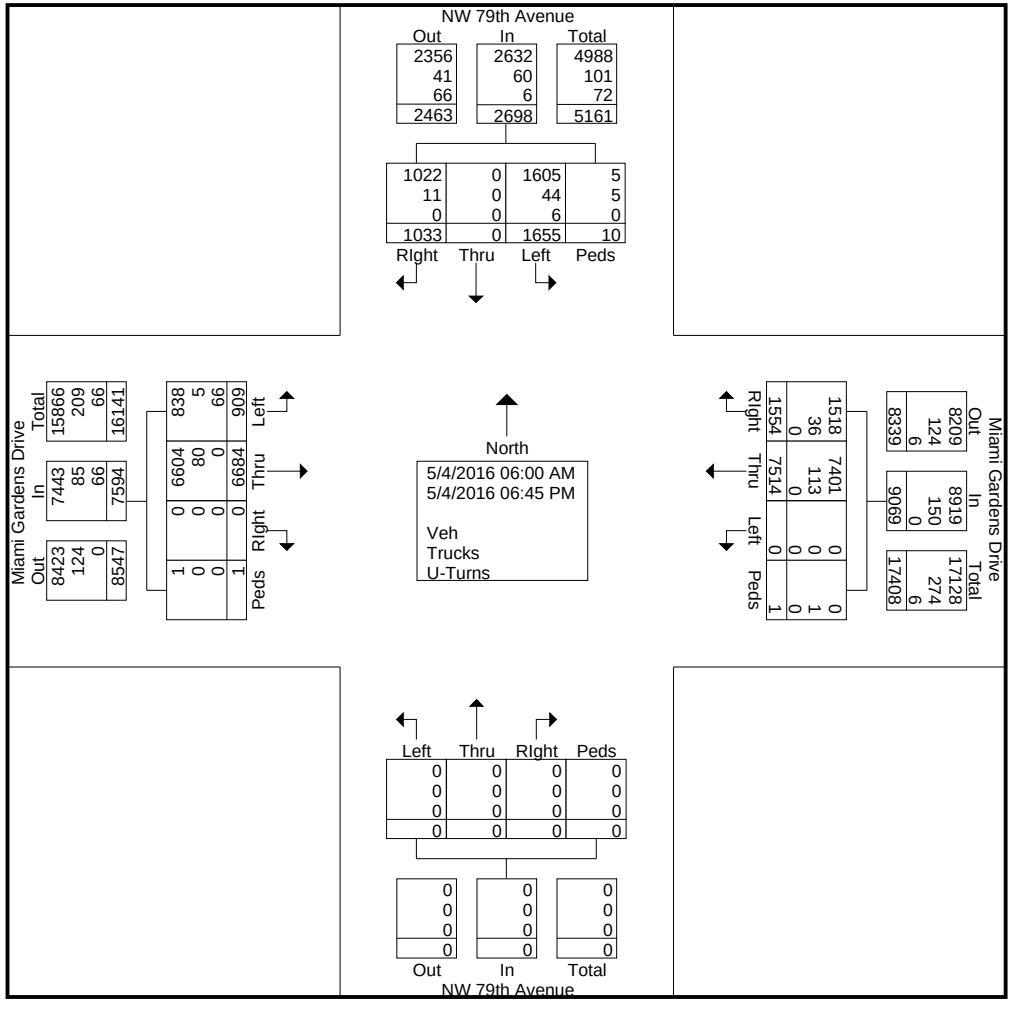

Miami Gardens Drive & NW 79th Avenue

File Name : Miami Gardens Drive & NW 79th Avenue
Site Code : 00000000
Start Date : 5/4/2016
Page No : 3

	NW 79th Avenue Southbound					NW 79th Avenue Northbound					Miami Gardens Drive Westbound					Miami Gardens Drive Eastbound					
Start Time	Left	Thru	RIght	Peds/Bike	App. Total	Left	Thru	RIght	Peds/Bike	App. Total	Left	Thru	RIght	Peds/Bike	App. Total	Left	Thru	RIght	Peds/Bike	App. Total	Int. Total
Peak Hour Analysis From 06:00 AM to 08:45 AM - Peak 1 of 1																					
Peak Hour for Entire Intersection Begins at 07:15 AM																					
07:15 AM	**105**	0	48	**1**	**154**	0	0	0	0	0	0	**471**	82	0	**553**	16	**194**	0	0	210	**917**
07:30 AM	100	0	47	0	147	0	0	0	0	0	0	355	77	0	432	**39**	184	0	0	**223**	802
07:45 AM	77	0	**71**	1	149	0	0	0	0	0	0	398	93	0	491	26	145	0	0	171	811
08:00 AM	75	0	67	0	142	0	0	0	0	0	0	384	**111**	0	495	24	146	0	0	170	807
Total Volume	357	0	233	2	592	0	0	0	0	0	0	1608	363	0	1971	105	669	0	0	774	3337
% App. Total	60.3	0	39.4	0.3		0	0	0	0		0	81.6	18.4	0		13.6	86.4	0	0		
PHF	.850	.000	.820	.500	.961	.000	.000	.000	.000	.000	.000	.854	.818	.000	.891	.673	.862	.000	.000	.868	.910

Miami Gardens Drive & NW 79th Avenue

File Name : Miami Gardens Drive & NW 79th Avenue
Site Code : 00000000
Start Date : 5/4/2016
Page No : 4

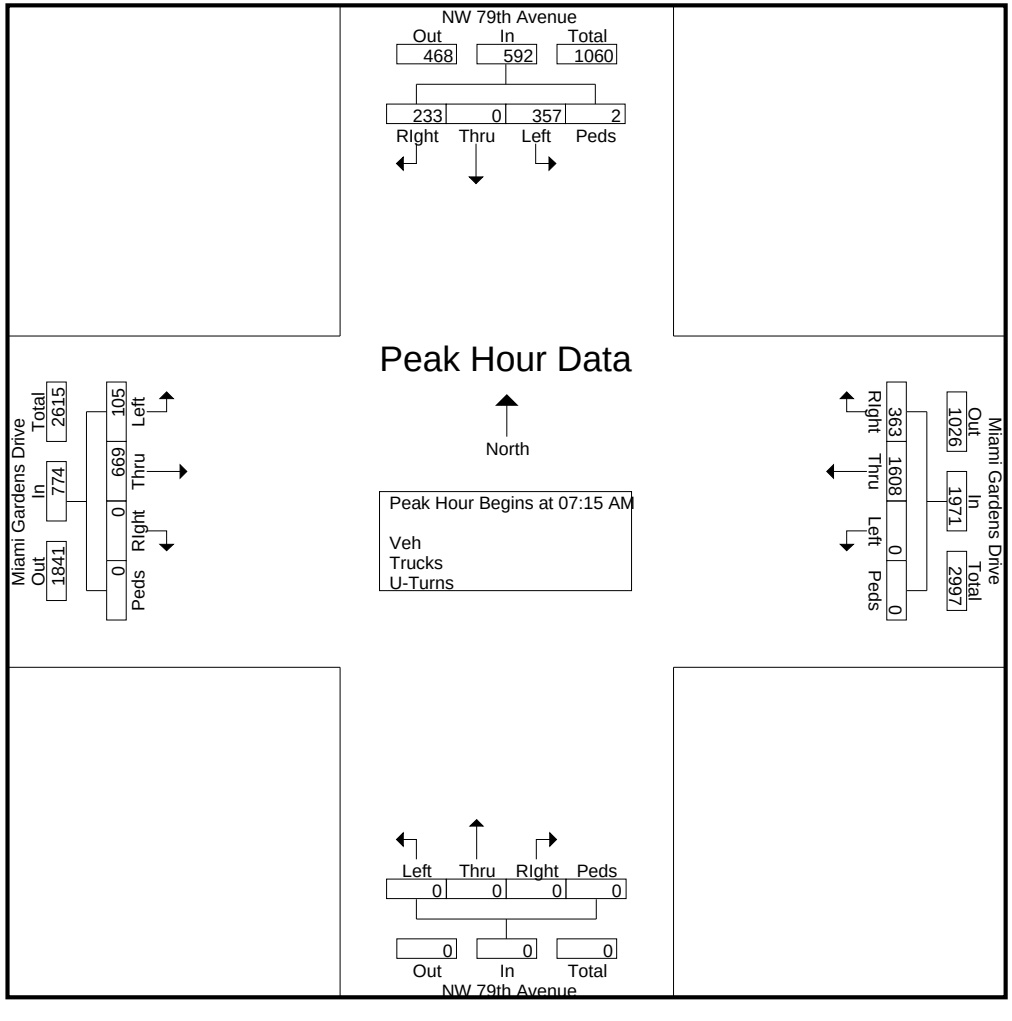

Miami Gardens Drive & NW 79th Avenue

File Name : Miami Gardens Drive & NW 79th Avenue
Site Code : 00000000
Start Date : 5/4/2016
Page No : 5

	NW 79th Avenue Southbound					NW 79th Avenue Northbound					Miami Gardens Drive Westbound					Miami Gardens Drive Eastbound					
Start Time	Left	Thru	RIght	Peds/Bike	App. Total	Left	Thru	RIght	Peds/Bike	App. Total	Left	Thru	RIght	Peds/Bike	App. Total	Left	Thru	RIght	Peds/Bike	App. Total	Int. Total
Peak Hour Analysis From 03:00 PM to 06:45 PM - Peak 1 of 1																					
Peak Hour for Entire Intersection Begins at 05:45 PM																					
05:45 PM	**63**	0	16	0	79	0	0	0	0	0	0	222	76	0	298	**66**	346	0	0	412	789
06:00 PM	47	0	30	0	77	0	0	0	0	0	0	210	**77**	0	287	48	332	0	0	380	744
06:15 PM	59	0	25	0	84	0	0	0	0	0	0	**261**	58	0	**319**	48	369	0	0	417	**820**
06:30 PM	50	0	**38**	0	**88**	0	0	0	0	0	0	231	58	0	289	45	**381**	0	0	**426**	803
Total Volume	219	0	109	0	328	0	0	0	0	0	0	924	269	0	1193	207	1428	0	0	1635	3156
% App. Total	66.8	0	33.2	0		0	0	0	0		0	77.5	22.5	0		12.7	87.3	0	0		
PHF	.869	.000	.717	.000	.932	.000	.000	.000	.000	.000	.000	.885	.873	.000	.935	.784	.937	.000	.000	.960	.962

Miami Gardens Drive & NW 79th Avenue

File Name : Miami Gardens Drive & NW 79th Avenue
Site Code : 00000000
Start Date : 5/4/2016
Page No : 6

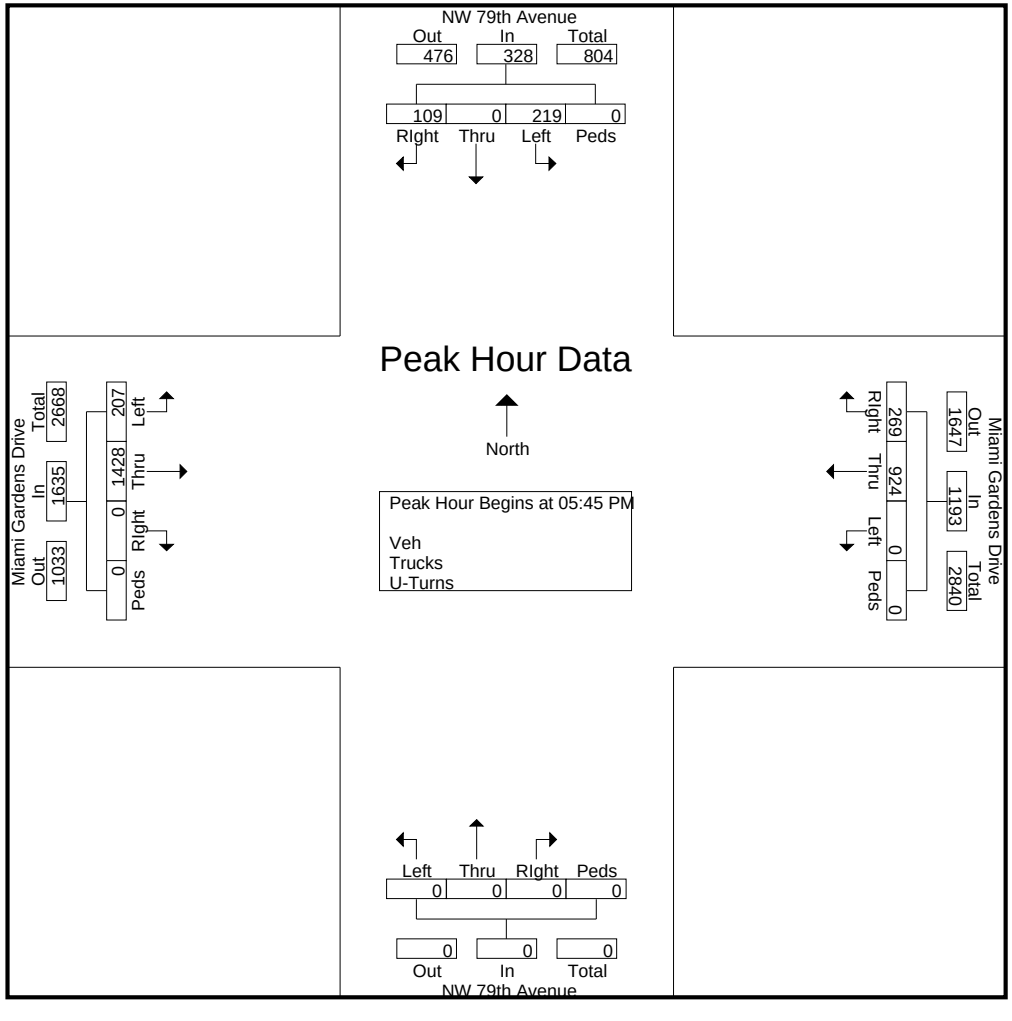

Miami Gardens Drive & Wentworth Drive

File Name : Miami Gardens Drive & Wentworth Drive
Site Code : 00000000
Start Date : 5/4/2016
Page No : 1

Groups Printed- Trucks

	Wentworth Drive Southbound					Driveway Northbound					Miami Gardens Drive Westbound					Miami Gardens Drive Eastbound					
Start Time	Left	Thru	RIght	Bikes	App. Total	Left	Thru	RIght	Bikes	App. Total	Left	Thru	RIght	Bikes	App. Total	Left	Thru	RIght	Bikes	App. Total	Int. Total
06:00 AM	0	0	0	0	0	0	0	0	0	0	0	7	0	0	7	0	5	0	0	5	12
06:15 AM	1	0	1	0	2	0	0	0	0	0	0	9	0	0	9	0	9	0	0	9	20
06:30 AM	0	0	1	1	2	0	0	0	0	0	0	11	0	0	11	0	11	0	0	11	24
06:45 AM	0	0	0	0	0	0	0	0	1	1	0	0	0	0	0	0	14	0	0	14	15
Total	1	0	2	1	4	0	0	0	1	1	0	27	0	0	27	0	39	0	0	39	71
07:00 AM	0	0	0	1	1	0	0	0	2	2	0	4	0	0	4	0	4	0	0	4	11
07:15 AM	0	0	1	1	2	0	0	0	1	1	0	11	2	0	13	0	5	0	0	5	21
07:30 AM	0	0	2	0	2	0	0	0	1	1	0	6	0	0	6	0	4	0	0	4	13
07:45 AM	0	0	1	2	3	0	0	0	0	0	0	7	0	0	7	0	3	0	0	3	13
Total	0	0	4	4	8	0	0	0	4	4	0	28	2	0	30	0	16	0	0	16	58
08:00 AM	1	0	4	0	5	0	0	0	2	2	0	10	0	0	10	1	12	0	0	13	30
08:15 AM	0	0	0	1	1	0	0	0	0	0	0	9	0	0	9	0	4	0	0	4	14
08:30 AM	0	0	0	0	0	0	0	0	2	2	0	8	0	0	8	0	5	0	0	5	15
08:45 AM	0	0	0	0	0	0	0	0	0	0	0	4	0	0	4	0	2	1	0	3	7
Total	1	0	4	1	6	0	0	0	4	4	0	31	0	0	31	1	23	1	0	25	66
*** BREAK ***																					
03:00 PM	0	0	3	0	3	0	0	0	1	1	0	10	0	0	10	1	6	0	0	7	21
03:15 PM	0	0	1	0	1	0	0	0	0	0	0	10	0	0	10	0	5	0	0	5	16
03:30 PM	0	0	0	0	0	0	0	0	2	2	0	8	0	0	8	0	6	0	0	6	16
03:45 PM	0	0	0	0	0	0	0	0	1	1	0	6	0	0	6	2	8	0	0	10	17
Total	0	0	4	0	4	0	0	0	4	4	0	34	0	0	34	3	25	0	0	28	70
04:00 PM	0	0	0	0	0	0	0	0	0	0	0	5	0	0	5	1	9	0	0	10	15
04:15 PM	0	0	0	0	0	0	0	0	0	0	0	4	0	0	4	1	5	0	0	6	10
04:30 PM	0	0	0	0	0	0	0	0	0	0	0	7	0	0	7	0	5	0	0	5	12
04:45 PM	0	0	0	0	0	0	0	0	1	1	0	6	0	0	6	0	8	0	0	8	15
Total	0	0	0	0	0	0	0	0	1	1	0	22	0	0	22	2	27	0	0	29	52
05:00 PM	0	0	0	0	0	0	0	0	2	2	0	4	0	0	4	0	2	0	0	2	8
05:15 PM	0	0	0	2	2	0	0	0	0	0	0	2	0	0	2	0	2	0	0	2	6
05:30 PM	0	0	0	0	0	0	0	0	1	1	0	3	0	0	3	0	3	0	0	3	7
05:45 PM	0	0	0	0	0	0	0	0	0	0	0	2	0	0	2	0	3	0	0	3	5
Total	0	0	0	2	2	0	0	0	3	3	0	11	0	0	11	0	10	0	0	10	26
06:00 PM	0	0	0	0	0	0	0	0	0	0	0	2	0	0	2	0	2	0	0	2	4
06:15 PM	0	0	0	0	0	0	0	0	1	1	0	0	0	0	0	0	2	0	0	2	3
06:30 PM	0	0	0	0	0	0	0	0	5	5	0	2	0	0	2	0	2	0	0	2	9
06:45 PM	0	0	0	1	1	0	0	0	0	0	0	2	0	0	2	0	0	0	0	0	3
Total	0	0	0	1	1	0	0	0	6	6	0	6	0	0	6	0	6	0	0	6	19
Grand Total	2	0	14	9	25	0	0	0	23	23	0	159	2	0	161	6	146	1	0	153	362
Apprch %	8	0	56	36		0	0	0	100		0	98.8	1.2	0		3.9	95.4	0.7	0		
Total %	0.6	0	3.9	2.5	6.9	0	0	0	6.4	6.4	0	43.9	0.6	0	44.5	1.7	40.3	0.3	0	42.3	

Miami Gardens Drive & Wentworth Drive

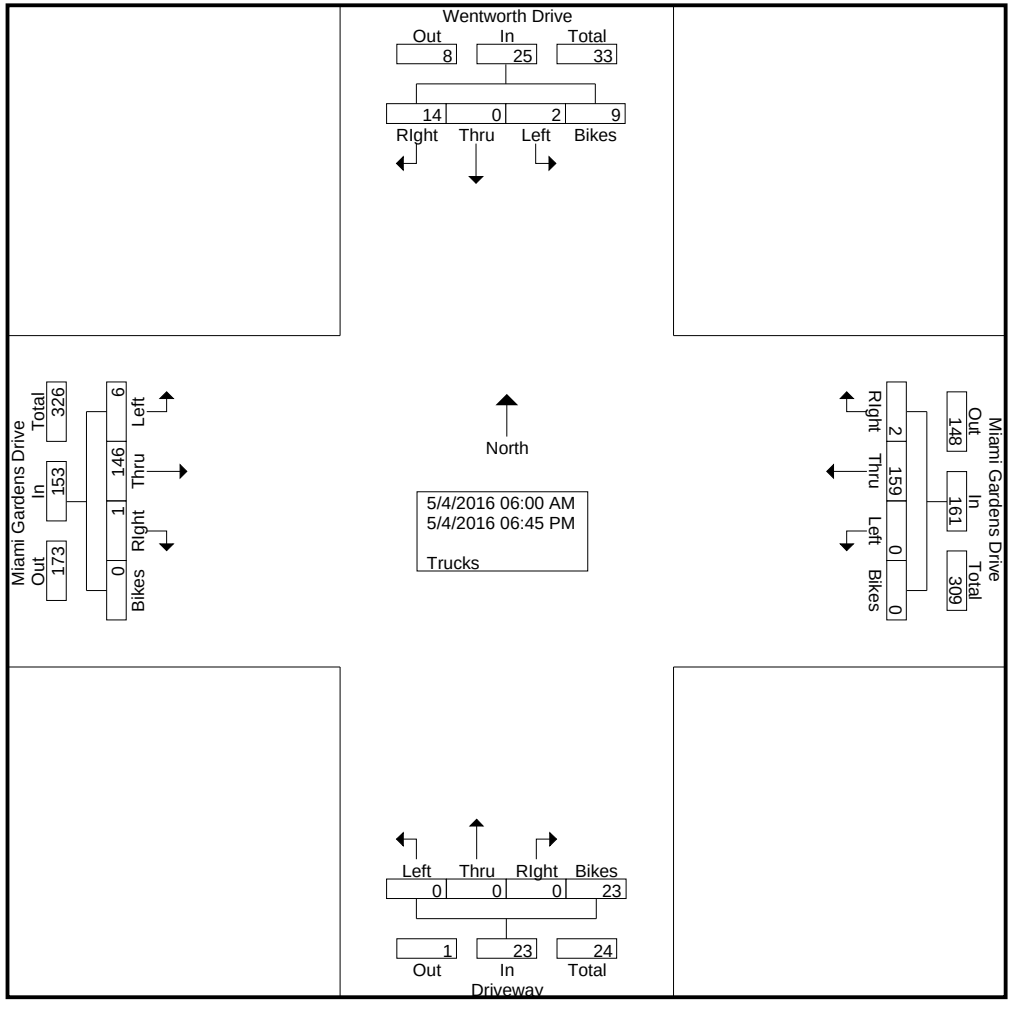

Miami Gardens Drive & Wentworth Drive

File Name : Miami Gardens Drive & Wentworth Drive
Site Code : 00000000
Start Date : 5/4/2016
Page No : 3

	Wentworth Drive Southbound					Driveway Northbound					Miami Gardens Drive Westbound					Miami Gardens Drive Eastbound					
Start Time	Left	Thru	RIght	Bikes	App. Total	Left	Thru	RIght	Bikes	App. Total	Left	Thru	RIght	Bikes	App. Total	Left	Thru	RIght	Bikes	App. Total	Int. Total
Peak Hour Analysis From 06:00 AM to 08:45 AM - Peak 1 of 1																					
Peak Hour for Entire Intersection Begins at 07:15 AM																					
07:15 AM	0	0	1	1	2	0	0	0	1	1	0	**11**	**2**	0	**13**	0	5	0	0	5	21
07:30 AM	0	0	2	0	2	0	0	0	1	1	0	6	0	0	6	0	4	0	0	4	13
07:45 AM	0	0	1	**2**	3	0	0	0	0	0	0	7	0	0	7	0	3	0	0	3	13
08:00 AM	**1**	0	**4**	0	**5**	0	0	0	**2**	**2**	0	10	0	0	10	**1**	**12**	0	0	**13**	**30**
Total Volume	1	0	8	3	12	0	0	0	4	4	0	34	2	0	36	1	24	0	0	25	77
% App. Total	8.3	0	66.7	25		0	0	0	100		0	94.4	5.6	0		4	96	0	0		
PHF	.250	.000	.500	.375	.600	.000	.000	.000	.500	.500	.000	.773	.250	.000	.692	.250	.500	.000	.000	.481	.642

Miami Gardens Drive & Wentworth Drive

File Name : Miami Gardens Drive & Wentworth Drive
Site Code : 00000000
Start Date : 5/4/2016
Page No : 4

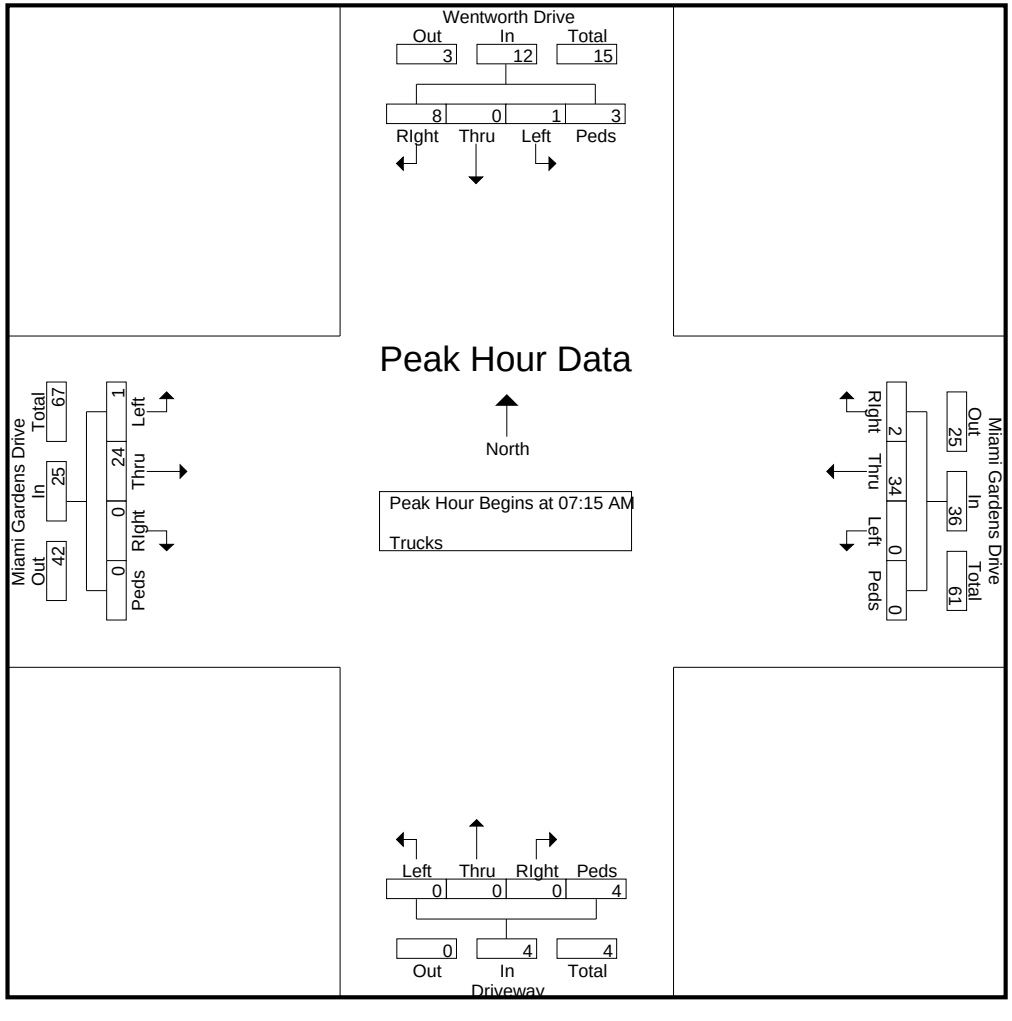

Miami Gardens Drive & Wentworth Drive

File Name : Miami Gardens Drive & Wentworth Drive
Site Code : 00000000
Start Date : 5/4/2016
Page No : 5

	Wentworth Drive Southbound					Driveway Northbound					Miami Gardens Drive Westbound					Miami Gardens Drive Eastbound					
Start Time	Left	Thru	RIght	Bikes	App. Total	Left	Thru	RIght	Bikes	App. Total	Left	Thru	RIght	Bikes	App. Total	Left	Thru	RIght	Bikes	App. Total	Int. Total
Peak Hour Analysis From 03:00 PM to 06:45 PM - Peak 1 of 1																					
Peak Hour for Entire Intersection Begins at 03:00 PM																					
03:00 PM	0	0	**3**	0	**3**	0	0	0	1	1	0	**10**	0	0	**10**	1	6	0	0	7	**21**
03:15 PM	0	0	1	0	1	0	0	0	0	0	0	10	0	0	10	0	5	0	0	5	16
03:30 PM	0	0	0	0	0	0	0	0	**2**	**2**	0	8	0	0	8	0	6	0	0	6	16
03:45 PM	0	0	0	0	0	0	0	0	1	1	0	6	0	0	6	**2**	**8**	0	0	**10**	17
Total Volume	0	0	4	0	4	0	0	0	4	4	0	34	0	0	34	3	25	0	0	28	70
% App. Total	0	0	100	0		0	0	0	100		0	100	0	0		10.7	89.3	0	0		
PHF	.000	.000	.333	.000	.333	.000	.000	.000	.500	.500	.000	.850	.000	.000	.850	.375	.781	.000	.000	.700	.833

Miami Gardens Drive & Wentworth Drive

File Name : Miami Gardens Drive & Wentworth Drive
Site Code : 00000000
Start Date : 5/4/2016
Page No : 6

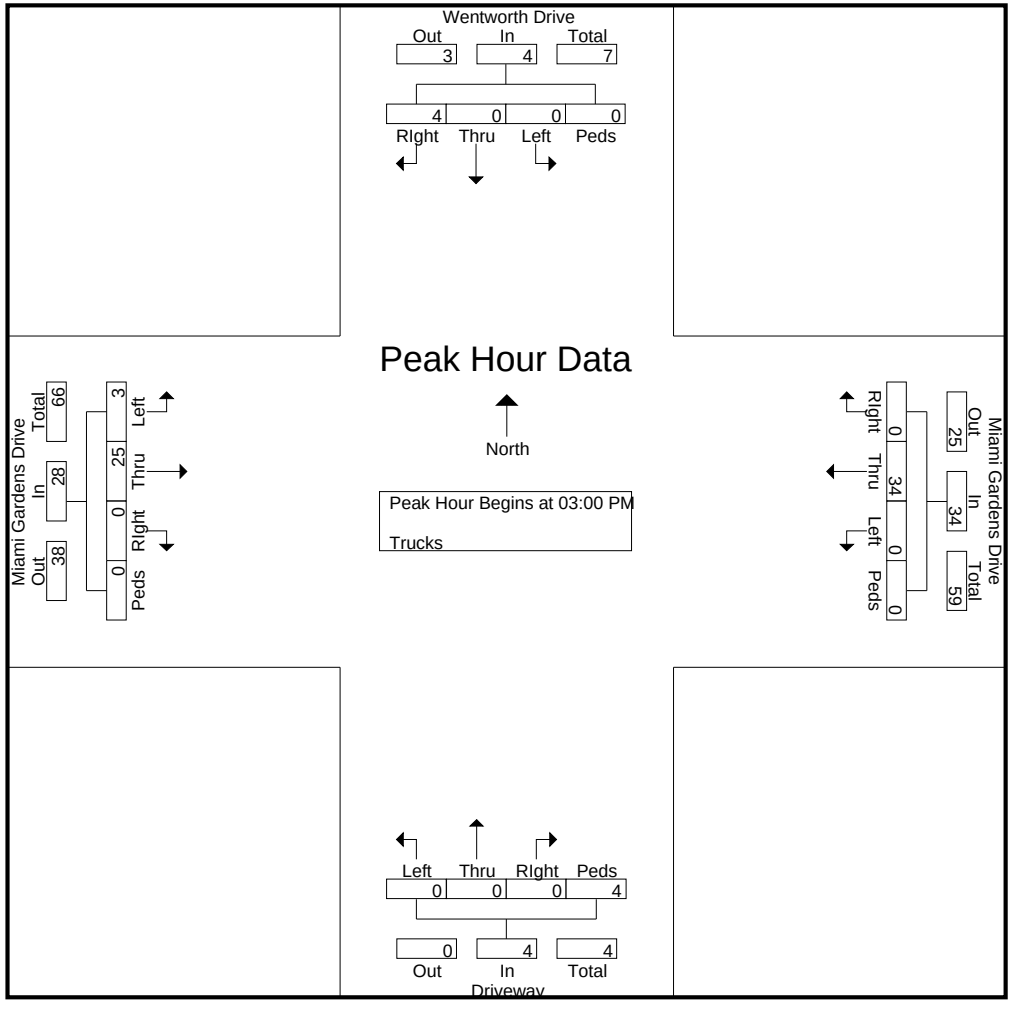

Miami Gardens Drive & Wentworth Drive

File Name : Miami Gardens Drive & Wentworth Drive
Site Code : 00000000
Start Date : 5/4/2016
Page No : 1

Groups Printed- Turns

	Wentworth Drive Southbound					Driveway Northbound					Miami Gardens Drive Westbound					Miami Gardens Drive Eastbound					
Start Time	Left	Thru	RIght	Peds/Bike	App. Total	Left	Thru	RIght	Peds/Bike	App. Total	Left	Thru	RIght	Peds/Bike	App. Total	Left	Thru	RIght	Peds/Bike	App. Total	Int. Total
06:00 AM	2	0	0	0	2	0	0	0	0	0	2	0	0	0	2	2	0	0	0	2	6
06:15 AM	0	0	0	0	0	0	0	0	0	0	2	0	0	0	2	1	0	0	0	1	3
06:30 AM	0	0	0	0	0	0	0	0	0	0	1	0	0	0	1	2	0	0	0	2	3
06:45 AM	0	0	0	0	0	0	0	0	0	0	1	0	0	0	1	2	0	0	0	2	3
Total	2	0	0	0	2	0	0	0	0	0	6	0	0	0	6	7	0	0	0	7	15
07:00 AM	0	0	0	0	0	0	0	0	0	0	0	0	0	0	0	1	0	0	0	1	1
07:15 AM	0	0	0	0	0	0	0	0	0	0	2	0	0	0	2	0	0	0	0	0	2
07:30 AM	0	0	0	0	0	0	0	0	0	0	0	0	0	0	0	1	0	0	0	1	1
07:45 AM	0	0	0	0	0	0	0	0	0	0	0	0	0	0	0	1	0	0	0	1	1
Total	0	0	0	0	0	0	0	0	0	0	2	0	0	0	2	3	0	0	0	3	5
08:00 AM	0	0	0	0	0	0	0	0	0	0	0	0	0	0	0	2	0	0	0	2	2
08:15 AM	0	0	0	0	0	0	0	0	0	0	0	0	0	0	0	1	0	0	0	1	1
08:30 AM	0	0	0	0	0	0	0	0	0	0	0	0	0	0	0	4	0	0	0	4	4
08:45 AM	0	0	0	0	0	0	0	0	0	0	0	0	0	0	0	3	0	0	0	3	3
Total	0	0	0	0	0	0	0	0	0	0	0	0	0	0	0	10	0	0	0	10	10
*** BREAK ***																					
03:15 PM	0	0	0	0	0	0	0	0	0	0	0	0	0	0	0	2	0	0	0	2	2
03:30 PM	0	0	0	0	0	0	0	0	0	0	0	0	0	0	0	1	0	0	0	1	1
03:45 PM	0	0	0	0	0	0	0	0	0	0	0	0	0	0	0	2	1	0	0	3	3
Total	0	0	0	0	0	0	0	0	0	0	0	0	0	0	0	5	1	0	0	6	6
04:00 PM	0	0	0	0	0	0	0	0	0	0	0	0	0	0	0	2	0	0	0	2	2
04:15 PM	0	0	0	0	0	0	0	0	0	0	0	0	0	0	0	3	0	0	0	3	3
04:30 PM	0	0	0	0	0	0	0	0	0	0	0	0	0	0	0	3	0	0	0	3	3
04:45 PM	0	0	0	0	0	0	0	0	0	0	1	0	0	0	1	3	0	0	0	3	4
Total	0	0	0	0	0	0	0	0	0	0	1	0	0	0	1	11	0	0	0	11	12
05:00 PM	0	0	0	1	1	0	0	0	0	0	0	0	0	0	0	5	0	0	0	5	6
05:15 PM	0	0	0	0	0	0	0	0	0	0	0	0	0	0	0	5	0	0	0	5	5
05:30 PM	0	0	0	0	0	0	0	0	0	0	0	0	0	0	0	3	0	0	0	3	3
*** BREAK ***																					
Total	0	0	0	1	1	0	0	0	0	0	0	0	0	0	0	13	0	0	0	13	14
06:00 PM	0	0	0	0	0	0	0	0	0	0	0	0	0	0	0	4	0	0	0	4	4
06:15 PM	0	0	0	0	0	0	0	0	0	0	1	0	0	0	1	5	0	0	0	5	6
06:30 PM	0	0	0	0	0	0	0	0	0	0	0	0	0	0	0	2	0	0	0	2	2
06:45 PM	0	0	0	0	0	0	0	0	0	0	2	0	0	0	2	1	0	0	0	1	3
Total	0	0	0	0	0	0	0	0	0	0	3	0	0	0	3	12	0	0	0	12	15
Grand Total	2	0	0	1	3	0	0	0	0	0	12	0	0	0	12	61	1	0	0	62	77
Apprch %	66.7	0	0	33.3		0	0	0	0		100	0	0	0		98.4	1.6	0	0		
Total %	2.6	0	0	1.3	3.9	0	0	0	0	0	15.6	0	0	0	15.6	79.2	1.3	0	0	80.5	

Miami Gardens Drive & Wentworth Drive

File Name : Miami Gardens Drive & Wentworth Drive
Site Code : 00000000
Start Date : 5/4/2016
Page No : 2

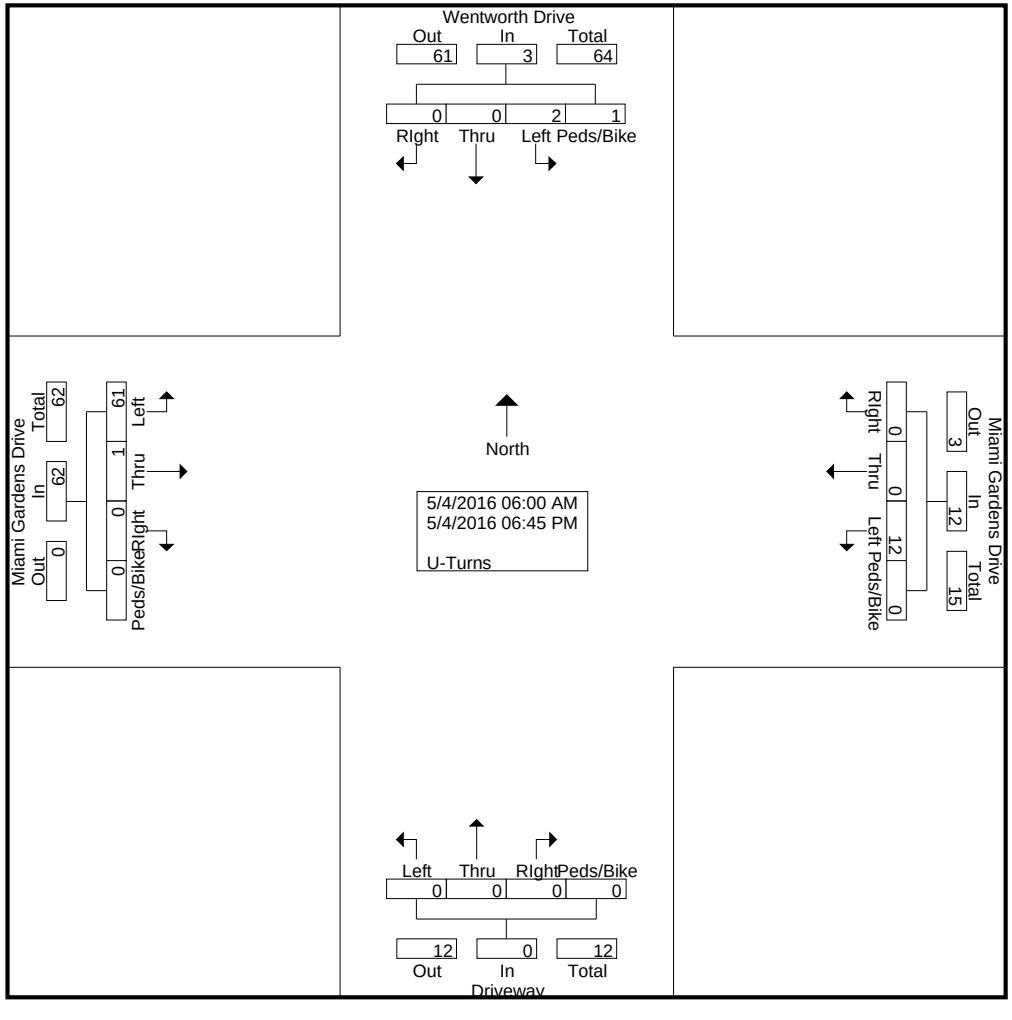

Miami Gardens Drive & Wentworth Drive

File Name : Miami Gardens Drive & Wentworth Drive
Site Code : 00000000
Start Date : 5/4/2016
Page No : 3

	Wentworth Drive Southbound					Driveway Northbound					Miami Gardens Drive Westbound					Miami Gardens Drive Eastbound					
Start Time	Left	Thru	RIght	Peds/Bike	App. Total	Left	Thru	RIght	Peds/Bike	App. Total	Left	Thru	RIght	Peds/Bike	App. Total	Left	Thru	RIght	Peds/Bike	App. Total	Int. Total
Peak Hour Analysis From 06:00 AM to 08:45 AM - Peak 1 of 1																					
Peak Hour for Entire Intersection Begins at 06:00 AM																					
06:00 AM	**2**	0	0	0	**2**	0	0	0	0	0	**2**	0	0	0	**2**	**2**	0	0	0	**2**	**6**
06:15 AM	0	0	0	0	0	0	0	0	0	0	2	0	0	0	2	1	0	0	0	1	3
06:30 AM	0	0	0	0	0	0	0	0	0	0	1	0	0	0	1	2	0	0	0	2	3
06:45 AM	0	0	0	0	0	0	0	0	0	0	1	0	0	0	1	2	0	0	0	2	3
Total Volume	2	0	0	0	2	0	0	0	0	0	6	0	0	0	6	7	0	0	0	7	15
% App. Total	100	0	0	0		0	0	0	0		100	0	0	0		100	0	0	0		
PHF	.250	.000	.000	.000	.250	.000	.000	.000	.000	.000	.750	.000	.000	.000	.750	.875	.000	.000	.000	.875	.625

Miami Gardens Drive & Wentworth Drive

File Name : Miami Gardens Drive & Wentworth Drive
Site Code : 00000000
Start Date : 5/4/2016
Page No : 4

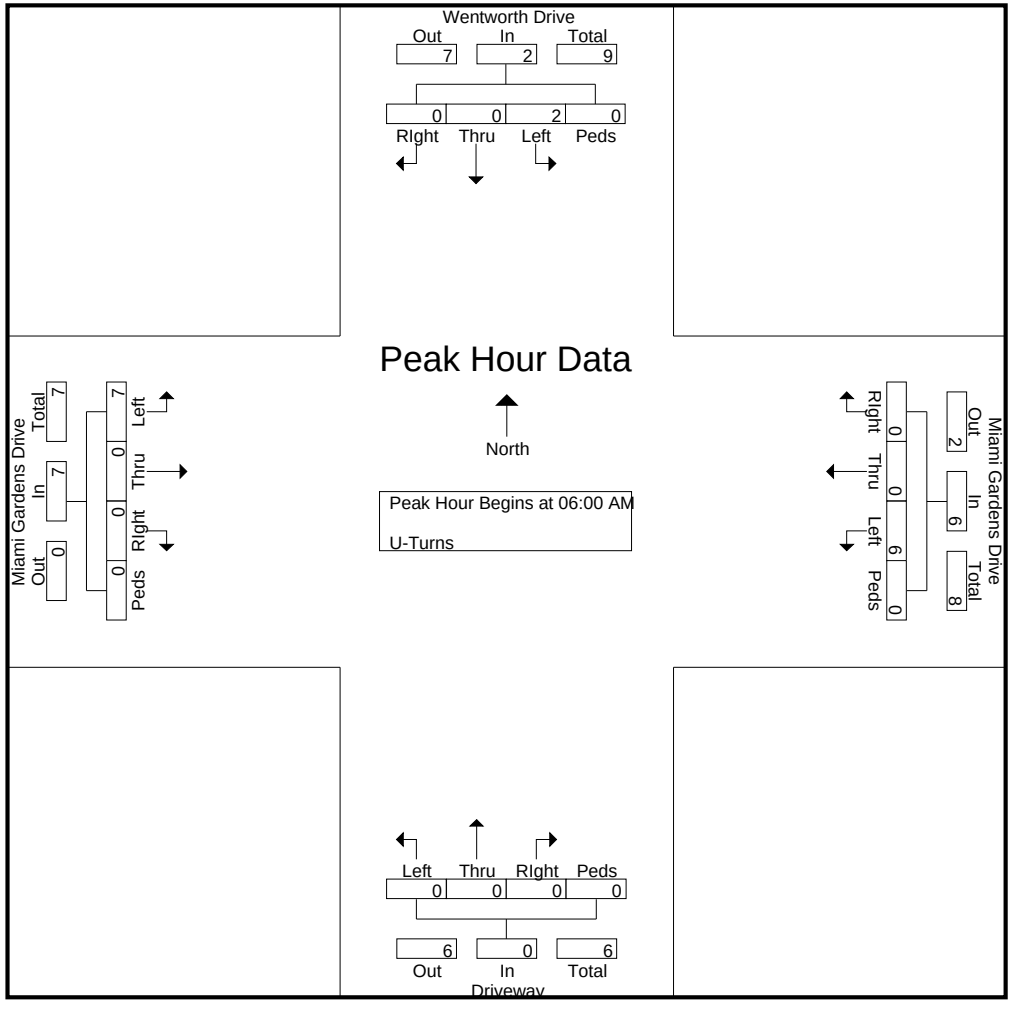

Miami Gardens Drive & Wentworth Drive

File Name : Miami Gardens Drive & Wentworth Drive
Site Code : 00000000
Start Date : 5/4/2016
Page No : 5

	Wentworth Drive Southbound					Driveway Northbound					Miami Gardens Drive Westbound					Miami Gardens Drive Eastbound					
Start Time	Left	Thru	RIght	Peds/Bike	App. Total	Left	Thru	RIght	Peds/Bike	App. Total	Left	Thru	RIght	Peds/Bike	App. Total	Left	Thru	RIght	Peds/Bike	App. Total	Int. Total
Peak Hour Analysis From 03:00 PM to 06:45 PM - Peak 1 of 1																					
Peak Hour for Entire Intersection Begins at 04:30 PM																					
04:30 PM	0	0	0	0	0	0	0	0	0	0	0	0	0	0	0	3	0	0	0	3	3
04:45 PM	0	0	0	0	0	0	0	0	0	0	**1**	0	0	0	**1**	3	0	0	0	3	4
05:00 PM	0	0	0	**1**	**1**	0	0	0	0	0	0	0	0	0	0	**5**	0	0	0	**5**	**6**
05:15 PM	0	0	0	0	0	0	0	0	0	0	0	0	0	0	0	5	0	0	0	5	5
Total Volume	0	0	0	1	1	0	0	0	0	0	1	0	0	0	1	16	0	0	0	16	18
% App. Total	0	0	0	100		0	0	0	0		100	0	0	0		100	0	0	0		
PHF	.000	.000	.000	.250	.250	.000	.000	.000	.000	.000	.250	.000	.000	.000	.250	.800	.000	.000	.000	.800	.750

Miami Gardens Drive & Wentworth Drive

File Name : Miami Gardens Drive & Wentworth Drive
Site Code : 00000000
Start Date : 5/4/2016
Page No : 6

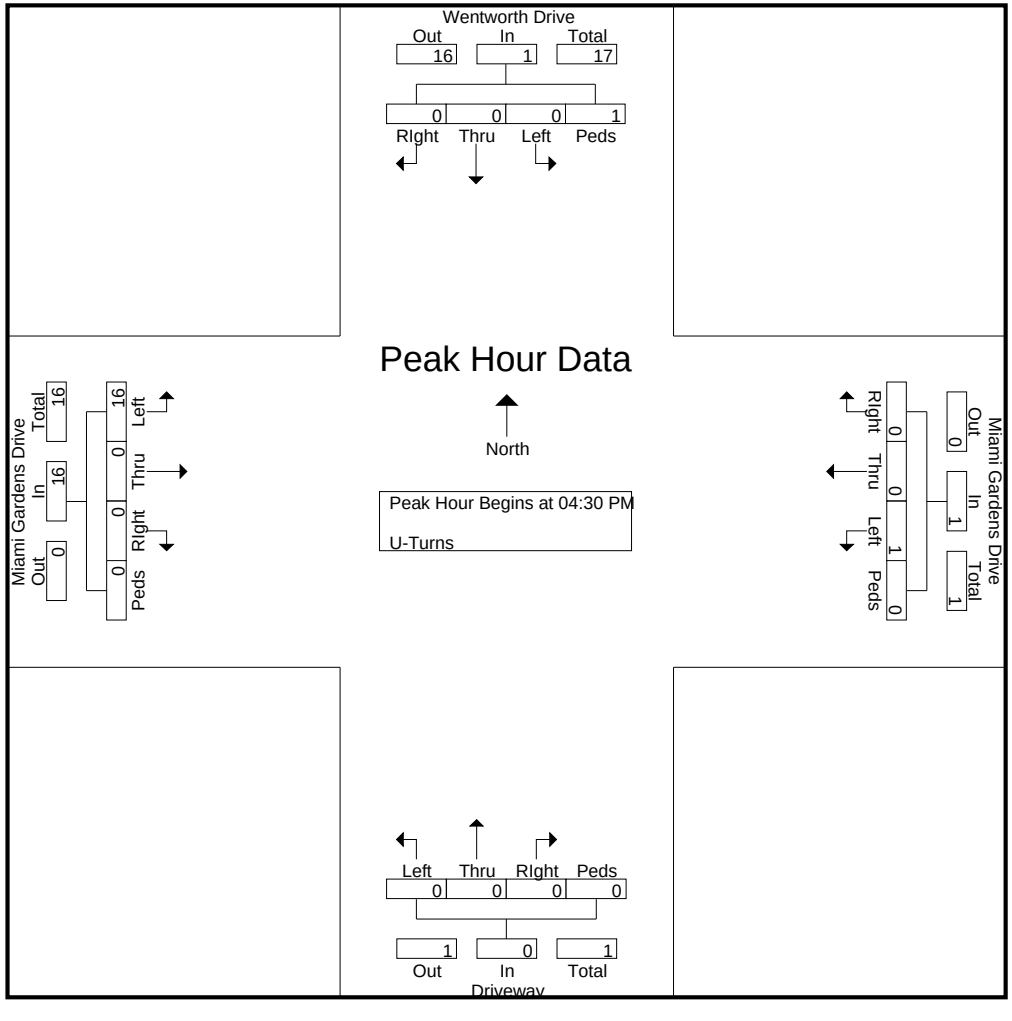

Miami Gardens Drive & Wentworth Drive

File Name : Miami Gardens Drive & Wentworth Drive
Site Code : 00000000
Start Date : 5/4/2016
Page No : 1

Groups Printed- Veh - Trucks - Turns

	Wentworth Drive Southbound					Driveway Northbound					Miami Gardens Drive Westbound					Miami Gardens Drive Eastbound					
Start Time	Left	Thru	RIght	Peds/Bike	App. Total	Left	Thru	RIght	Peds/Bike	App. Total	Left	Thru	RIght	Peds/Bike	App. Total	Left	Thru	RIght	Peds/Bike	App. Total	Int. Total
06:00 AM	8	0	4	0	12	0	0	0	1	1	2	98	0	0	100	2	96	0	0	98	211
06:15 AM	9	0	14	1	24	0	0	0	0	0	3	190	0	0	193	1	120	0	0	121	338
06:30 AM	4	0	22	1	27	0	0	1	2	3	1	328	0	0	329	4	162	0	0	166	525
06:45 AM	2	0	27	0	29	0	0	0	1	1	1	425	1	0	427	2	208	0	0	210	667
Total	23	0	67	2	92	0	0	1	4	5	7	1041	1	0	1049	9	586	0	0	595	1741
07:00 AM	2	0	47	3	52	0	0	0	3	3	0	388	1	0	389	3	251	0	0	254	698
07:15 AM	4	0	34	3	41	0	0	0	1	1	2	488	3	0	493	5	248	0	0	253	788
07:30 AM	4	0	34	0	38	0	0	0	3	3	0	393	2	0	395	5	224	0	0	229	665
07:45 AM	0	0	40	2	42	0	0	0	1	1	0	432	1	0	433	14	219	0	0	233	709
Total	10	0	155	8	173	0	0	0	8	8	2	1701	7	0	1710	27	942	0	0	969	2860
08:00 AM	1	0	44	2	47	0	0	0	3	3	0	440	0	0	440	11	213	0	0	224	714
08:15 AM	0	0	26	1	27	0	0	0	6	6	0	412	2	0	414	5	262	0	0	267	714
08:30 AM	3	0	19	0	22	0	0	0	9	9	0	348	1	0	349	12	228	0	0	240	620
08:45 AM	1	0	17	0	18	0	0	0	2	2	0	322	3	0	325	11	215	1	0	227	572
Total	5	0	106	3	114	0	0	0	20	20	0	1522	6	0	1528	39	918	1	0	958	2620
*** BREAK ***																					
03:00 PM	0	0	11	0	11	0	0	2	3	5	0	238	0	0	238	17	222	1	0	240	494
03:15 PM	0	0	5	0	5	0	0	2	0	2	1	245	0	0	246	15	196	0	0	211	464
03:30 PM	1	0	15	0	16	0	0	0	2	2	0	294	2	0	296	20	234	1	0	255	569
03:45 PM	0	0	7	2	9	0	0	2	2	4	0	302	2	0	304	26	298	0	0	324	641
Total	1	0	38	2	41	0	0	6	7	13	1	1079	4	0	1084	78	950	2	0	1030	2168
04:00 PM	1	0	13	0	14	0	0	0	2	2	0	228	1	0	229	23	333	0	0	356	601
04:15 PM	0	0	7	4	11	0	0	1	0	1	0	246	2	1	249	29	332	0	0	361	622
04:30 PM	1	0	13	0	14	0	0	3	1	4	0	231	2	0	233	22	278	3	0	303	554
04:45 PM	2	0	3	0	5	0	0	2	4	6	1	237	0	0	238	17	305	1	1	324	573
Total	4	0	36	4	44	0	0	6	7	13	1	942	5	1	949	91	1248	4	1	1344	2350
05:00 PM	0	0	6	1	7	0	0	3	2	5	0	276	2	0	278	19	325	1	0	345	635
05:15 PM	2	0	8	2	12	0	0	5	3	8	0	306	2	0	308	17	373	0	0	390	718
05:30 PM	2	0	15	0	17	0	0	4	2	6	0	282	4	0	286	23	362	0	0	385	694
05:45 PM	1	0	7	0	8	0	0	4	1	5	0	293	1	0	294	25	346	0	0	371	678
Total	5	0	36	3	44	0	0	16	8	24	0	1157	9	0	1166	84	1406	1	0	1491	2725
06:00 PM	2	0	8	0	10	0	0	1	4	5	0	266	6	2	274	22	351	0	0	373	662
06:15 PM	3	0	14	1	18	0	0	1	5	6	1	321	4	0	326	25	381	0	0	406	756
06:30 PM	1	0	8	0	9	0	0	0	5	5	0	288	1	0	289	23	377	1	0	401	704
06:45 PM	1	0	5	1	7	0	0	0	1	1	2	236	1	0	239	13	277	0	0	290	537
Total	7	0	35	2	44	0	0	2	15	17	3	1111	12	2	1128	83	1386	1	0	1470	2659
Grand Total	55	0	473	24	552	0	0	31	69	100	14	8553	44	3	8614	411	7436	9	1	7857	17123
Apprch %	10	0	85.7	4.3		0	0	31	69		0.2	99.3	0.5	0		5.2	94.6	0.1	0		
Total %	0.3	0	2.8	0.1	3.2	0	0	0.2	0.4	0.6	0.1	50	0.3	0	50.3	2.4	43.4	0.1	0	45.9	

Miami Gardens Drive & Wentworth Drive

File Name : Miami Gardens Drive & Wentworth Drive
Site Code : 00000000
Start Date : 5/4/2016
Page No : 2

Groups Printed- Veh - Trucks - Turns

	Wentworth Drive Southbound					Driveway Northbound					Miami Gardens Drive Westbound					Miami Gardens Drive Eastbound					
	Left	Thru	RIght	Peds/Bike	App. Total	Left	Thru	RIght	Peds/Bike	App. Total	Left	Thru	RIght	Peds/Bike	App. Total	Left	Thru	RIght	Peds/Bike	App. Total	Int. Total
Veh	51	0	459	14	524	0	0	31	46	77	2	8394	42	3	8441	344	7289	8	1	7642	16684
% Veh	92.7	0	97	58.3	94.9	0	0	100	66.7	77	14.3	98.1	95.5	100	98	83.7	98	88.9	100	97.3	97.4
Trucks	2	0	14	9	25	0	0	0	23	23	0	159	2	0	161	6	146	1	0	153	362
% Trucks	3.6	0	3	37.5	4.5	0	0	0	33.3	23	0	1.9	4.5	0	1.9	1.5	2	11.1	0	1.9	2.1
U-Turns	2	0	0	1	3	0	0	0	0	0	12	0	0	0	12	61	1	0	0	62	77
% U-Turns	3.6	0	0	4.2	0.5	0	0	0	0	0	85.7	0	0	0	0.1	14.8	0	0	0	0.8	0.4

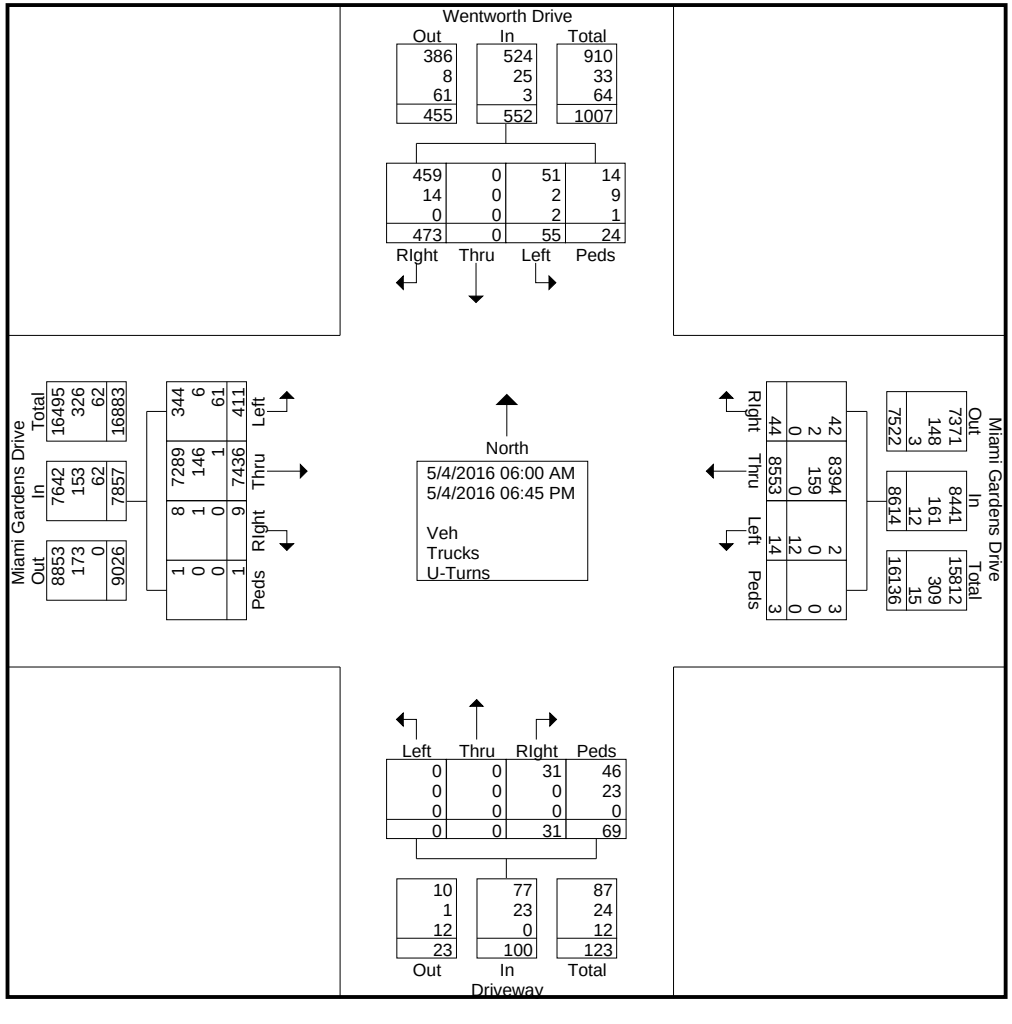

Miami Gardens Drive & Wentworth Drive

File Name : Miami Gardens Drive & Wentworth Drive
Site Code : 00000000
Start Date : 5/4/2016
Page No : 3

	Wentworth Drive Southbound					Driveway Northbound					Miami Gardens Drive Westbound					Miami Gardens Drive Eastbound					
Start Time	Left	Thru	RIght	Peds/Bike	App. Total	Left	Thru	RIght	Peds/Bike	App. Total	Left	Thru	RIght	Peds/Bike	App. Total	Left	Thru	RIght	Peds/Bike	App. Total	Int. Total
Peak Hour Analysis From 06:00 AM to 08:45 AM - Peak 1 of 1																					
Peak Hour for Entire Intersection Begins at 07:15 AM																					
07:15 AM	**4**	0	34	**3**	41	0	0	0	1	1	**2**	**488**	**3**	0	**493**	5	**248**	0	0	**253**	**788**
07:30 AM	4	0	34	0	38	0	0	0	**3**	**3**	0	393	2	0	395	5	224	0	0	229	665
07:45 AM	0	0	40	2	42	0	0	0	1	1	0	432	1	0	433	**14**	219	0	0	233	709
08:00 AM	1	0	**44**	2	**47**	0	0	0	3	3	0	440	0	0	440	11	213	0	0	224	714
Total Volume	9	0	152	7	168	0	0	0	8	8	2	1753	6	0	1761	35	904	0	0	939	2876
% App. Total	5.4	0	90.5	4.2		0	0	0	100		0.1	99.5	0.3	0		3.7	96.3	0	0		
PHF	.563	.000	.864	.583	.894	.000	.000	.000	.667	.667	.250	.898	.500	.000	.893	.625	.911	.000	.000	.928	.912

Miami Gardens Drive & Wentworth Drive

File Name : Miami Gardens Drive & Wentworth Drive
Site Code : 00000000
Start Date : 5/4/2016
Page No : 4

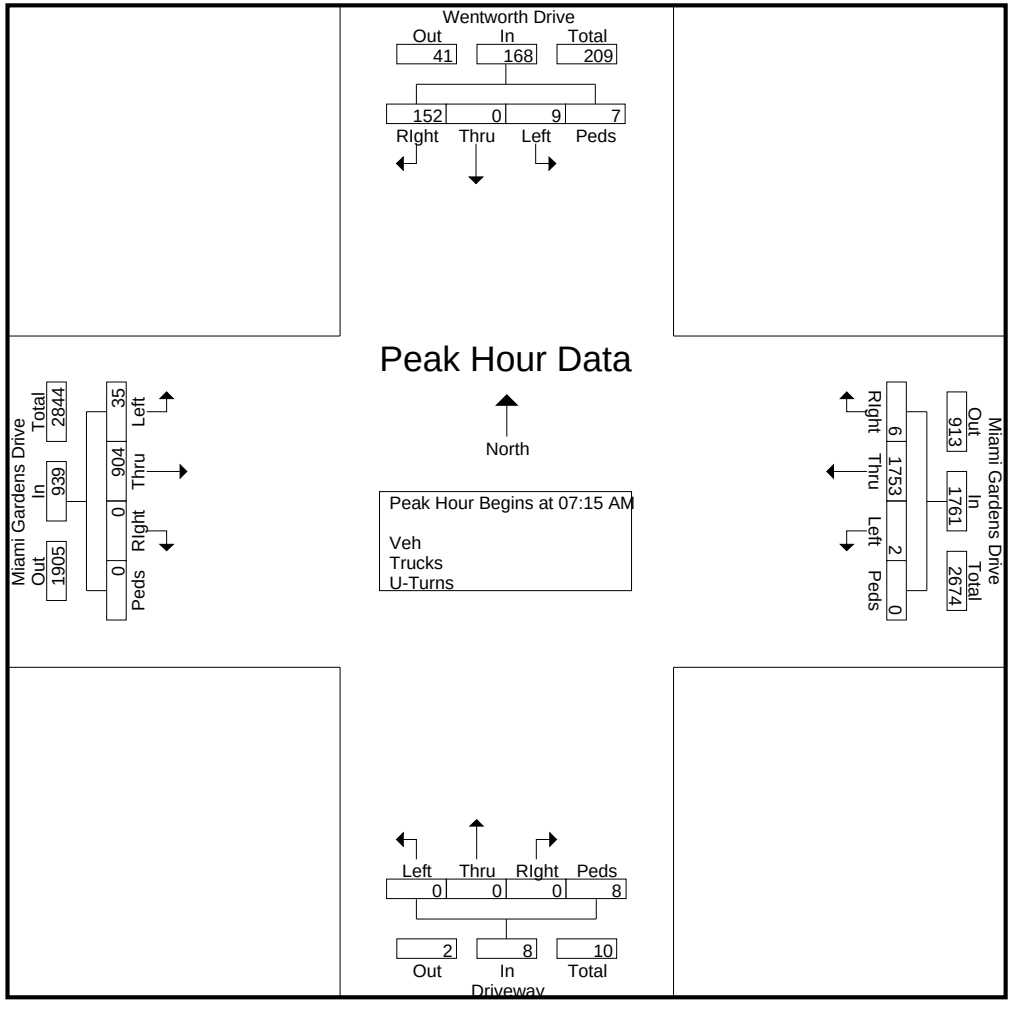

Miami Gardens Drive & Wentworth Drive

File Name : Miami Gardens Drive & Wentworth Drive
Site Code : 00000000
Start Date : 5/4/2016
Page No : 5

	Wentworth Drive Southbound					Driveway Northbound					Miami Gardens Drive Westbound					Miami Gardens Drive Eastbound					
Start Time	Left	Thru	RIght	Peds/Bike	App. Total	Left	Thru	RIght	Peds/Bike	App. Total	Left	Thru	RIght	Peds/Bike	App. Total	Left	Thru	RIght	Peds/Bike	App. Total	Int. Total
Peak Hour Analysis From 03:00 PM to 06:45 PM - Peak 1 of 1																					
Peak Hour for Entire Intersection Begins at 05:45 PM																					
05:45 PM	1	0	7	0	8	0	0	**4**	1	5	0	293	1	0	294	**25**	346	0	0	371	678
06:00 PM	2	0	8	0	10	0	0	1	4	5	0	266	**6**	**2**	274	22	351	0	0	373	662
06:15 PM	**3**	0	**14**	**1**	**18**	0	0	1	**5**	**6**	**1**	**321**	4	0	**326**	25	**381**	0	0	**406**	**756**
06:30 PM	1	0	8	0	9	0	0	0	5	5	0	288	1	0	289	23	377	**1**	0	401	704
Total Volume	7	0	37	1	45	0	0	6	15	21	1	1168	12	2	1183	95	1455	1	0	1551	2800
% App. Total	15.6	0	82.2	2.2		0	0	28.6	71.4		0.1	98.7	1	0.2		6.1	93.8	0.1	0		
PHF	.583	.000	.661	.250	.625	.000	.000	.375	.750	.875	.250	.910	.500	.250	.907	.950	.955	.250	.000	.955	.926

Miami Gardens Drive & Wentworth Drive

File Name : Miami Gardens Drive & Wentworth Drive
Site Code : 00000000
Start Date : 5/4/2016
Page No : 6

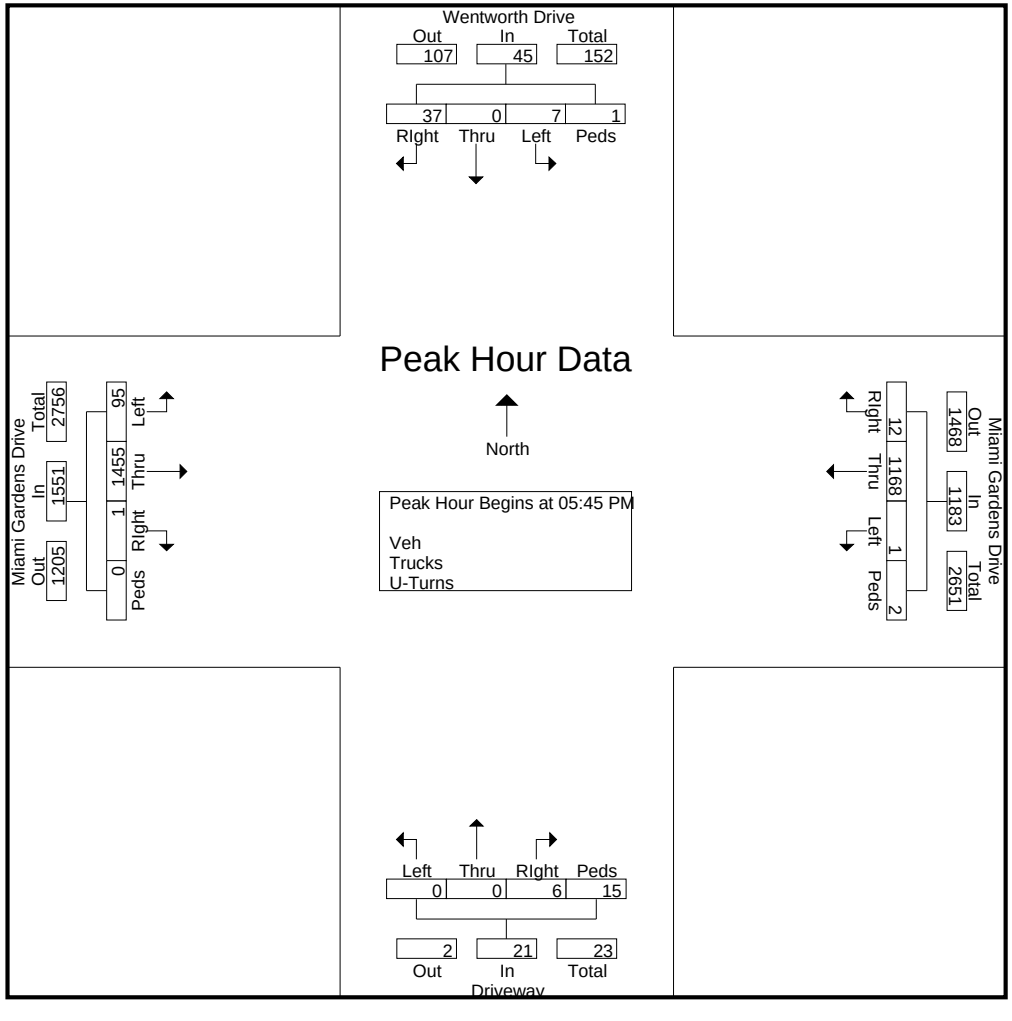

Miami Gardens Drive & Oakmont Drive

File Name : Miami Gardens Drive & Oakmont Drive
Site Code : 00000000
Start Date : 5/4/2016
Page No : 1

Groups Printed- Trucks

	Oakmont Dr Southbound					Oakmont Dr Northbound					Miami Gardens Drive Westbound					Miami Gardens Drive Eastbound					
Start Time	Left	Thru	RIght	Bikes	App. Total	Left	Thru	RIght	Bikes	App. Total	Left	Thru	RIght	Bikes	App. Total	Left	Thru	RIght	Bikes	App. Total	Int. Total
06:00 AM	0	0	0	0	0	0	0	0	0	0	0	7	0	0	7	0	5	0	0	5	12
06:15 AM	0	0	0	0	0	0	0	0	0	0	0	10	2	0	12	2	8	0	0	10	22
06:30 AM	3	0	0	0	3	0	0	0	0	0	1	8	5	0	14	0	10	0	0	10	27
06:45 AM	1	0	0	0	1	0	0	0	0	0	0	1	1	0	2	2	13	0	0	15	18
Total	4	0	0	0	4	0	0	0	0	0	1	26	8	0	35	4	36	0	0	40	79
07:00 AM	1	0	0	1	2	0	0	0	4	4	0	4	1	0	5	0	3	0	0	3	14
07:15 AM	1	0	0	1	2	0	0	0	1	1	0	13	1	0	14	0	4	0	0	4	21
07:30 AM	0	0	0	0	0	1	0	0	0	1	0	4	2	0	6	0	5	0	0	5	12
07:45 AM	0	0	0	1	1	4	0	0	0	4	1	5	1	0	7	0	5	0	0	5	17
Total	2	0	0	3	5	5	0	0	5	10	1	26	5	0	32	0	17	0	0	17	64
08:00 AM	0	0	0	0	0	0	0	0	1	1	0	7	1	0	8	0	12	0	0	12	21
08:15 AM	0	0	2	0	2	0	0	0	0	0	0	11	0	0	11	0	4	0	0	4	17
08:30 AM	0	0	0	0	0	0	0	0	1	1	0	11	0	0	11	0	4	0	0	4	16
08:45 AM	0	0	0	0	0	0	0	0	0	0	0	3	0	0	3	0	2	0	0	2	5
Total	0	0	2	0	2	0	0	0	2	2	0	32	1	0	33	0	22	0	0	22	59
*** BREAK ***																					
03:00 PM	0	0	1	0	1	0	0	0	1	1	0	10	2	0	12	0	5	0	0	5	19
03:15 PM	1	0	0	0	1	0	0	0	0	0	0	11	0	0	11	0	3	0	0	3	15
03:30 PM	0	0	0	0	0	0	0	0	0	0	1	10	0	0	11	0	3	1	0	4	15
03:45 PM	0	0	0	0	0	1	0	0	0	1	0	5	0	0	5	0	9	0	0	9	15
Total	1	0	1	0	2	1	0	0	1	2	1	36	2	0	39	0	20	1	0	21	64
04:00 PM	1	0	0	0	1	0	0	0	0	0	0	5	2	0	7	0	8	0	0	8	16
04:15 PM	0	0	0	0	0	0	0	0	0	0	0	4	0	0	4	0	5	0	0	5	9
04:30 PM	1	0	1	0	2	0	0	0	0	0	0	5	1	0	6	0	5	0	0	5	13
04:45 PM	0	0	0	0	0	0	0	0	0	0	0	6	0	0	6	0	6	0	0	6	12
Total	2	0	1	0	3	0	0	0	0	0	0	20	3	0	23	0	24	0	0	24	50
05:00 PM	0	0	0	0	0	0	0	0	2	2	0	4	0	0	4	0	2	0	0	2	8
05:15 PM	0	0	0	2	2	0	0	0	0	0	0	2	1	0	3	0	2	0	0	2	7
05:30 PM	0	0	0	0	0	0	0	0	0	0	1	2	0	0	3	0	3	0	2	5	8
05:45 PM	0	0	0	0	0	0	0	0	0	0	0	2	0	0	2	0	5	0	0	5	7
Total	0	0	0	2	2	0	0	0	2	2	1	10	1	0	12	0	12	0	2	14	30
06:00 PM	0	0	0	0	0	0	0	0	0	0	0	1	0	0	1	0	1	0	0	1	2
06:15 PM	0	0	0	0	0	0	0	0	0	0	0	0	0	0	0	0	2	0	0	2	2
06:30 PM	1	0	0	0	1	0	0	0	4	4	0	2	0	0	2	0	3	0	0	3	10
06:45 PM	0	0	0	1	1	0	0	0	0	0	0	4	0	0	4	0	0	0	0	0	5
Total	1	0	0	1	2	0	0	0	4	4	0	7	0	0	7	0	6	0	0	6	19
Grand Total	10	0	4	6	20	6	0	0	14	20	4	157	20	0	181	4	137	1	2	144	365
Apprch %	50	0	20	30		30	0	0	70		2.2	86.7	11	0		2.8	95.1	0.7	1.4		
Total %	2.7	0	1.1	1.6	5.5	1.6	0	0	3.8	5.5	1.1	43	5.5	0	49.6	1.1	37.5	0.3	0.5	39.5	

Miami Gardens Drive & Oakmont Drive

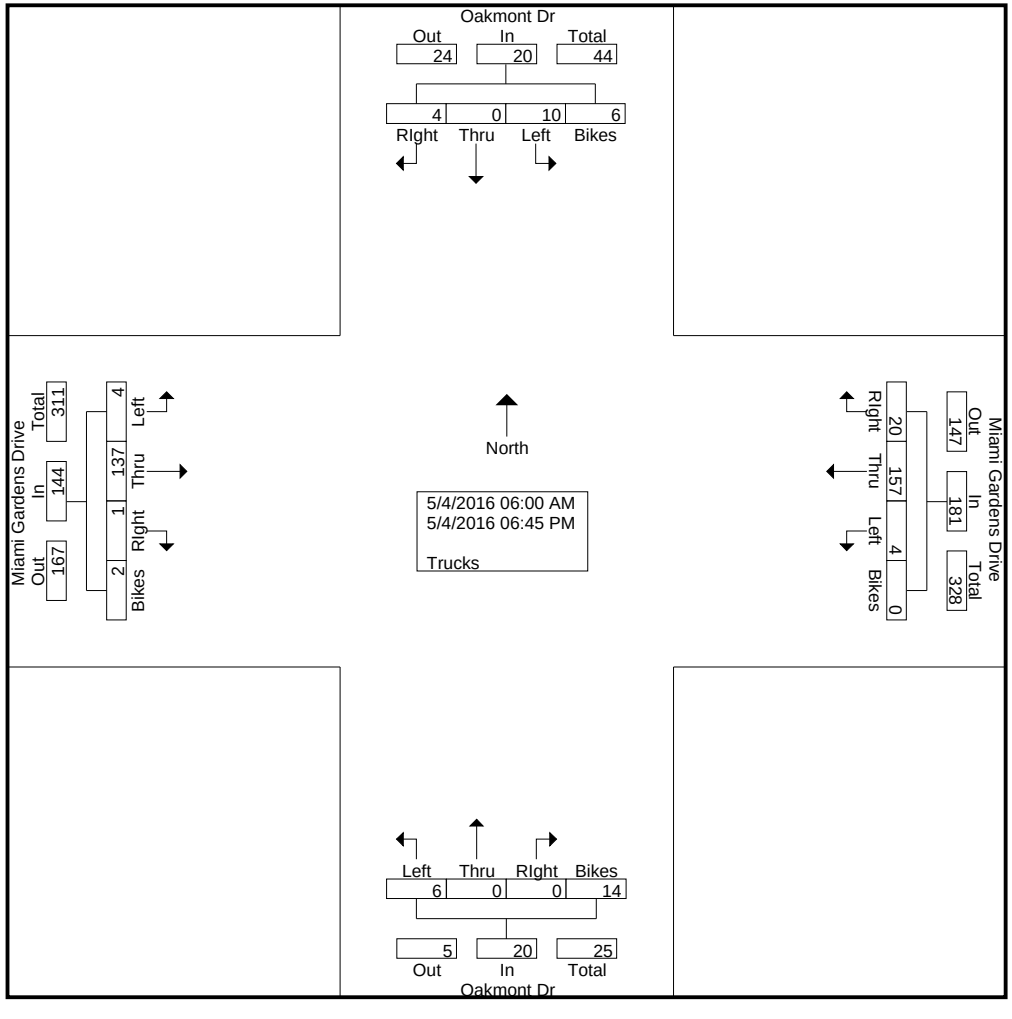

Miami Gardens Drive & Oakmont Drive

File Name : Miami Gardens Drive & Oakmont Drive
Site Code : 00000000
Start Date : 5/4/2016
Page No : 3

	Oakmont Dr Southbound					Oakmont Dr Northbound					Miami Gardens Drive Westbound					Miami Gardens Drive Eastbound					
Start Time	Left	Thru	RIght	Bikes	App. Total	Left	Thru	RIght	Bikes	App. Total	Left	Thru	RIght	Bikes	App. Total	Left	Thru	RIght	Bikes	App. Total	Int. Total
Peak Hour Analysis From 06:00 AM to 08:45 AM - Peak 1 of 1																					
Peak Hour for Entire Intersection Begins at 06:15 AM																					
06:15 AM	0	0	0	0	0	0	0	0	0	0	0	**10**	2	0	12	**2**	8	0	0	10	22
06:30 AM	**3**	0	0	0	**3**	0	0	0	0	0	**1**	8	**5**	0	**14**	0	10	0	0	10	**27**
06:45 AM	1	0	0	0	1	0	0	0	0	0	0	1	1	0	2	2	**13**	0	0	**15**	18
07:00 AM	1	0	0	**1**	2	0	0	0	**4**	**4**	0	4	1	0	5	0	3	0	0	3	14
Total Volume	5	0	0	1	6	0	0	0	4	4	1	23	9	0	33	4	34	0	0	38	81
% App. Total	83.3	0	0	16.7		0	0	0	100		3	69.7	27.3	0		10.5	89.5	0	0		
PHF	.417	.000	.000	.250	.500	.000	.000	.000	.250	.250	.250	.575	.450	.000	.589	.500	.654	.000	.000	.633	.750

Miami Gardens Drive & Oakmont Drive

File Name : Miami Gardens Drive & Oakmont Drive
Site Code : 00000000
Start Date : 5/4/2016
Page No : 4

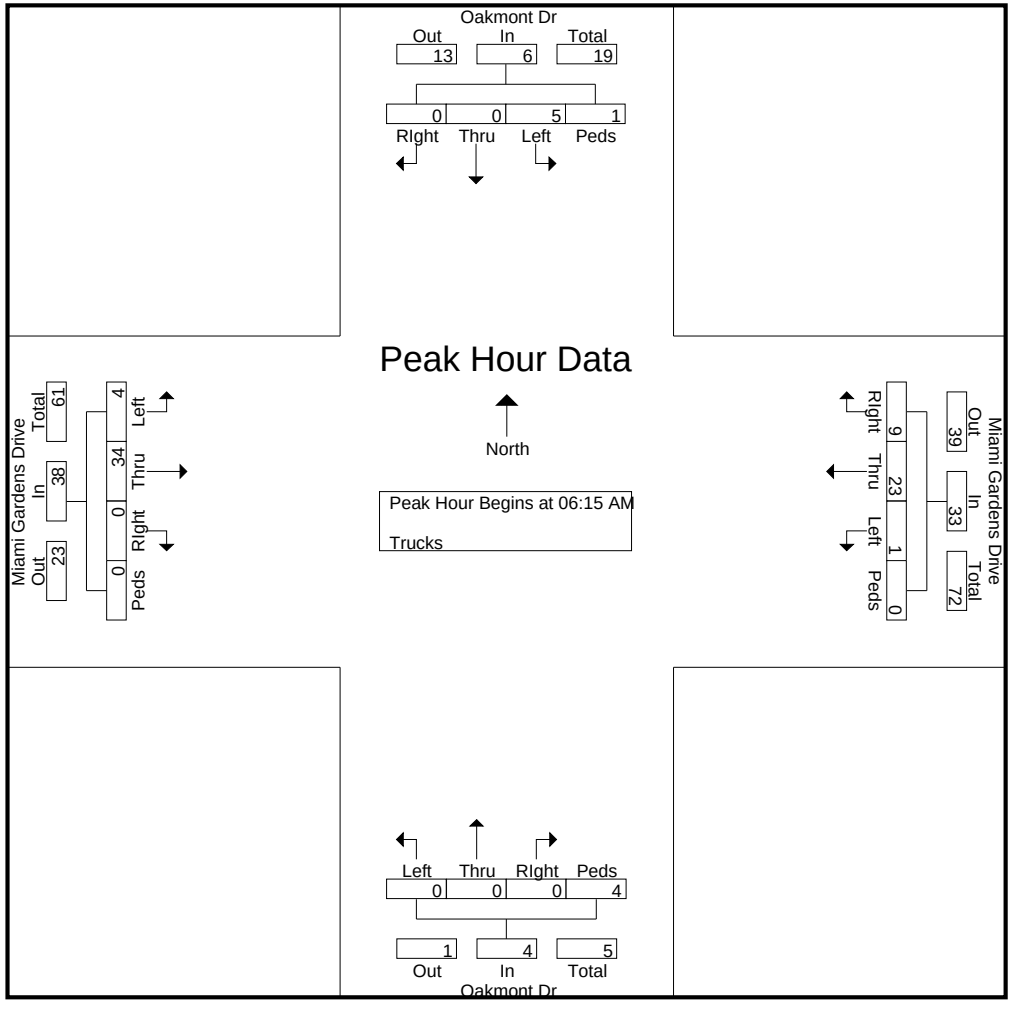

Miami Gardens Drive & Oakmont Drive

File Name : Miami Gardens Drive & Oakmont Drive
Site Code : 00000000
Start Date : 5/4/2016
Page No : 5

	Oakmont Dr Southbound					Oakmont Dr Northbound					Miami Gardens Drive Westbound					Miami Gardens Drive Eastbound					
Start Time	Left	Thru	RIght	Bikes	App. Total	Left	Thru	RIght	Bikes	App. Total	Left	Thru	RIght	Bikes	App. Total	Left	Thru	RIght	Bikes	App. Total	Int. Total
Peak Hour Analysis From 03:00 PM to 06:45 PM - Peak 1 of 1																					
Peak Hour for Entire Intersection Begins at 03:00 PM																					
03:00 PM	0	0	**1**	0	**1**	0	0	0	**1**	**1**	0	10	**2**	0	**12**	0	5	0	0	5	**19**
03:15 PM	**1**	0	0	0	1	0	0	0	0	0	0	**11**	0	0	11	0	3	0	0	3	15
03:30 PM	0	0	0	0	0	0	0	0	0	0	**1**	10	0	0	11	0	3	**1**	0	4	15
03:45 PM	0	0	0	0	0	**1**	0	0	0	1	0	5	0	0	5	0	**9**	0	0	**9**	15
Total Volume	1	0	1	0	2	1	0	0	1	2	1	36	2	0	39	0	20	1	0	21	64
% App. Total	50	0	50	0		50	0	0	50		2.6	92.3	5.1	0		0	95.2	4.8	0		
PHF	.250	.000	.250	.000	.500	.250	.000	.000	.250	.500	.250	.818	.250	.000	.813	.000	.556	.250	.000	.583	.842

Miami Gardens Drive & Oakmont Drive

File Name : Miami Gardens Drive & Oakmont Drive
Site Code : 00000000
Start Date : 5/4/2016
Page No : 6

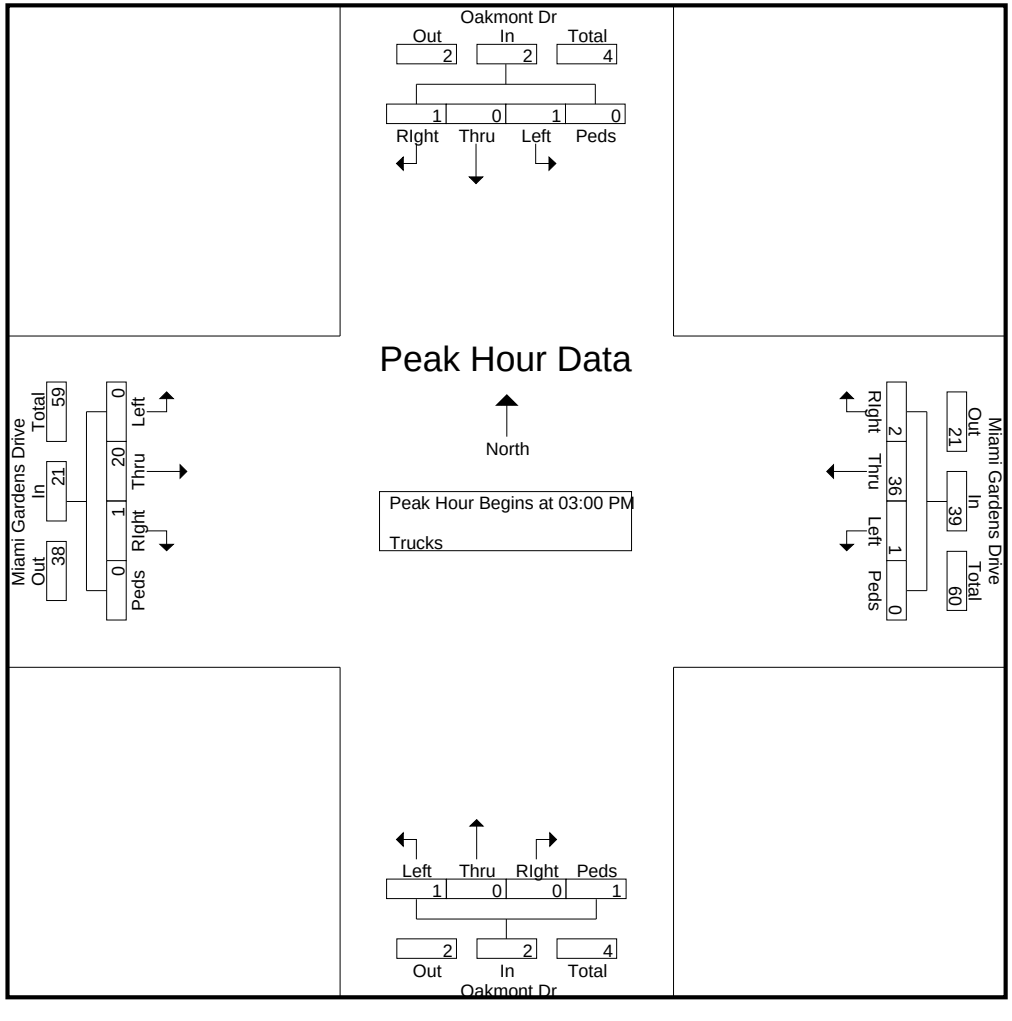

Miami Gardens Drive & Oakmont Drive

File Name : Miami Gardens Drive & Oakmont Drive
Site Code : 00000000
Start Date : 5/4/2016
Page No : 1

Groups Printed- Turns

	Oakmont Dr Southbound					Oakmont Dr Northbound					Miami Gardens Drive Westbound					Miami Gardens Drive Eastbound					
Start Time	Left	Thru	RIght	Peds/Bike	App. Total	Left	Thru	RIght	Peds/Bike	App. Total	Left	Thru	RIght	Peds/Bike	App. Total	Left	Thru	RIght	Peds/Bike	App. Total	Int. Total
06:00 AM	0	0	0	0	0	0	0	0	0	0	2	0	0	0	2	0	0	0	0	0	2
06:15 AM	0	0	0	0	0	0	0	0	0	0	1	0	0	0	1	0	0	0	0	0	1
06:30 AM	0	0	0	0	0	0	0	0	0	0	1	0	0	0	1	0	0	0	0	0	1
06:45 AM	0	0	0	0	0	0	0	0	0	0	1	0	0	0	1	2	0	0	0	2	3
Total	0	0	0	0	0	0	0	0	0	0	5	0	0	0	5	2	0	0	0	2	7
07:00 AM	0	0	0	0	0	0	0	0	0	0	2	0	0	0	2	0	0	0	0	0	2
07:15 AM	0	0	0	0	0	0	0	0	0	0	1	0	0	0	1	0	0	0	0	0	1
07:30 AM	0	0	0	0	0	0	0	0	0	0	1	0	0	0	1	0	0	0	0	0	1
*** BREAK ***																					
Total	0	0	0	0	0	0	0	0	0	0	4	0	0	0	4	0	0	0	0	0	4
08:00 AM	0	0	0	0	0	0	0	0	0	0	0	0	0	0	0	1	0	0	0	1	1
08:15 AM	0	0	0	0	0	0	0	0	0	0	1	0	0	0	1	1	0	0	0	1	2
08:30 AM	0	0	0	0	0	0	0	0	0	0	2	0	0	0	2	1	0	0	0	1	3
08:45 AM	0	0	0	0	0	0	0	0	0	0	2	0	0	0	2	0	0	0	0	0	2
Total	0	0	0	0	0	0	0	0	0	0	5	0	0	0	5	3	0	0	0	3	8
*** BREAK ***																					
03:00 PM	0	0	0	0	0	0	0	0	0	0	1	0	0	0	1	0	0	0	0	0	1
03:15 PM	0	0	0	0	0	0	0	0	0	0	3	0	0	0	3	2	0	0	0	2	5
*** BREAK ***																					
03:45 PM	0	0	0	0	0	0	0	0	0	0	5	0	0	0	5	0	0	0	0	0	5
Total	0	0	0	0	0	0	0	0	0	0	9	0	0	0	9	2	0	0	0	2	11
04:00 PM	0	0	0	0	0	0	0	0	0	0	1	0	0	0	1	1	0	0	0	1	2
*** BREAK ***																					
04:30 PM	0	0	0	0	0	0	0	0	0	0	1	0	0	0	1	2	0	0	0	2	3
04:45 PM	0	0	0	0	0	0	0	0	0	0	0	0	0	0	0	1	0	0	0	1	1
Total	0	0	0	0	0	0	0	0	0	0	2	0	0	0	2	4	0	0	0	4	6
05:00 PM	0	0	0	0	0	0	0	0	0	0	4	0	0	0	4	0	0	0	0	0	4
05:15 PM	0	0	0	0	0	0	0	0	0	0	3	0	0	0	3	1	0	0	0	1	4
05:30 PM	0	0	0	0	0	0	0	0	0	0	1	0	0	0	1	3	0	0	0	3	4
05:45 PM	0	0	0	0	0	0	0	0	0	0	1	0	0	0	1	1	0	0	0	1	2
Total	0	0	0	0	0	0	0	0	0	0	9	0	0	0	9	5	0	0	0	5	14
06:00 PM	0	0	0	0	0	0	0	0	0	0	2	0	0	0	2	1	0	0	0	1	3
06:15 PM	0	0	0	0	0	0	0	0	0	0	2	0	0	0	2	2	0	0	0	2	4
06:30 PM	0	0	0	0	0	0	0	0	0	0	0	0	0	0	0	2	0	0	0	2	2
06:45 PM	0	0	0	0	0	0	0	0	0	0	0	0	0	0	0	3	0	0	0	3	3
Total	0	0	0	0	0	0	0	0	0	0	4	0	0	0	4	8	0	0	0	8	12
Grand Total	0	0	0	0	0	0	0	0	0	0	38	0	0	0	38	24	0	0	0	24	62
Apprch %	0	0	0	0		0	0	0	0		100	0	0	0		100	0	0	0		
Total %	0	0	0	0	0	0	0	0	0	0	61.3	0	0	0	61.3	38.7	0	0	0	38.7	

Miami Gardens Drive & Oakmont Drive

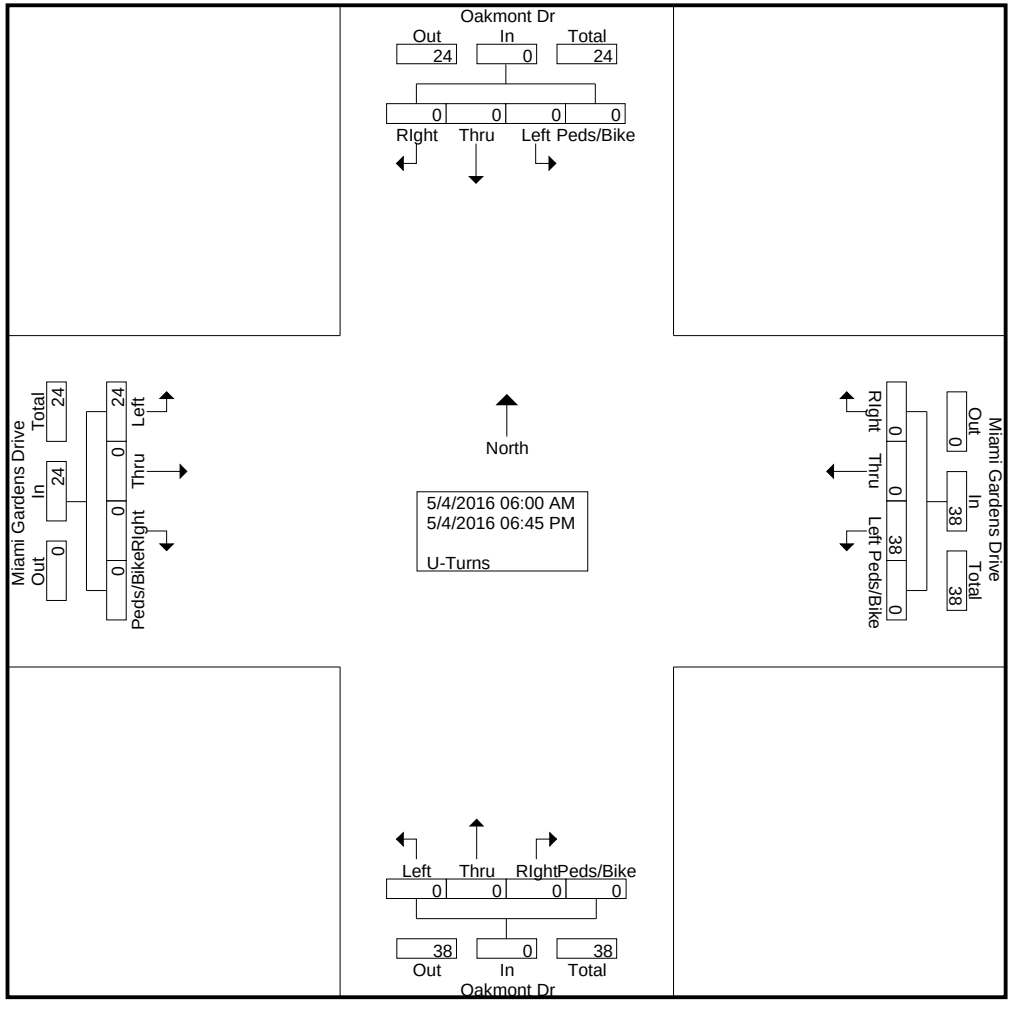

Miami Gardens Drive & Oakmont Drive

File Name : Miami Gardens Drive & Oakmont Drive
Site Code : 00000000
Start Date : 5/4/2016
Page No : 3

	Oakmont Dr Southbound					Oakmont Dr Northbound					Miami Gardens Drive Westbound					Miami Gardens Drive Eastbound					
Start Time	Left	Thru	RIght	Peds/Bike	App. Total	Left	Thru	RIght	Peds/Bike	App. Total	Left	Thru	RIght	Peds/Bike	App. Total	Left	Thru	RIght	Peds/Bike	App. Total	Int. Total
Peak Hour Analysis From 06:00 AM to 08:45 AM - Peak 1 of 1																					
Peak Hour for Entire Intersection Begins at 08:00 AM																					
08:00 AM	0	0	0	0	0	0	0	0	0	0	0	0	0	0	0	**1**	0	0	0	**1**	1
08:15 AM	0	0	0	0	0	0	0	0	0	0	1	0	0	0	1	1	0	0	0	1	2
08:30 AM	0	0	0	0	0	0	0	0	0	0	**2**	0	0	0	**2**	1	0	0	0	1	**3**
08:45 AM	0	0	0	0	0	0	0	0	0	0	2	0	0	0	2	0	0	0	0	0	2
Total Volume	0	0	0	0	0	0	0	0	0	0	5	0	0	0	5	3	0	0	0	3	8
% App. Total	0	0	0	0		0	0	0	0		100	0	0	0		100	0	0	0		
PHF	.000	.000	.000	.000	.000	.000	.000	.000	.000	.000	.625	.000	.000	.000	.625	.750	.000	.000	.000	.750	.667

Miami Gardens Drive & Oakmont Drive

File Name : Miami Gardens Drive & Oakmont Drive
Site Code : 00000000
Start Date : 5/4/2016
Page No : 4

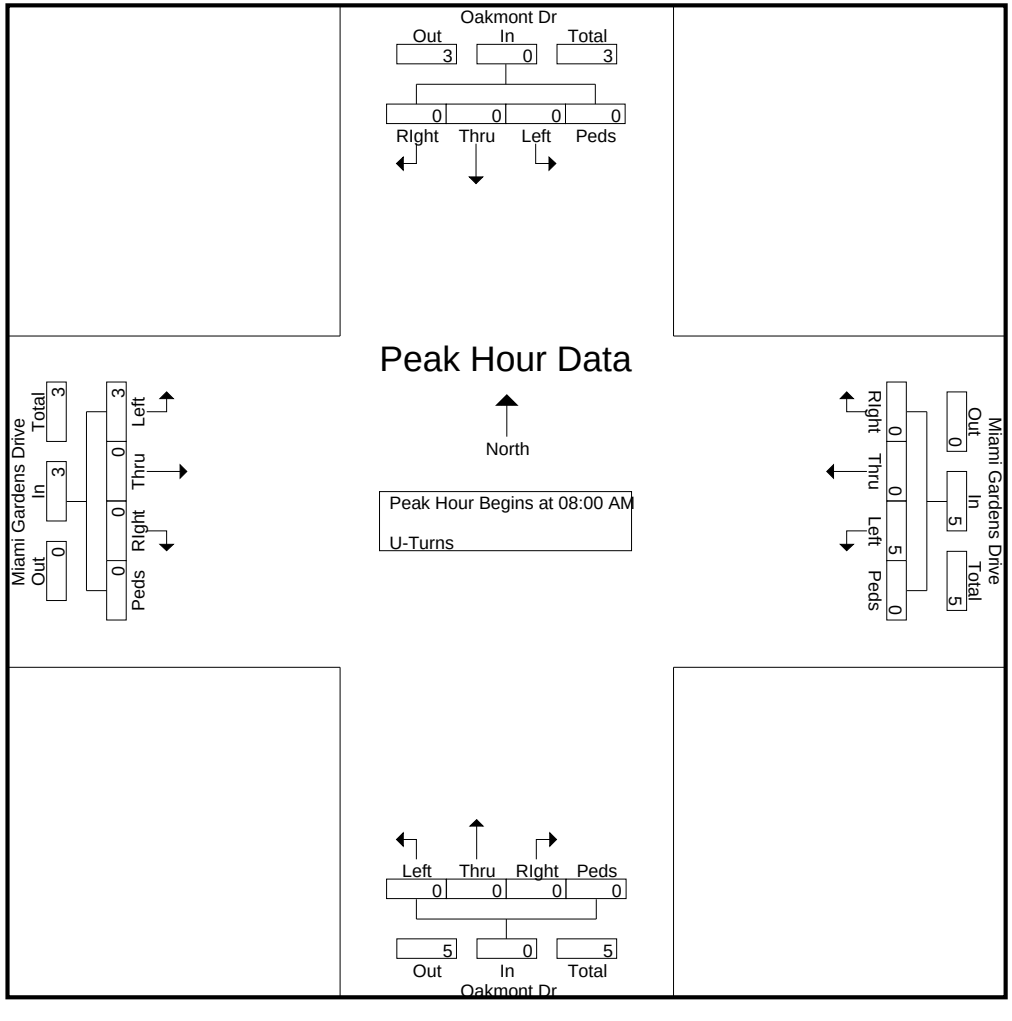

Miami Gardens Drive & Oakmont Drive

File Name : Miami Gardens Drive & Oakmont Drive
Site Code : 00000000
Start Date : 5/4/2016
Page No : 5

	Oakmont Dr Southbound					Oakmont Dr Northbound					Miami Gardens Drive Westbound					Miami Gardens Drive Eastbound					
Start Time	Left	Thru	RIght	Peds/Bike	App. Total	Left	Thru	RIght	Peds/Bike	App. Total	Left	Thru	RIght	Peds/Bike	App. Total	Left	Thru	RIght	Peds/Bike	App. Total	Int. Total
Peak Hour Analysis From 03:00 PM to 06:45 PM - Peak 1 of 1																					
Peak Hour for Entire Intersection Begins at 05:00 PM																					
05:00 PM	0	0	0	0	0	0	0	0	0	0	**4**	0	0	0	**4**	0	0	0	0	0	**4**
05:15 PM	0	0	0	0	0	0	0	0	0	0	3	0	0	0	3	1	0	0	0	1	4
05:30 PM	0	0	0	0	0	0	0	0	0	0	1	0	0	0	1	**3**	0	0	0	**3**	4
05:45 PM	0	0	0	0	0	0	0	0	0	0	1	0	0	0	1	1	0	0	0	1	2
Total Volume	0	0	0	0	0	0	0	0	0	0	9	0	0	0	9	5	0	0	0	5	14
% App. Total	0	0	0	0		0	0	0	0		100	0	0	0		100	0	0	0		
PHF	.000	.000	.000	.000	.000	.000	.000	.000	.000	.000	.563	.000	.000	.000	.563	.417	.000	.000	.000	.417	.875

Miami Gardens Drive & Oakmont Drive

File Name : Miami Gardens Drive & Oakmont Drive
Site Code : 00000000
Start Date : 5/4/2016
Page No : 6

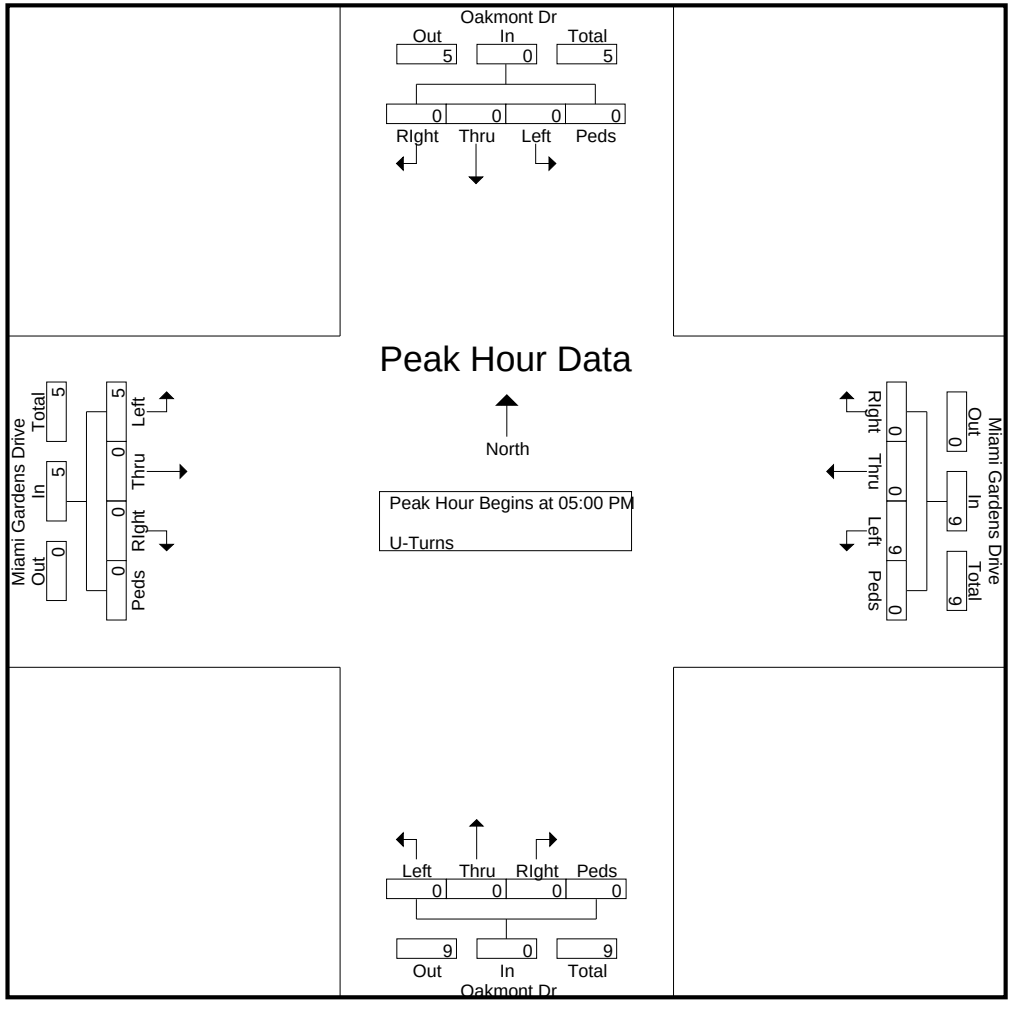

Miami Gardens Drive & Oakmont Drive

File Name : Miami Gardens Drive & Oakmont Drive
Site Code : 00000000
Start Date : 5/4/2016
Page No : 1

Groups Printed- Veh - Trucks - Turns

	Oakmont Dr Southbound					Oakmont Dr Northbound					Miami Gardens Drive Westbound					Miami Gardens Drive Eastbound					
Start Time	Left	Thru	RIght	Peds/Bike	App. Total	Left	Thru	RIght	Peds/Bike	App. Total	Left	Thru	RIght	Peds/Bike	App. Total	Left	Thru	RIght	Peds/Bike	App. Total	Int. Total
06:00 AM	8	0	8	0	16	2	0	1	0	3	4	83	2	0	89	1	109	0	0	110	218
06:15 AM	8	0	6	1	15	8	1	0	1	10	4	185	15	0	204	2	126	1	0	129	358
06:30 AM	21	0	4	0	25	6	0	6	0	12	8	348	19	0	375	2	167	1	0	170	582
06:45 AM	37	0	17	0	54	9	0	3	0	12	4	418	7	0	429	12	227	0	0	239	734
Total	74	0	35	1	110	25	1	10	1	37	20	1034	43	0	1097	17	629	2	0	648	1892
07:00 AM	13	0	5	2	20	21	0	0	4	25	12	392	8	0	412	1	237	0	0	238	695
07:15 AM	13	0	14	1	28	26	2	4	2	34	3	437	3	0	443	7	262	4	0	273	778
07:30 AM	10	5	2	0	17	27	1	4	2	34	5	375	10	0	390	8	191	16	0	215	656
07:45 AM	7	15	6	1	29	38	1	4	4	47	1	380	7	0	388	7	192	9	0	208	672
Total	43	20	27	4	94	112	4	12	12	140	21	1584	28	0	1633	23	882	29	0	934	2801
08:00 AM	19	6	14	2	41	24	1	11	1	37	2	412	4	0	418	15	196	16	0	227	723
08:15 AM	14	3	8	0	25	28	4	7	0	39	16	378	7	0	401	12	235	6	0	253	718
08:30 AM	12	0	10	0	22	11	0	12	1	24	12	338	7	0	357	6	229	10	0	245	648
08:45 AM	16	2	9	1	28	10	1	6	1	18	16	293	5	1	315	3	217	1	0	221	582
Total	61	11	41	3	116	73	6	36	3	118	46	1421	23	1	1491	36	877	33	0	946	2671
*** BREAK ***																					
03:00 PM	15	0	4	0	19	7	4	14	4	29	14	233	19	0	266	5	234	4	0	243	557
03:15 PM	8	1	5	0	14	15	4	6	0	25	14	241	14	0	269	6	200	4	0	210	518
03:30 PM	10	3	5	0	18	15	2	14	0	31	9	286	12	0	307	7	211	4	0	222	578
03:45 PM	6	0	5	2	13	10	2	13	1	26	20	284	6	0	310	5	308	9	0	322	671
Total	39	4	19	2	64	47	12	47	5	111	57	1044	51	0	1152	23	953	21	0	997	2324
04:00 PM	6	2	1	1	10	18	5	14	1	38	12	211	12	0	235	8	343	8	0	359	642
04:15 PM	13	0	5	5	23	18	6	12	0	36	8	228	24	0	260	9	315	9	0	333	652
04:30 PM	12	1	8	0	21	22	0	8	0	30	15	211	24	1	251	12	289	8	0	309	611
04:45 PM	11	3	7	0	21	14	4	16	3	37	14	231	22	0	267	9	285	11	0	305	630
Total	42	6	21	6	75	72	15	50	4	141	49	881	82	1	1013	38	1232	36	0	1306	2535
05:00 PM	15	0	3	0	18	18	7	14	2	41	22	271	22	0	315	9	332	11	2	354	728
05:15 PM	13	0	5	2	20	22	2	11	0	35	19	288	18	0	325	9	359	10	3	381	761
05:30 PM	14	0	6	0	20	16	0	18	0	34	13	281	23	0	317	18	340	10	3	371	742
05:45 PM	11	1	8	0	20	17	4	18	0	39	24	292	32	0	348	14	329	12	0	355	762
Total	53	1	22	2	78	73	13	61	2	149	78	1132	95	0	1305	50	1360	43	8	1461	2993
06:00 PM	12	2	11	0	25	18	11	22	0	51	24	266	23	0	313	8	363	16	0	387	776
06:15 PM	14	1	10	1	26	18	2	17	2	39	12	306	34	0	352	21	373	9	0	403	820
06:30 PM	19	2	3	0	24	19	2	16	4	41	19	281	32	0	332	12	363	18	0	393	790
06:45 PM	30	1	7	1	39	23	2	12	0	37	18	221	22	0	261	20	268	6	0	294	631
Total	75	6	31	2	114	78	17	67	6	168	73	1074	111	0	1258	61	1367	49	0	1477	3017
Grand Total	387	48	196	20	651	480	68	283	33	864	344	8170	433	2	8949	248	7300	213	8	7769	18233
Apprch %	59.4	7.4	30.1	3.1		55.6	7.9	32.8	3.8		3.8	91.3	4.8	0		3.2	94	2.7	0.1		
Total %	2.1	0.3	1.1	0.1	3.6	2.6	0.4	1.6	0.2	4.7	1.9	44.8	2.4	0	49.1	1.4	40	1.2	0	42.6	

Miami Gardens Drive & Oakmont Drive

File Name : Miami Gardens Drive & Oakmont Drive
Site Code : 00000000
Start Date : 5/4/2016
Page No : 2

Groups Printed- Veh - Trucks - Turns

	Oakmont Dr Southbound					Oakmont Dr Northbound					Miami Gardens Drive Westbound					Miami Gardens Drive Eastbound					
	Left	Thru	RIght	Peds/Bike	App. Total	Left	Thru	RIght	Peds/Bike	App. Total	Left	Thru	RIght	Peds/Bike	App. Total	Left	Thru	RIght	Peds/Bike	App. Total	Int. Total
Veh	377	48	192	14	631	474	68	283	19	844	302	8013	413	2	8730	220	7163	212	6	7601	17806
% Veh	97.4	100	98	70	96.9	98.8	100	100	57.6	97.7	87.8	98.1	95.4	100	97.6	88.7	98.1	99.5	75	97.8	97.7
Trucks	10	0	4	6	20	6	0	0	14	20	4	157	20	0	181	4	137	1	2	144	365
% Trucks	2.6	0	2	30	3.1	1.2	0	0	42.4	2.3	1.2	1.9	4.6	0	2	1.6	1.9	0.5	25	1.9	2
U-Turns	0	0	0	0	0	0	0	0	0	0	38	0	0	0	38	24	0	0	0	24	62
% U-Turns	0	0	0	0	0	0	0	0	0	0	11	0	0	0	0.4	9.7	0	0	0	0.3	0.3

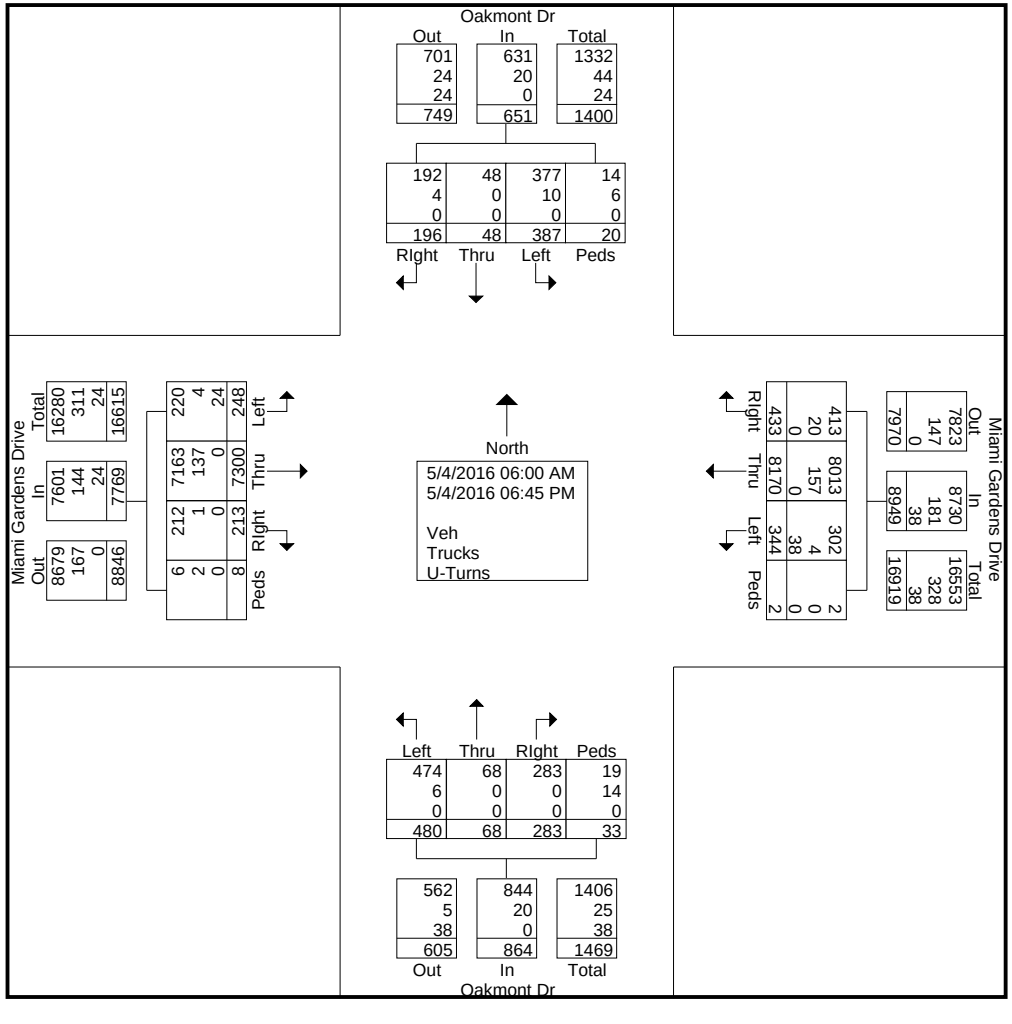

Miami Gardens Drive & Oakmont Drive

File Name : Miami Gardens Drive & Oakmont Drive
Site Code : 00000000
Start Date : 5/4/2016
Page No : 3

	Oakmont Dr Southbound					Oakmont Dr Northbound					Miami Gardens Drive Westbound					Miami Gardens Drive Eastbound					
Start Time	Left	Thru	RIght	Peds/Bike	App. Total	Left	Thru	RIght	Peds/Bike	App. Total	Left	Thru	RIght	Peds/Bike	App. Total	Left	Thru	RIght	Peds/Bike	App. Total	Int. Total
Peak Hour Analysis From 06:00 AM to 08:45 AM - Peak 1 of 1																					
Peak Hour for Entire Intersection Begins at 06:45 AM																					
06:45 AM	**37**	0	**17**	0	**54**	9	0	3	0	12	4	418	7	0	429	**12**	227	0	0	239	734
07:00 AM	13	0	5	**2**	20	21	0	0	**4**	25	**12**	392	8	0	412	1	237	0	0	238	695
07:15 AM	13	0	14	1	28	26	**2**	**4**	2	**34**	3	**437**	3	0	**443**	7	**262**	4	0	**273**	**778**
07:30 AM	10	**5**	2	0	17	**27**	1	4	2	34	5	375	**10**	0	390	8	191	**16**	0	215	656
Total Volume	73	5	38	3	119	83	3	11	8	105	24	1622	28	0	1674	28	917	20	0	965	2863
% App. Total	61.3	4.2	31.9	2.5		79	2.9	10.5	7.6		1.4	96.9	1.7	0		2.9	95	2.1	0		
PHF	.493	.250	.559	.375	.551	.769	.375	.688	.500	.772	.500	.928	.700	.000	.945	.583	.875	.313	.000	.884	.920

Miami Gardens Drive & Oakmont Drive

File Name : Miami Gardens Drive & Oakmont Drive
Site Code : 00000000
Start Date : 5/4/2016
Page No : 4

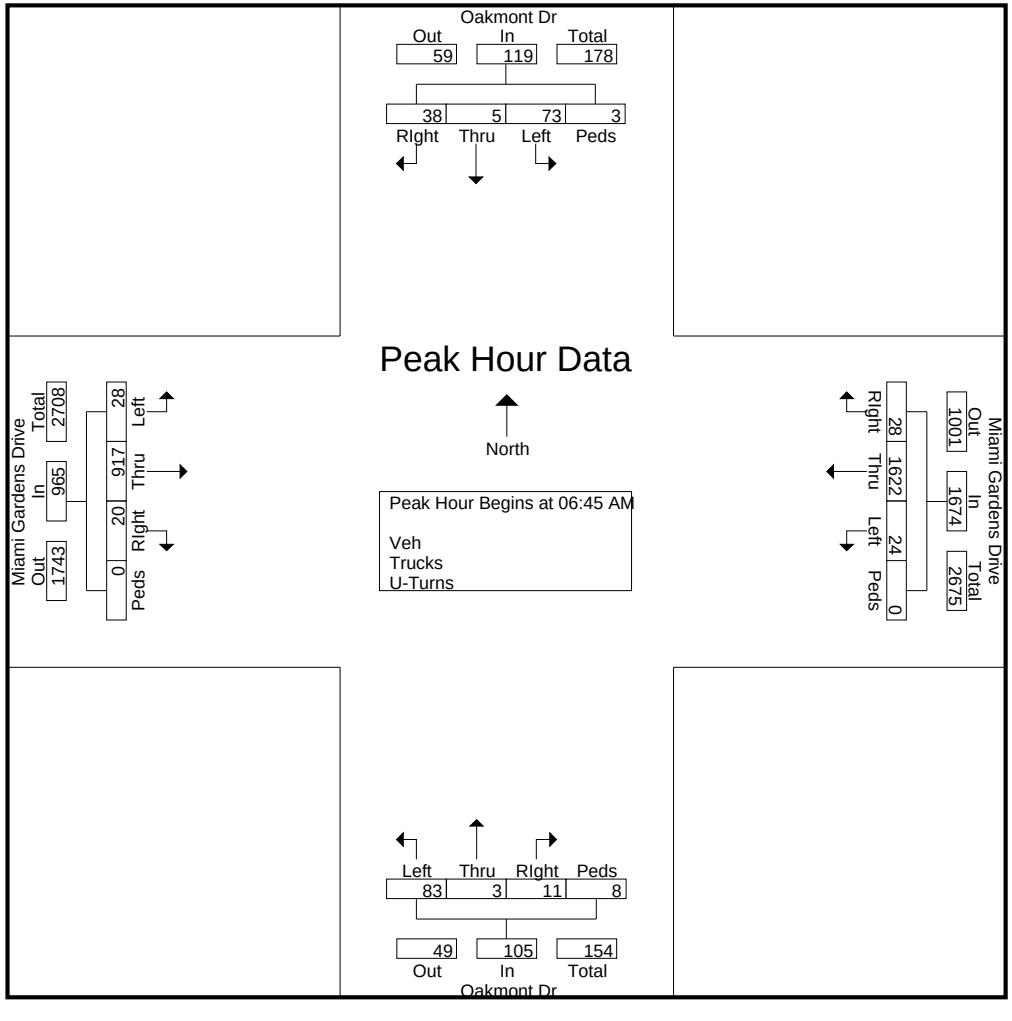

Miami Gardens Drive & Oakmont Drive

File Name : Miami Gardens Drive & Oakmont Drive
Site Code : 00000000
Start Date : 5/4/2016
Page No : 5

	Oakmont Dr Southbound					Oakmont Dr Northbound					Miami Gardens Drive Westbound					Miami Gardens Drive Eastbound					
Start Time	Left	Thru	RIght	Peds/Bike	App. Total	Left	Thru	RIght	Peds/Bike	App. Total	Left	Thru	RIght	Peds/Bike	App. Total	Left	Thru	RIght	Peds/Bike	App. Total	Int. Total
Peak Hour Analysis From 03:00 PM to 06:45 PM - Peak 1 of 1																					
Peak Hour for Entire Intersection Begins at 05:45 PM																					
05:45 PM	11	1	8	0	20	17	4	18	0	39	**24**	292	32	0	348	14	329	12	0	355	762
06:00 PM	12	**2**	**11**	0	25	18	**11**	**22**	0	**51**	24	266	23	0	313	8	363	16	0	387	776
06:15 PM	14	1	10	**1**	**26**	18	2	17	2	39	12	**306**	**34**	0	**352**	**21**	**373**	9	0	**403**	**820**
06:30 PM	**19**	2	3	0	24	**19**	2	16	**4**	41	19	281	32	0	332	12	363	**18**	0	393	790
Total Volume	56	6	32	1	95	72	19	73	6	170	79	1145	121	0	1345	55	1428	55	0	1538	3148
% App. Total	58.9	6.3	33.7	1.1		42.4	11.2	42.9	3.5		5.9	85.1	9	0		3.6	92.8	3.6	0		
PHF	.737	.750	.727	.250	.913	.947	.432	.830	.375	.833	.823	.935	.890	.000	.955	.655	.957	.764	.000	.954	.960

Miami Gardens Drive & Oakmont Drive

File Name : Miami Gardens Drive & Oakmont Drive
Site Code : 00000000
Start Date : 5/4/2016
Page No : 6

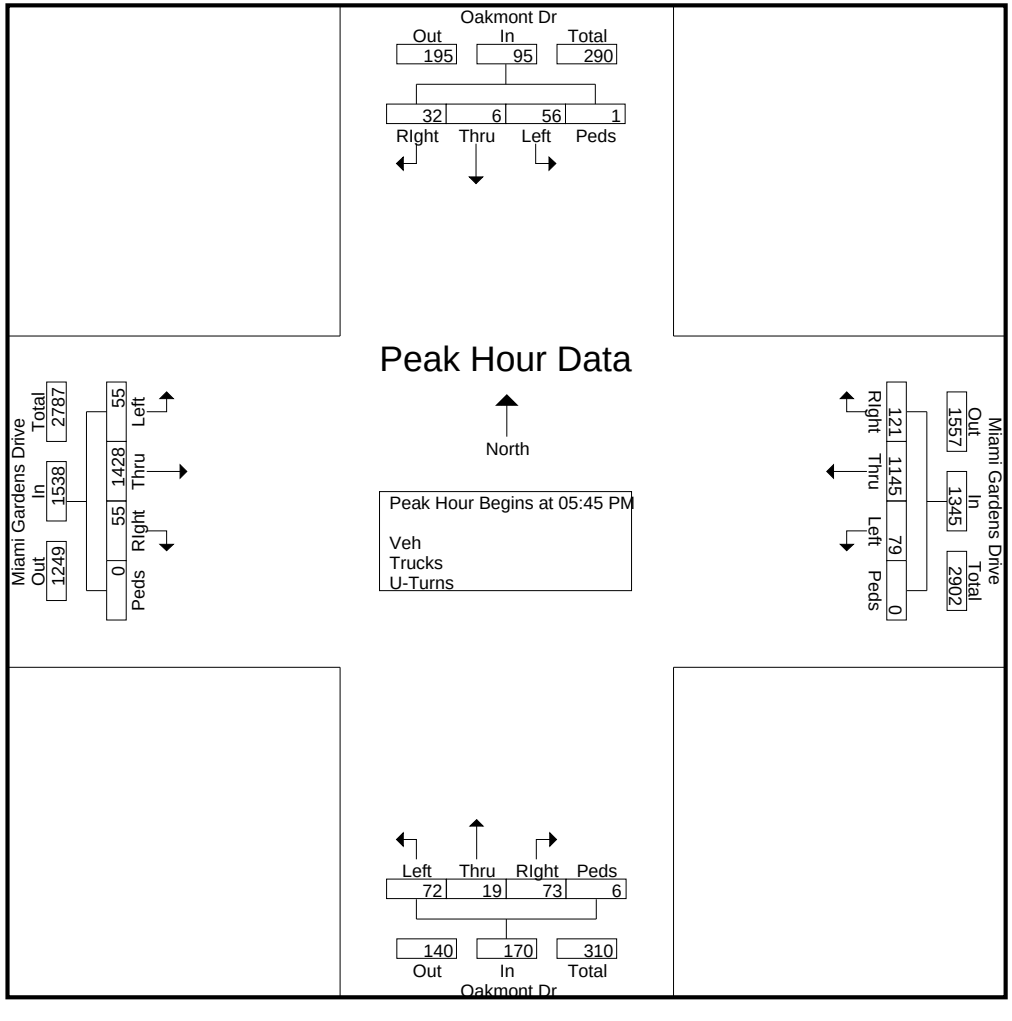

Miami Gardens Drive & NW 75th Place

File Name : Miami Gardens Drive & NW 75th Place
Site Code : 00000000
Start Date : 5/4/2016
Page No : 1

Groups Printed- Trucks

	NW 75th Place Southbound					NW 75th Place Northbound					Miami Gardens Drive Westbound					Miami Gardens Drive Eastbound					
Start Time	Left	Thru	RIght	Bikes	App. Total	Left	Thru	RIght	Bikes	App. Total	Left	Thru	RIght	Bikes	App. Total	Left	Thru	RIght	Bikes	App. Total	Int. Total
06:00 AM	0	0	0	0	0	2	0	0	0	2	1	5	0	0	6	0	5	0	0	5	13
06:15 AM	0	0	0	0	0	2	0	2	0	4	4	11	0	0	15	0	6	2	0	8	27
06:30 AM	0	0	0	1	1	1	0	2	0	3	3	9	0	0	12	0	7	2	0	9	25
06:45 AM	0	0	0	0	0	0	0	1	0	1	2	2	0	0	4	0	14	0	0	14	19
Total	0	0	0	1	1	5	0	5	0	10	10	27	0	0	37	0	32	4	0	36	84
07:00 AM	0	0	0	1	1	2	0	2	0	4	0	3	0	0	3	0	2	1	0	3	11
07:15 AM	0	0	0	0	0	2	0	0	0	2	0	7	0	0	7	0	4	0	0	4	13
07:30 AM	0	0	0	2	2	0	0	3	0	3	0	5	0	0	5	0	0	1	0	1	11
07:45 AM	0	0	0	1	1	0	0	2	0	2	1	2	0	0	3	0	6	1	0	7	13
Total	0	0	0	4	4	4	0	7	0	11	1	17	0	0	18	0	12	3	0	15	48
08:00 AM	0	0	0	0	0	0	0	0	1	1	0	5	0	0	5	0	12	1	0	13	19
08:15 AM	0	0	0	0	0	2	0	2	0	4	2	4	0	0	6	0	3	1	0	4	14
08:30 AM	0	0	0	0	0	0	0	1	0	1	1	7	0	0	8	0	5	0	0	5	14
08:45 AM	0	0	0	0	0	0	0	0	0	0	2	4	0	0	6	0	0	0	0	0	6
Total	0	0	0	0	0	2	0	3	1	6	5	20	0	0	25	0	20	2	0	22	53
*** BREAK ***																					
03:00 PM	0	0	0	0	0	3	0	1	1	5	0	9	0	0	9	0	5	0	0	5	19
03:15 PM	0	0	0	0	0	2	0	4	0	6	2	8	0	0	10	0	5	1	0	6	22
03:30 PM	0	0	0	0	0	0	0	0	0	0	2	9	0	0	11	0	4	1	0	5	16
03:45 PM	0	0	0	0	0	0	0	4	3	7	4	4	0	0	8	0	3	0	0	3	18
Total	0	0	0	0	0	5	0	9	4	18	8	30	0	0	38	0	17	2	0	19	75
04:00 PM	0	0	0	0	0	0	0	3	0	3	1	8	0	0	9	0	13	1	0	14	26
04:15 PM	0	0	0	0	0	0	0	3	0	3	4	4	0	0	8	0	4	3	0	7	18
04:30 PM	0	0	0	0	0	2	0	1	2	5	1	4	0	1	6	0	4	1	0	5	16
04:45 PM	0	0	0	0	0	1	0	2	2	5	0	5	0	1	6	0	4	3	0	7	18
Total	0	0	0	0	0	3	0	9	4	16	6	21	0	2	29	0	25	8	0	33	78
05:00 PM	0	0	0	0	0	1	0	2	1	4	1	3	0	0	4	0	2	1	0	3	11
05:15 PM	0	0	0	2	2	0	0	0	0	0	0	3	0	0	3	0	1	1	0	2	7
05:30 PM	0	0	0	0	0	0	0	1	0	1	0	4	0	0	4	0	2	0	0	2	7
05:45 PM	0	0	0	0	0	1	0	0	0	1	2	2	0	0	4	0	4	0	0	4	9
Total	0	0	0	2	2	2	0	3	1	6	3	12	0	0	15	0	9	2	0	11	34
06:00 PM	0	0	0	0	0	0	0	1	0	1	0	1	0	0	1	0	1	0	0	1	3
06:15 PM	0	0	0	0	0	0	0	0	1	1	0	0	0	0	0	0	3	0	0	3	4
06:30 PM	0	0	0	0	0	0	0	1	2	3	0	2	0	0	2	0	3	0	0	3	8
06:45 PM	0	0	0	1	1	1	0	0	0	1	0	3	0	0	3	0	0	0	0	0	5
Total	0	0	0	1	1	1	0	2	3	6	0	6	0	0	6	0	7	0	0	7	20
Grand Total	0	0	0	8	8	22	0	38	13	73	33	133	0	2	168	0	122	21	0	143	392
Apprch %	0	0	0	100		30.1	0	52.1	17.8		19.6	79.2	0	1.2		0	85.3	14.7	0		
Total %	0	0	0	2	2	5.6	0	9.7	3.3	18.6	8.4	33.9	0	0.5	42.9	0	31.1	5.4	0	36.5	

Miami Gardens Drive & NW 75th Place

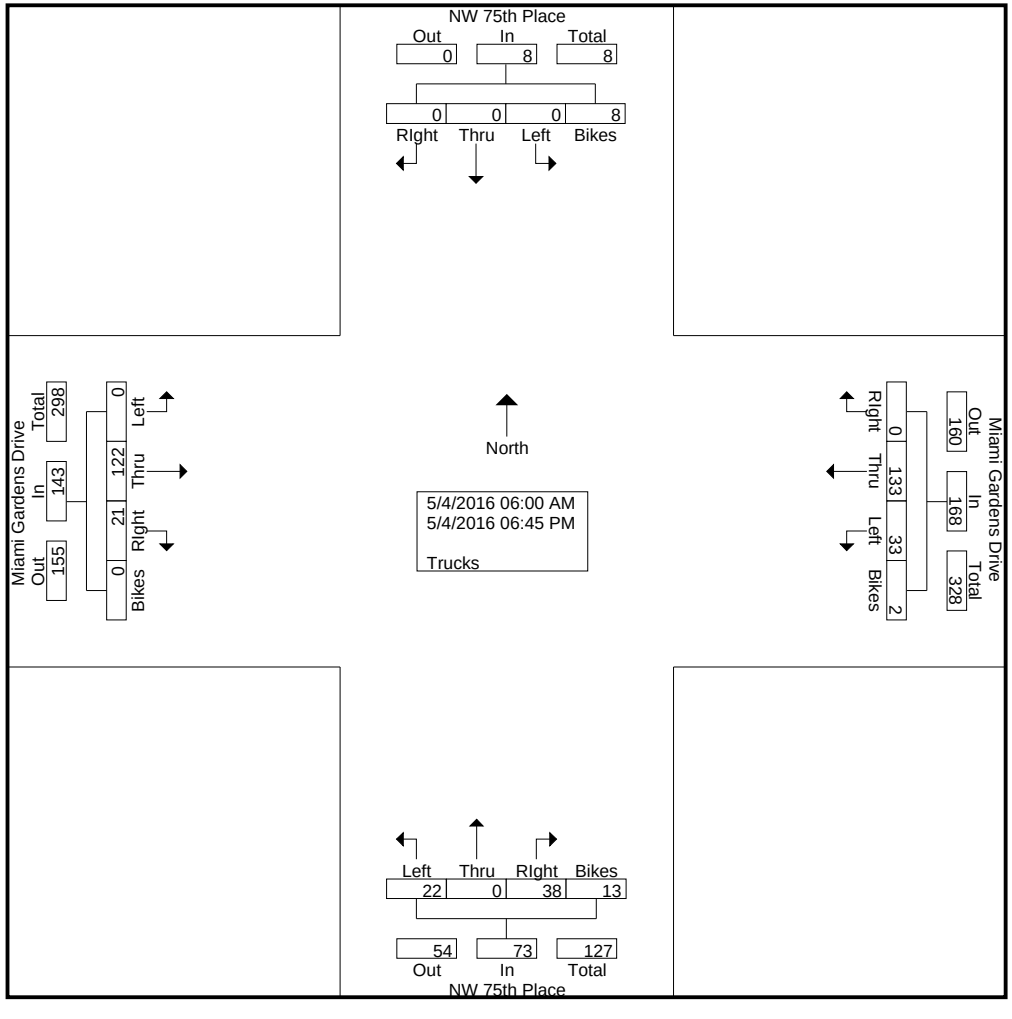

Miami Gardens Drive & NW 75th Place

File Name : Miami Gardens Drive & NW 75th Place
Site Code : 00000000
Start Date : 5/4/2016
Page No : 3

	NW 75th Place Southbound					NW 75th Place Northbound					Miami Gardens Drive Westbound					Miami Gardens Drive Eastbound					
Start Time	Left	Thru	RIght	Bikes	App. Total	Left	Thru	RIght	Bikes	App. Total	Left	Thru	RIght	Bikes	App. Total	Left	Thru	RIght	Bikes	App. Total	Int. Total
Peak Hour Analysis From 06:00 AM to 08:45 AM - Peak 1 of 1																					
Peak Hour for Entire Intersection Begins at 06:00 AM																					
06:00 AM	0	0	0	0	0	**2**	0	0	0	2	1	5	0	0	6	0	5	0	0	5	13
06:15 AM	0	0	0	0	0	2	0	**2**	0	**4**	**4**	**11**	0	0	**15**	0	6	**2**	0	8	**27**
06:30 AM	0	0	0	**1**	**1**	1	0	2	0	3	3	9	0	0	12	0	7	2	0	9	25
06:45 AM	0	0	0	0	0	0	0	1	0	1	2	2	0	0	4	0	**14**	0	0	**14**	19
Total Volume	0	0	0	1	1	5	0	5	0	10	10	27	0	0	37	0	32	4	0	36	84
% App. Total	0	0	0	100		50	0	50	0		27	73	0	0		0	88.9	11.1	0		
PHF	.000	.000	.000	.250	.250	.625	.000	.625	.000	.625	.625	.614	.000	.000	.617	.000	.571	.500	.000	.643	.778

Miami Gardens Drive & NW 75th Place

File Name : Miami Gardens Drive & NW 75th Place
Site Code : 00000000
Start Date : 5/4/2016
Page No : 4

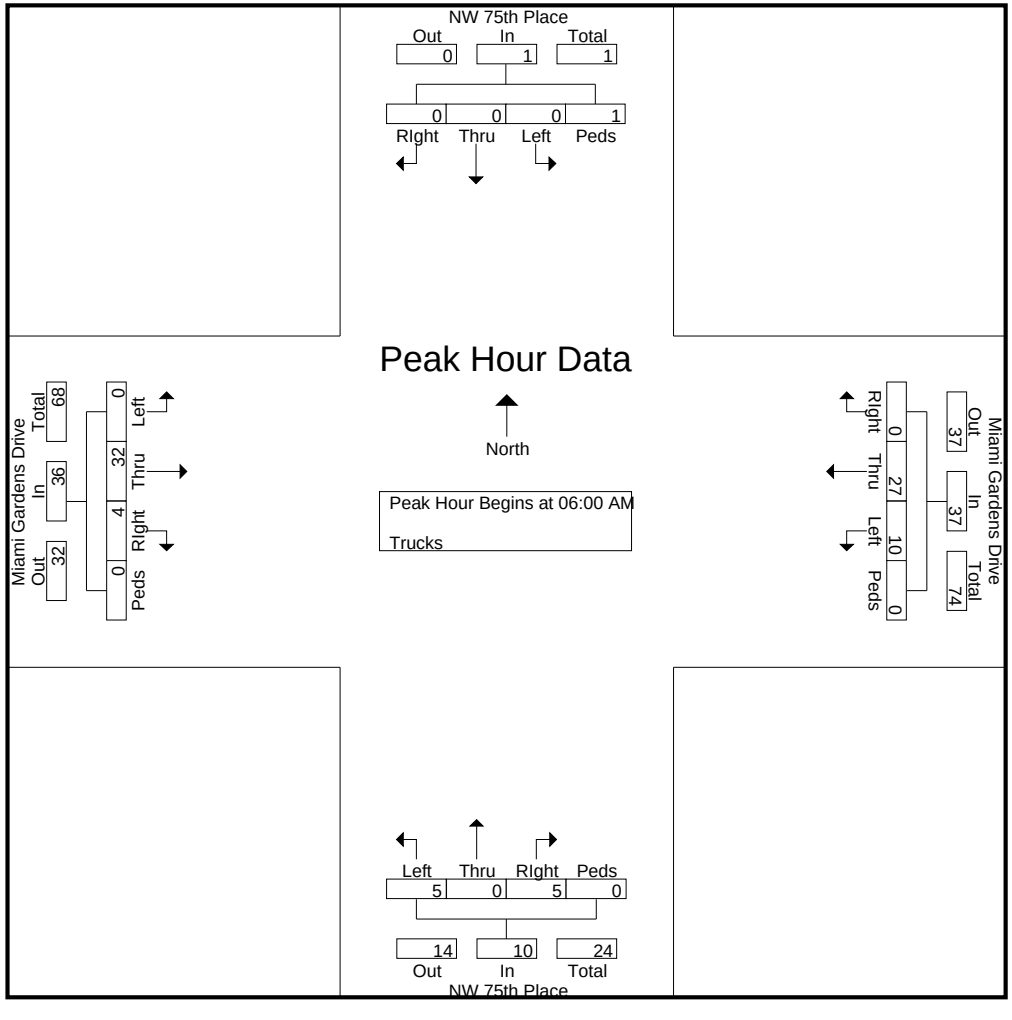

Miami Gardens Drive & NW 75th Place

File Name : Miami Gardens Drive & NW 75th Place
Site Code : 00000000
Start Date : 5/4/2016
Page No : 5

	NW 75th Place Southbound					NW 75th Place Northbound					Miami Gardens Drive Westbound					Miami Gardens Drive Eastbound					
Start Time	Left	Thru	RIght	Bikes	App. Total	Left	Thru	RIght	Bikes	App. Total	Left	Thru	RIght	Bikes	App. Total	Left	Thru	RIght	Bikes	App. Total	Int. Total
Peak Hour Analysis From 03:00 PM to 06:45 PM - Peak 1 of 1																					
Peak Hour for Entire Intersection Begins at 03:15 PM																					
03:15 PM	0	0	0	0	0	**2**	0	**4**	0	6	2	8	0	0	10	0	5	**1**	0	6	22
03:30 PM	0	0	0	0	0	0	0	0	0	0	2	**9**	0	0	**11**	0	4	1	0	5	16
03:45 PM	0	0	0	0	0	0	0	4	**3**	**7**	**4**	4	0	0	8	0	3	0	0	3	18
04:00 PM	0	0	0	0	0	0	0	3	0	3	1	8	0	0	9	0	**13**	1	0	**14**	**26**
Total Volume	0	0	0	0	0	2	0	11	3	16	9	29	0	0	38	0	25	3	0	28	82
% App. Total	0	0	0	0		12.5	0	68.8	18.8		23.7	76.3	0	0		0	89.3	10.7	0		
PHF	.000	.000	.000	.000	.000	.250	.000	.688	.250	.571	.563	.806	.000	.000	.864	.000	.481	.750	.000	.500	.788

Miami Gardens Drive & NW 75th Place

File Name : Miami Gardens Drive & NW 75th Place
Site Code : 00000000
Start Date : 5/4/2016
Page No : 6

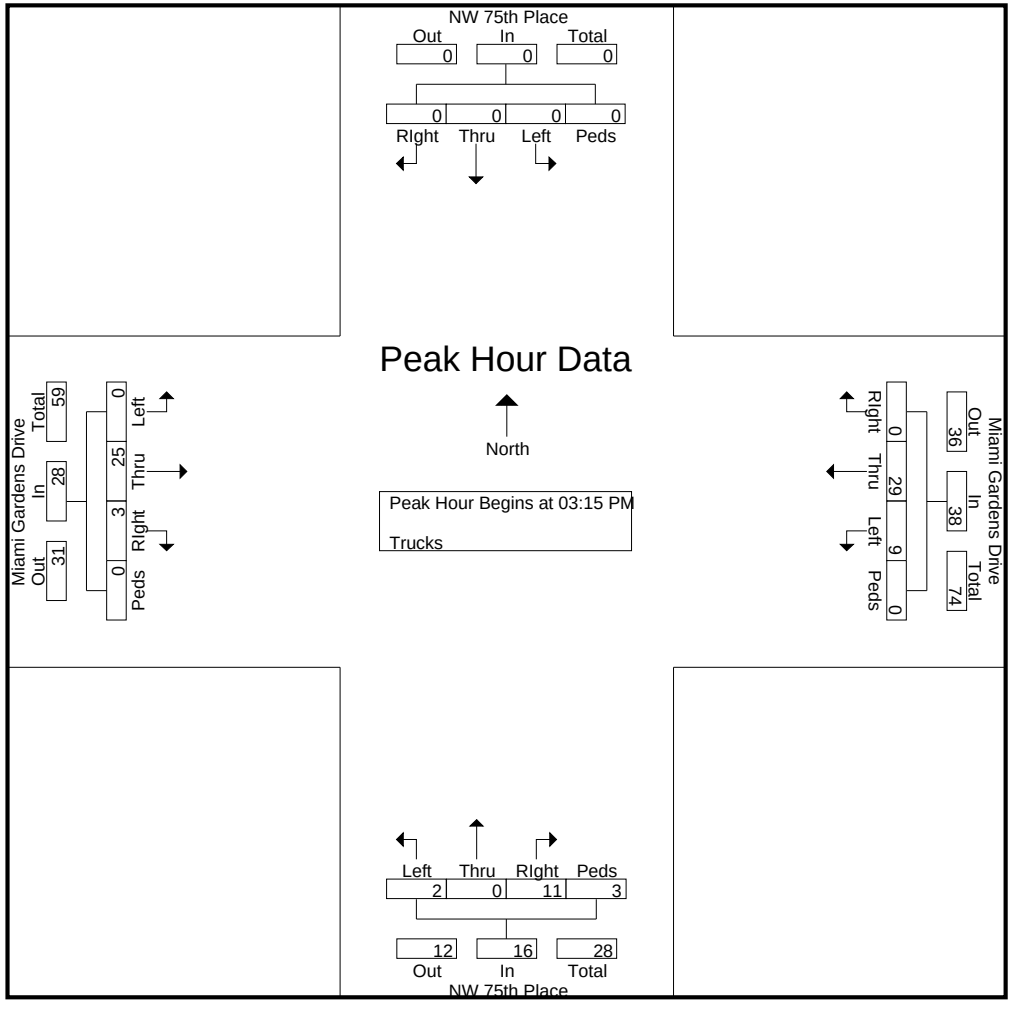

Miami Gardens Drive & NW 75th Place

File Name : Miami Gardens Drive & NW 75th Place
Site Code : 00000000
Start Date : 5/4/2016
Page No : 1

Groups Printed- Turns

	NW 75th Place Southbound					NW 75th Place Northbound					Miami Gardens Drive Westbound					Miami Gardens Drive Eastbound					
Start Time	Left	Thru	RIght	Peds/Bike	App. Total	Left	Thru	RIght	Peds/Bike	App. Total	Left	Thru	RIght	Peds/Bike	App. Total	Left	Thru	RIght	Peds/Bike	App. Total	Int. Total
06:00 AM	0	0	0	0	0	1	0	0	0	1	0	0	0	0	0	0	0	0	0	0	1
06:15 AM	0	0	0	0	0	1	0	0	0	1	0	0	0	0	0	0	0	0	0	0	1
06:30 AM	0	0	0	0	0	2	0	0	0	2	0	0	0	0	0	0	0	0	0	0	2
06:45 AM	0	0	0	0	0	3	0	0	0	3	0	0	0	0	0	0	0	0	0	0	3
Total	0	0	0	0	0	7	0	0	0	7	0	0	0	0	0	0	0	0	0	0	7
07:00 AM	0	0	0	0	0	3	0	0	0	3	0	0	0	0	0	0	0	0	0	0	3
*** BREAK ***																					
07:30 AM	0	0	0	0	0	3	0	0	0	3	1	0	0	0	1	0	0	0	0	0	4
07:45 AM	0	0	0	0	0	4	0	0	0	4	0	0	0	0	0	0	0	0	0	0	4
Total	0	0	0	0	0	10	0	0	0	10	1	0	0	0	1	0	0	0	0	0	11
08:00 AM	0	0	0	0	0	3	0	0	0	3	0	0	0	0	0	0	0	0	0	0	3
08:15 AM	0	0	0	0	0	1	0	0	0	1	0	0	0	0	0	0	0	0	0	0	1
08:30 AM	0	0	0	0	0	3	0	0	0	3	0	0	0	0	0	0	0	0	0	0	3
08:45 AM	0	0	0	0	0	2	0	0	0	2	0	0	0	0	0	0	0	0	0	0	2
Total	0	0	0	0	0	9	0	0	0	9	0	0	0	0	0	0	0	0	0	0	9
*** BREAK ***																					
03:00 PM	0	0	0	0	0	4	0	0	0	4	0	0	0	0	0	0	0	0	0	0	4
03:15 PM	0	0	0	0	0	1	0	0	0	1	0	0	0	0	0	0	0	0	0	0	1
03:30 PM	0	0	0	0	0	1	0	0	0	1	0	0	0	0	0	0	0	0	0	0	1
03:45 PM	0	0	0	0	0	2	0	0	0	2	0	0	0	0	0	0	0	0	0	0	2
Total	0	0	0	0	0	8	0	0	0	8	0	0	0	0	0	0	0	0	0	0	8
04:00 PM	0	0	0	0	0	0	0	0	0	0	1	0	0	0	1	0	0	0	0	0	1
04:15 PM	0	0	0	0	0	3	0	0	0	3	0	0	0	0	0	0	0	0	0	0	3
04:30 PM	0	0	0	0	0	1	0	0	0	1	1	0	0	0	1	0	0	0	0	0	2
04:45 PM	0	0	0	0	0	3	0	0	0	3	0	0	0	0	0	0	0	0	0	0	3
Total	0	0	0	0	0	7	0	0	0	7	2	0	0	0	2	0	0	0	0	0	9
05:00 PM	0	0	0	0	0	1	0	0	0	1	0	0	0	0	0	0	0	0	0	0	1
05:15 PM	0	0	0	0	0	1	0	0	0	1	0	0	0	0	0	0	0	0	0	0	1
05:30 PM	0	0	0	0	0	2	0	0	0	2	0	0	0	0	0	0	0	0	0	0	2
*** BREAK ***																					
Total	0	0	0	0	0	4	0	0	0	4	0	0	0	0	0	0	0	0	0	0	4
06:00 PM	0	0	0	0	0	2	0	0	0	2	0	0	0	0	0	0	0	0	0	0	2
06:15 PM	0	0	0	0	0	1	0	0	0	1	1	0	0	0	1	0	0	0	0	0	2
06:30 PM	0	0	0	0	0	1	0	0	0	1	1	0	0	0	1	0	0	0	0	0	2
06:45 PM	0	0	0	0	0	3	0	0	0	3	1	0	0	0	1	0	0	0	0	0	4
Total	0	0	0	0	0	7	0	0	0	7	3	0	0	0	3	0	0	0	0	0	10
Grand Total	0	0	0	0	0	52	0	0	0	52	6	0	0	0	6	0	0	0	0	0	58
Apprch %	0	0	0	0		100	0	0	0		100	0	0	0		0	0	0	0		
Total %	0	0	0	0	0	89.7	0	0	0	89.7	10.3	0	0	0	10.3	0	0	0	0	0	

Miami Gardens Drive & NW 75th Place

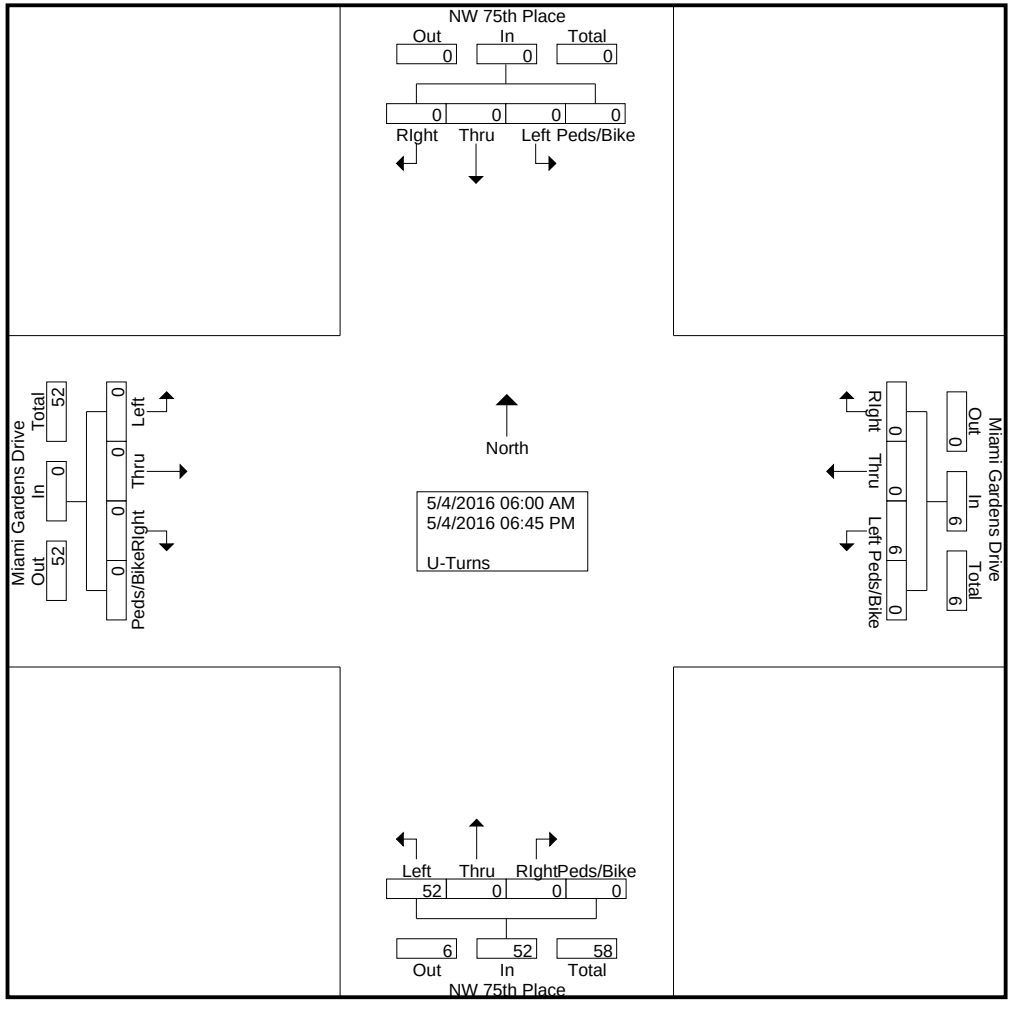

Miami Gardens Drive & NW 75th Place

File Name : Miami Gardens Drive & NW 75th Place
Site Code : 00000000
Start Date : 5/4/2016
Page No : 3

	NW 75th Place Southbound					NW 75th Place Northbound					Miami Gardens Drive Westbound					Miami Gardens Drive Eastbound					
Start Time	Left	Thru	RIght	Peds/Bike	App. Total	Left	Thru	RIght	Peds/Bike	App. Total	Left	Thru	RIght	Peds/Bike	App. Total	Left	Thru	RIght	Peds/Bike	App. Total	Int. Total
Peak Hour Analysis From 06:00 AM to 08:45 AM - Peak 1 of 1																					
Peak Hour for Entire Intersection Begins at 07:30 AM																					
07:30 AM	0	0	0	0	0	3	0	0	0	3	**1**	0	0	0	**1**	0	0	0	0	0	**4**
07:45 AM	0	0	0	0	0	**4**	0	0	0	**4**	0	0	0	0	0	0	0	0	0	0	4
08:00 AM	0	0	0	0	0	3	0	0	0	3	0	0	0	0	0	0	0	0	0	0	3
08:15 AM	0	0	0	0	0	1	0	0	0	1	0	0	0	0	0	0	0	0	0	0	1
Total Volume	0	0	0	0	0	11	0	0	0	11	1	0	0	0	1	0	0	0	0	0	12
% App. Total	0	0	0	0		100	0	0	0		100	0	0	0		0	0	0	0		
PHF	.000	.000	.000	.000	.000	.688	.000	.000	.000	.688	.250	.000	.000	.000	.250	.000	.000	.000	.000	.000	.750

Miami Gardens Drive & NW 75th Place

File Name : Miami Gardens Drive & NW 75th Place
Site Code : 00000000
Start Date : 5/4/2016
Page No : 4

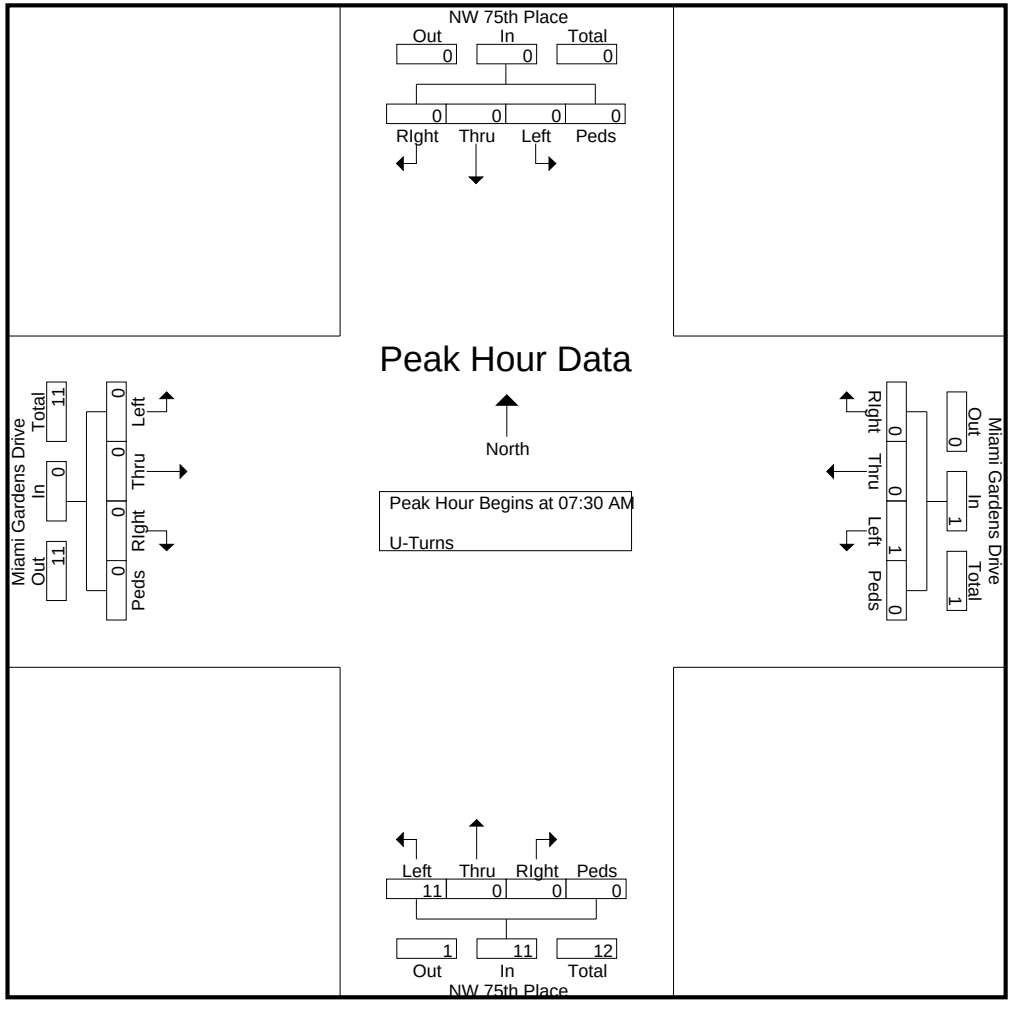

Miami Gardens Drive & NW 75th Place

File Name : Miami Gardens Drive & NW 75th Place
Site Code : 00000000
Start Date : 5/4/2016
Page No : 5

	NW 75th Place Southbound					NW 75th Place Northbound					Miami Gardens Drive Westbound					Miami Gardens Drive Eastbound					
Start Time	Left	Thru	RIght	Peds/Bike	App. Total	Left	Thru	RIght	Peds/Bike	App. Total	Left	Thru	RIght	Peds/Bike	App. Total	Left	Thru	RIght	Peds/Bike	App. Total	Int. Total
Peak Hour Analysis From 03:00 PM to 06:45 PM - Peak 1 of 1																					
Peak Hour for Entire Intersection Begins at 06:00 PM																					
06:00 PM	0	0	0	0	0	2	0	0	0	2	0	0	0	0	0	0	0	0	0	0	2
06:15 PM	0	0	0	0	0	1	0	0	0	1	**1**	0	0	0	**1**	0	0	0	0	0	2
06:30 PM	0	0	0	0	0	1	0	0	0	1	1	0	0	0	1	0	0	0	0	0	2
06:45 PM	0	0	0	0	0	**3**	0	0	0	**3**	1	0	0	0	1	0	0	0	0	0	**4**
Total Volume	0	0	0	0	0	7	0	0	0	7	3	0	0	0	3	0	0	0	0	0	10
% App. Total	0	0	0	0		100	0	0	0		100	0	0	0		0	0	0	0		
PHF	.000	.000	.000	.000	.000	.583	.000	.000	.000	.583	.750	.000	.000	.000	.750	.000	.000	.000	.000	.000	.625

Miami Gardens Drive & NW 75th Place

File Name : Miami Gardens Drive & NW 75th Place
Site Code : 00000000
Start Date : 5/4/2016
Page No : 6

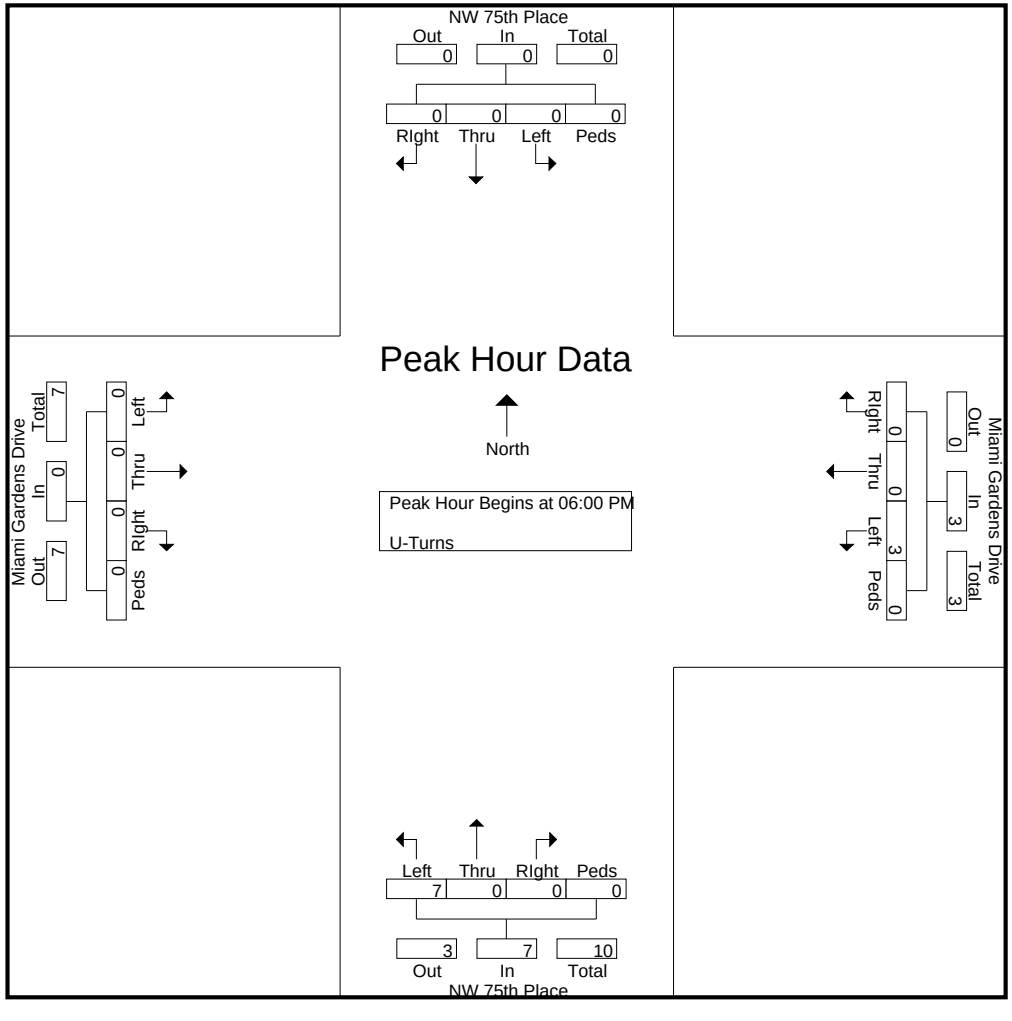

Miami Gardens Drive & NW 75th Place

File Name : Miami Gardens Drive & NW 75th Place
Site Code : 00000000
Start Date : 5/4/2016
Page No : 1

Groups Printed- Veh - Trucks - Turns

	NW 75th Place Southbound					NW 75th Place Northbound					Miami Gardens Drive Westbound					Miami Gardens Drive Eastbound					
Start Time	Left	Thru	RIght	Peds/Bike	App. Total	Left	Thru	RIght	Peds/Bike	App. Total	Left	Thru	RIght	Peds/Bike	App. Total	Left	Thru	RIght	Peds/Bike	App. Total	Int. Total
06:00 AM	0	0	0	0	0	12	0	21	0	33	23	84	0	0	107	0	100	18	0	118	258
06:15 AM	0	0	1	1	2	24	1	29	1	55	28	169	0	0	197	0	85	42	4	131	385
06:30 AM	0	0	0	1	1	31	0	27	2	60	53	336	0	2	391	0	149	42	0	191	643
06:45 AM	0	0	0	0	0	48	0	32	0	80	68	389	0	0	457	0	192	57	0	249	786
Total	0	0	1	2	3	115	1	109	3	228	172	978	0	2	1152	0	526	159	4	689	2072
07:00 AM	0	0	0	2	2	47	0	48	1	96	95	388	0	0	483	0	186	61	1	248	829
07:15 AM	0	0	0	0	0	32	0	56	1	89	81	393	0	0	474	0	232	59	0	291	854
07:30 AM	0	0	0	2	2	43	0	28	2	73	101	349	0	3	453	0	163	36	0	199	727
07:45 AM	0	0	0	1	1	43	0	48	1	92	95	323	0	1	419	0	170	21	0	191	703
Total	0	0	0	5	5	165	0	180	5	350	372	1453	0	4	1829	0	751	177	1	929	3113
08:00 AM	0	0	0	0	0	60	0	44	2	106	86	327	0	0	413	0	193	49	0	242	761
08:15 AM	0	0	0	0	0	53	0	65	1	119	114	352	0	8	474	0	210	51	0	261	854
08:30 AM	0	0	0	0	0	43	0	71	1	115	82	299	0	0	381	0	205	61	0	266	762
08:45 AM	0	0	0	0	0	40	0	61	0	101	99	265	0	0	364	0	191	42	0	233	698
Total	0	0	0	0	0	196	0	241	4	441	381	1243	0	8	1632	0	799	203	0	1002	3075
*** BREAK ***																					
03:00 PM	0	0	0	0	0	38	0	45	3	86	36	226	0	0	262	0	227	39	0	266	614
03:15 PM	0	0	0	0	0	31	0	45	0	76	56	217	0	0	273	0	197	33	0	230	579
03:30 PM	0	0	0	1	1	48	0	50	0	98	62	260	0	0	322	0	184	34	0	218	639
03:45 PM	0	0	0	3	3	35	0	76	7	118	65	257	0	0	322	0	278	36	0	314	757
Total	0	0	0	4	4	152	0	216	10	378	219	960	0	0	1179	0	886	142	0	1028	2589
04:00 PM	0	0	0	2	2	38	0	81	1	120	53	198	0	4	255	0	292	49	0	341	718
04:15 PM	0	0	0	3	3	52	0	60	0	112	50	210	0	0	260	0	284	45	0	329	704
04:30 PM	0	0	0	0	0	43	0	47	2	92	56	195	0	1	252	0	248	46	0	294	638
04:45 PM	0	0	0	2	2	48	0	63	6	117	45	223	1	3	272	0	293	45	0	338	729
Total	0	0	0	7	7	181	0	251	9	441	204	826	1	8	1039	0	1117	185	0	1302	2789
05:00 PM	0	0	0	0	0	47	0	65	2	114	73	260	0	0	333	0	327	52	0	379	826
05:15 PM	0	0	0	2	2	40	0	85	1	126	45	274	0	0	319	1	334	47	0	382	829
05:30 PM	0	0	0	1	1	45	0	70	0	115	56	267	0	0	323	0	331	54	0	385	824
05:45 PM	0	0	0	1	1	66	0	73	0	139	54	278	1	1	334	0	311	66	0	377	851
Total	0	0	0	4	4	198	0	293	3	494	228	1079	1	1	1309	1	1303	219	0	1523	3330
06:00 PM	0	0	0	3	3	63	0	100	0	163	65	235	0	0	300	0	338	62	0	400	866
06:15 PM	0	0	0	2	2	57	0	79	3	139	62	290	1	0	353	0	311	74	0	385	879
06:30 PM	0	0	0	2	2	66	0	81	2	149	50	249	0	0	299	0	324	66	0	390	840
06:45 PM	0	0	1	1	2	54	0	56	1	111	64	222	1	0	287	0	264	62	0	326	726
Total	0	0	1	8	9	240	0	316	6	562	241	996	2	0	1239	0	1237	264	0	1501	3311
Grand Total	0	0	2	30	32	1247	1	1606	40	2894	1817	7535	4	23	9379	1	6619	1349	5	7974	20279
Apprch %	0	0	6.2	93.8		43.1	0	55.5	1.4		19.4	80.3	0	0.2		0	83	16.9	0.1		
Total %	0	0	0	0.1	0.2	6.1	0	7.9	0.2	14.3	9	37.2	0	0.1	46.2	0	32.6	6.7	0	39.3	

Miami Gardens Drive & NW 75th Place

File Name : Miami Gardens Drive & NW 75th Place
Site Code : 00000000
Start Date : 5/4/2016
Page No : 2

Groups Printed- Veh - Trucks - Turns

	NW 75th Place Southbound					NW 75th Place Northbound					Miami Gardens Drive Westbound					Miami Gardens Drive Eastbound					
	Left	Thru	RIght	Peds/Bike	App. Total	Left	Thru	RIght	Peds/Bike	App. Total	Left	Thru	RIght	Peds/Bike	App. Total	Left	Thru	RIght	Peds/Bike	App. Total	Int. Total
Veh	0	0	2	22	24	1173	1	1568	27	2769	1778	7402	4	21	9205	1	6497	1328	5	7831	19829
% Veh	0	0	100	73.3	75	94.1	100	97.6	67.5	95.7	97.9	98.2	100	91.3	98.1	100	98.2	98.4	100	98.2	97.8
Trucks	0	0	0	8	8	22	0	38	13	73	33	133	0	2	168	0	122	21	0	143	392
% Trucks	0	0	0	26.7	25	1.8	0	2.4	32.5	2.5	1.8	1.8	0	8.7	1.8	0	1.8	1.6	0	1.8	1.9
U-Turns	0	0	0	0	0	52	0	0	0	52	6	0	0	0	6	0	0	0	0	0	58
% U-Turns	0	0	0	0	0	4.2	0	0	0	1.8	0.3	0	0	0	0.1	0	0	0	0	0	0.3

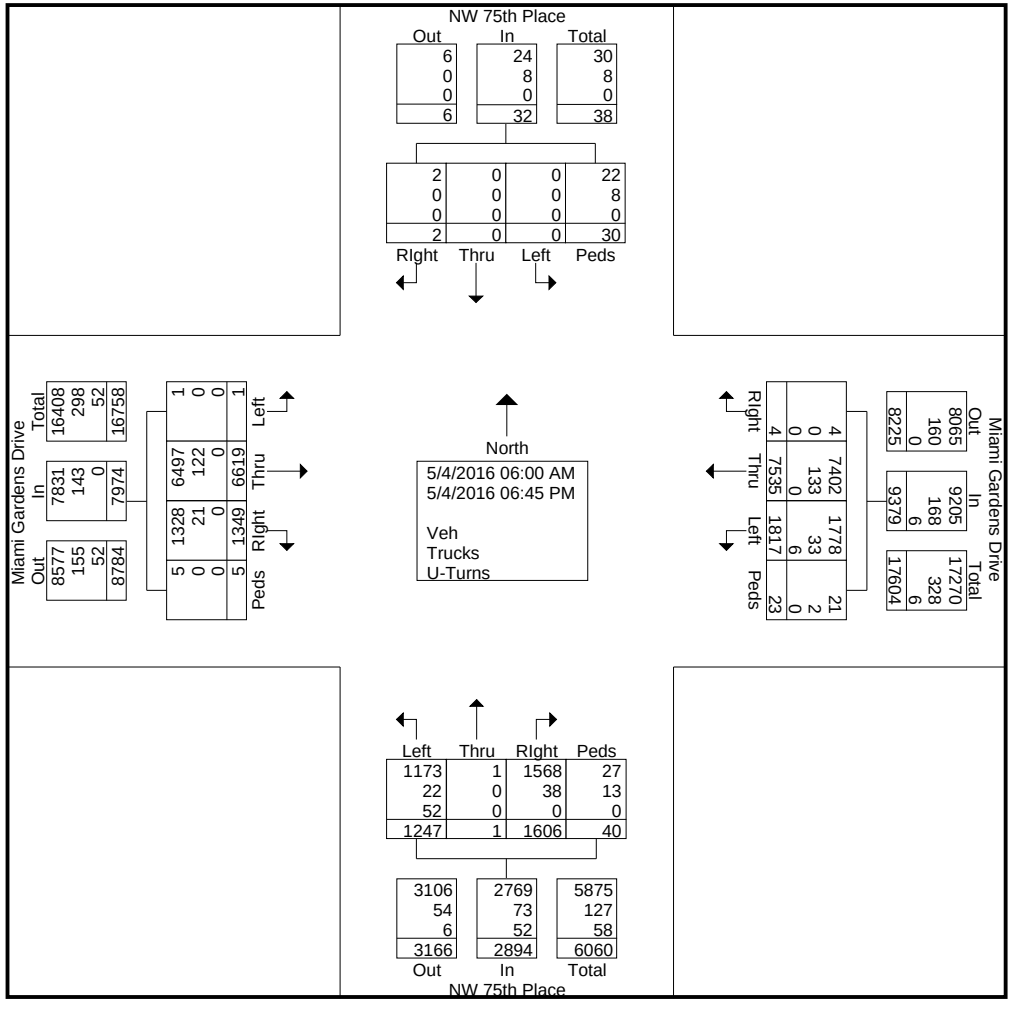

Miami Gardens Drive & NW 75th Place

File Name : Miami Gardens Drive & NW 75th Place
Site Code : 00000000
Start Date : 5/4/2016
Page No : 3

	NW 75th Place Southbound					NW 75th Place Northbound					Miami Gardens Drive Westbound					Miami Gardens Drive Eastbound					
Start Time	Left	Thru	RIght	Peds/Bike	App. Total	Left	Thru	RIght	Peds/Bike	App. Total	Left	Thru	RIght	Peds/Bike	App. Total	Left	Thru	RIght	Peds/Bike	App. Total	Int. Total
Peak Hour Analysis From 06:00 AM to 08:45 AM - Peak 1 of 1																					
Peak Hour for Entire Intersection Begins at 06:45 AM																					
06:45 AM	0	0	0	0	0	**48**	0	32	0	80	68	389	0	0	457	0	192	57	0	249	786
07:00 AM	0	0	0	**2**	**2**	47	0	48	1	**96**	95	388	0	0	**483**	0	186	**61**	**1**	248	829
07:15 AM	0	0	0	0	0	32	0	**56**	1	89	81	**393**	0	0	474	0	**232**	59	0	**291**	**854**
07:30 AM	0	0	0	2	2	43	0	28	**2**	73	**101**	349	0	**3**	453	0	163	36	0	199	727
Total Volume	0	0	0	4	4	170	0	164	4	338	345	1519	0	3	1867	0	773	213	1	987	3196
% App. Total	0	0	0	100		50.3	0	48.5	1.2		18.5	81.4	0	0.2		0	78.3	21.6	0.1		
PHF	.000	.000	.000	.500	.500	.885	.000	.732	.500	.880	.854	.966	.000	.250	.966	.000	.833	.873	.250	.848	.936

Miami Gardens Drive & NW 75th Place

File Name : Miami Gardens Drive & NW 75th Place
Site Code : 00000000
Start Date : 5/4/2016
Page No : 4

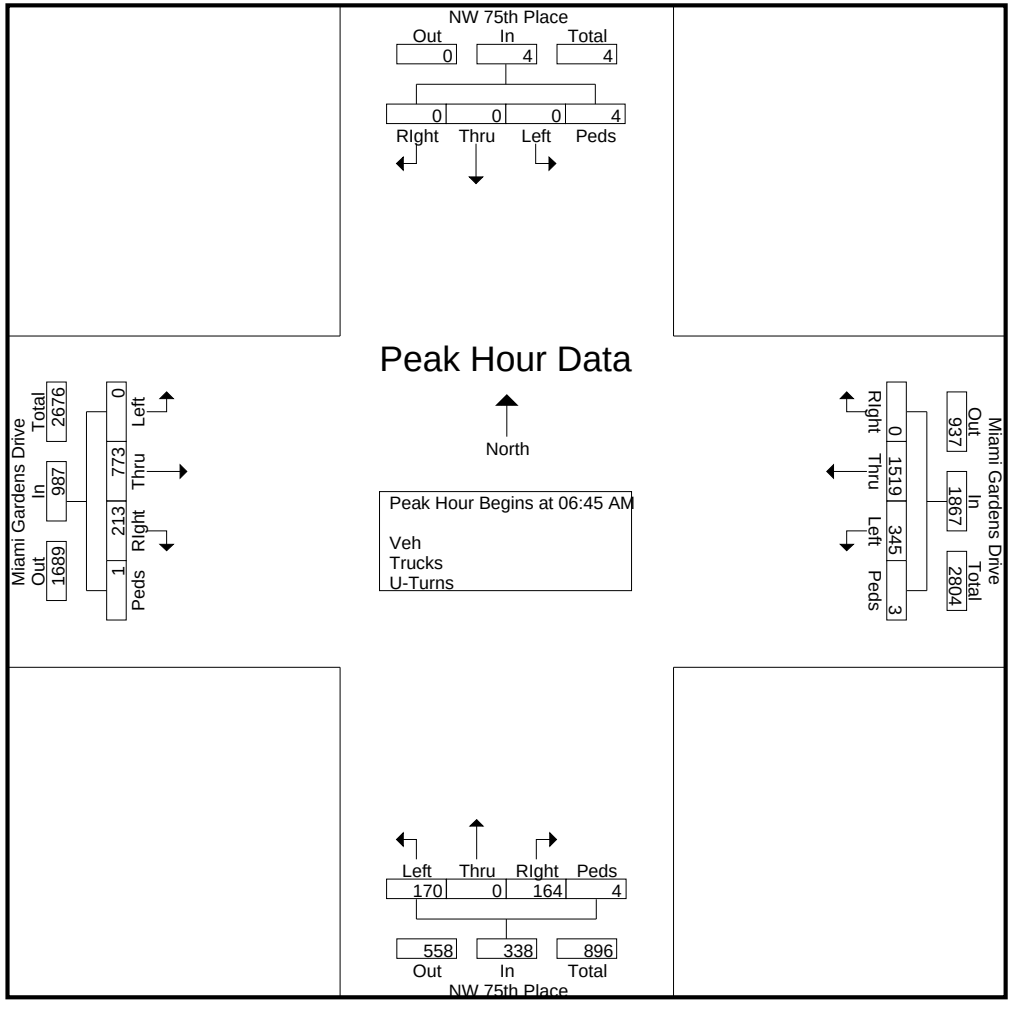

Miami Gardens Drive & NW 75th Place

File Name : Miami Gardens Drive & NW 75th Place
Site Code : 00000000
Start Date : 5/4/2016
Page No : 5

	NW 75th Place Southbound					NW 75th Place Northbound					Miami Gardens Drive Westbound					Miami Gardens Drive Eastbound					
Start Time	Left	Thru	RIght	Peds/Bike	App. Total	Left	Thru	RIght	Peds/Bike	App. Total	Left	Thru	RIght	Peds/Bike	App. Total	Left	Thru	RIght	Peds/Bike	App. Total	Int. Total
Peak Hour Analysis From 03:00 PM to 06:45 PM - Peak 1 of 1																					
Peak Hour for Entire Intersection Begins at 05:45 PM																					
05:45 PM	0	0	0	1	1	**66**	0	73	0	139	54	278	**1**	**1**	334	0	311	66	0	377	851
06:00 PM	0	0	0	**3**	**3**	63	0	**100**	0	**163**	**65**	235	0	0	300	0	**338**	62	0	**400**	866
06:15 PM	0	0	0	2	2	57	0	79	**3**	139	62	**290**	1	0	**353**	0	311	**74**	0	385	**879**
06:30 PM	0	0	0	2	2	66	0	81	2	149	50	249	0	0	299	0	324	66	0	390	840
Total Volume	0	0	0	8	8	252	0	333	5	590	231	1052	2	1	1286	0	1284	268	0	1552	3436
% App. Total	0	0	0	100		42.7	0	56.4	0.8		18	81.8	0.2	0.1		0	82.7	17.3	0		
PHF	.000	.000	.000	.667	.667	.955	.000	.833	.417	.905	.888	.907	.500	.250	.911	.000	.950	.905	.000	.970	.977

Miami Gardens Drive & NW 75th Place

File Name : Miami Gardens Drive & NW 75th Place
Site Code : 00000000
Start Date : 5/4/2016
Page No : 6

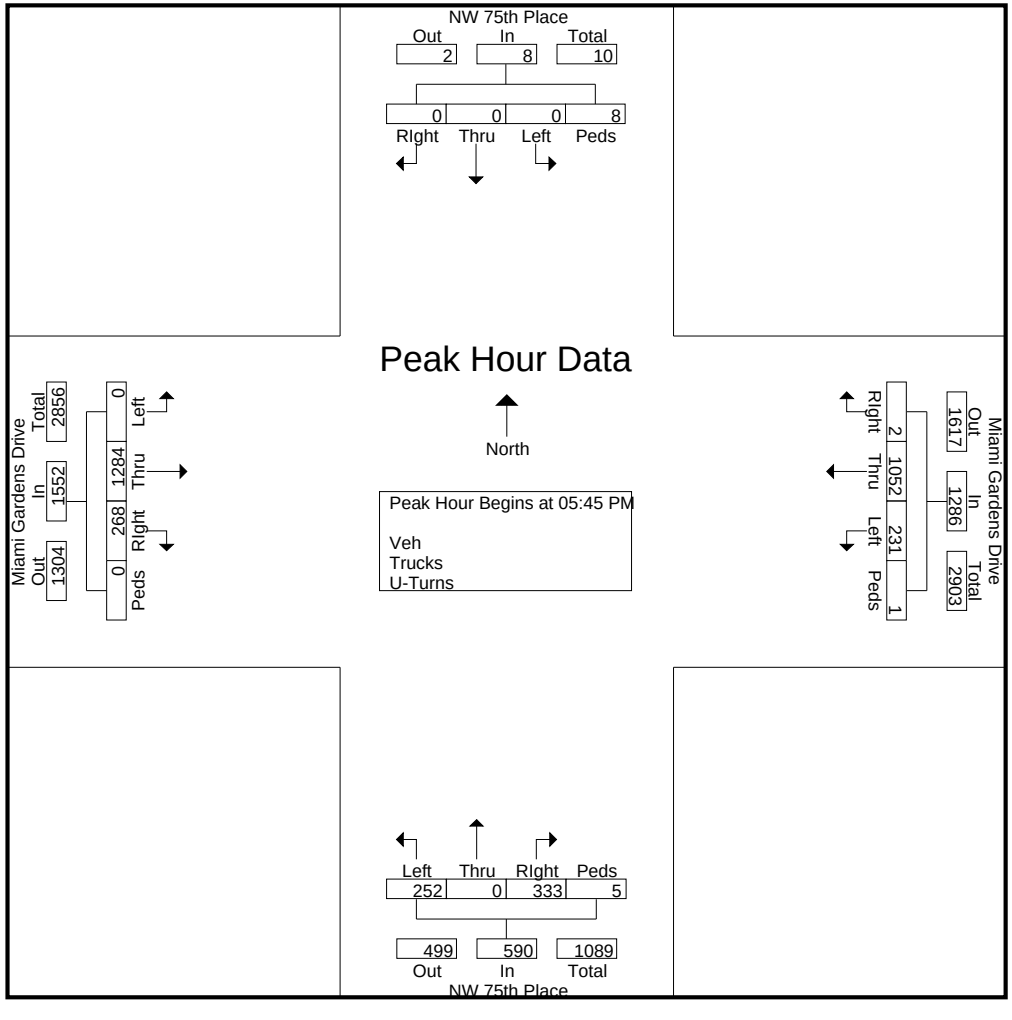

Miami Gardens Drive & NW 73rd Avenue

File Name : Miami Gardens Drive & NW 73rd Avenue
Site Code : 00000000
Start Date : 5/4/2016
Page No : 1

Groups Printed- Trucks

	NW 73rd Avenue Southbound					NW 73rd Avenue Northbound					Miami Gardens Drive Westbound					Miami Gardens Drive Eastbound					
Start Time	Left	Thru	RIght	Bikes	App. Total	Left	Thru	RIght	Bikes	App. Total	Left	Thru	RIght	Bikes	App. Total	Left	Thru	RIght	Bikes	App. Total	Int. Total
06:00 AM	0	0	0	0	0	0	0	2	0	2	1	6	0	0	7	0	6	0	0	6	15
06:15 AM	0	0	0	0	0	0	0	1	0	1	4	11	0	0	15	0	5	1	1	7	23
06:30 AM	0	0	0	0	0	0	0	1	1	2	2	14	0	0	16	0	7	2	0	9	27
06:45 AM	0	0	0	0	0	0	0	0	0	0	1	3	0	0	4	0	13	2	0	15	19
Total	0	0	0	0	0	0	0	4	1	5	8	34	0	0	42	0	31	5	1	37	84
07:00 AM	0	0	0	2	2	0	0	2	0	2	3	3	0	0	6	0	3	4	0	7	17
07:15 AM	0	0	0	0	0	3	1	0	0	4	0	4	0	0	4	0	4	1	0	5	13
07:30 AM	0	0	0	0	0	1	0	1	0	2	1	4	0	0	5	0	5	0	0	5	12
07:45 AM	0	0	1	1	2	0	1	0	1	2	0	2	0	0	2	0	3	2	0	5	11
Total	0	0	1	3	4	4	2	3	1	10	4	13	0	0	17	0	15	7	0	22	53
08:00 AM	0	0	0	0	0	0	0	1	0	1	0	4	0	1	5	1	15	1	1	18	24
08:15 AM	0	0	0	1	1	4	0	2	0	6	3	2	1	0	6	0	1	4	1	6	19
08:30 AM	0	0	1	0	1	2	0	0	0	2	2	5	0	0	7	0	5	1	0	6	16
08:45 AM	0	0	0	0	0	1	0	0	0	1	3	5	0	0	8	0	0	1	0	1	10
Total	0	0	1	1	2	7	0	3	0	10	8	16	1	1	26	1	21	7	2	31	69
*** BREAK ***																					
03:00 PM	1	0	0	0	1	0	0	2	1	3	3	7	0	0	10	1	2	1	0	4	18
03:15 PM	0	0	0	0	0	1	0	3	0	4	1	8	0	0	9	0	5	4	0	9	22
03:30 PM	0	0	0	0	0	1	0	1	0	2	1	11	0	0	12	0	2	3	0	5	19
03:45 PM	0	0	0	0	0	1	0	1	2	4	5	3	0	0	8	0	0	7	0	7	19
Total	1	0	0	0	1	3	0	7	3	13	10	29	0	0	39	1	9	15	0	25	78
04:00 PM	0	1	0	0	1	3	1	10	1	15	0	5	0	0	5	0	7	1	0	8	29
04:15 PM	0	0	0	0	0	2	0	0	0	2	0	6	0	0	6	0	4	3	0	7	15
04:30 PM	0	0	0	0	0	1	0	0	0	1	1	3	0	0	4	0	4	1	0	5	10
04:45 PM	0	0	0	0	0	2	0	2	2	6	1	2	0	0	3	0	4	1	0	5	14
Total	0	1	0	0	1	8	1	12	3	24	2	16	0	0	18	0	19	6	0	25	68
05:00 PM	0	0	0	0	0	0	0	1	3	4	1	4	0	0	5	0	3	0	0	3	12
05:15 PM	0	0	0	2	2	1	0	1	0	2	1	1	0	0	2	0	1	0	0	1	7
05:30 PM	0	0	0	0	0	0	0	0	0	0	1	3	0	0	4	0	1	1	0	2	6
05:45 PM	0	0	0	0	0	0	0	1	0	1	0	3	0	0	3	0	4	0	0	4	8
Total	0	0	0	2	2	1	0	3	3	7	3	11	0	0	14	0	9	1	0	10	33
06:00 PM	0	0	0	0	0	0	0	0	0	0	3	1	0	0	4	0	2	0	0	2	6
06:15 PM	0	0	0	0	0	0	0	1	0	1	0	0	0	0	0	0	1	0	0	1	2
06:30 PM	0	0	0	2	2	0	0	0	0	0	1	3	0	0	4	0	5	0	3	8	14
06:45 PM	0	0	0	0	0	0	0	0	0	0	3	3	0	0	6	0	0	0	1	1	7
Total	0	0	0	2	2	0	0	1	0	1	7	7	0	0	14	0	8	0	4	12	29
Grand Total	1	1	2	8	12	23	3	33	11	70	42	126	1	1	170	2	112	41	7	162	414
Apprch %	8.3	8.3	16.7	66.7		32.9	4.3	47.1	15.7		24.7	74.1	0.6	0.6		1.2	69.1	25.3	4.3		
Total %	0.2	0.2	0.5	1.9	2.9	5.6	0.7	8	2.7	16.9	10.1	30.4	0.2	0.2	41.1	0.5	27.1	9.9	1.7	39.1	

Miami Gardens Drive & NW 73rd Avenue

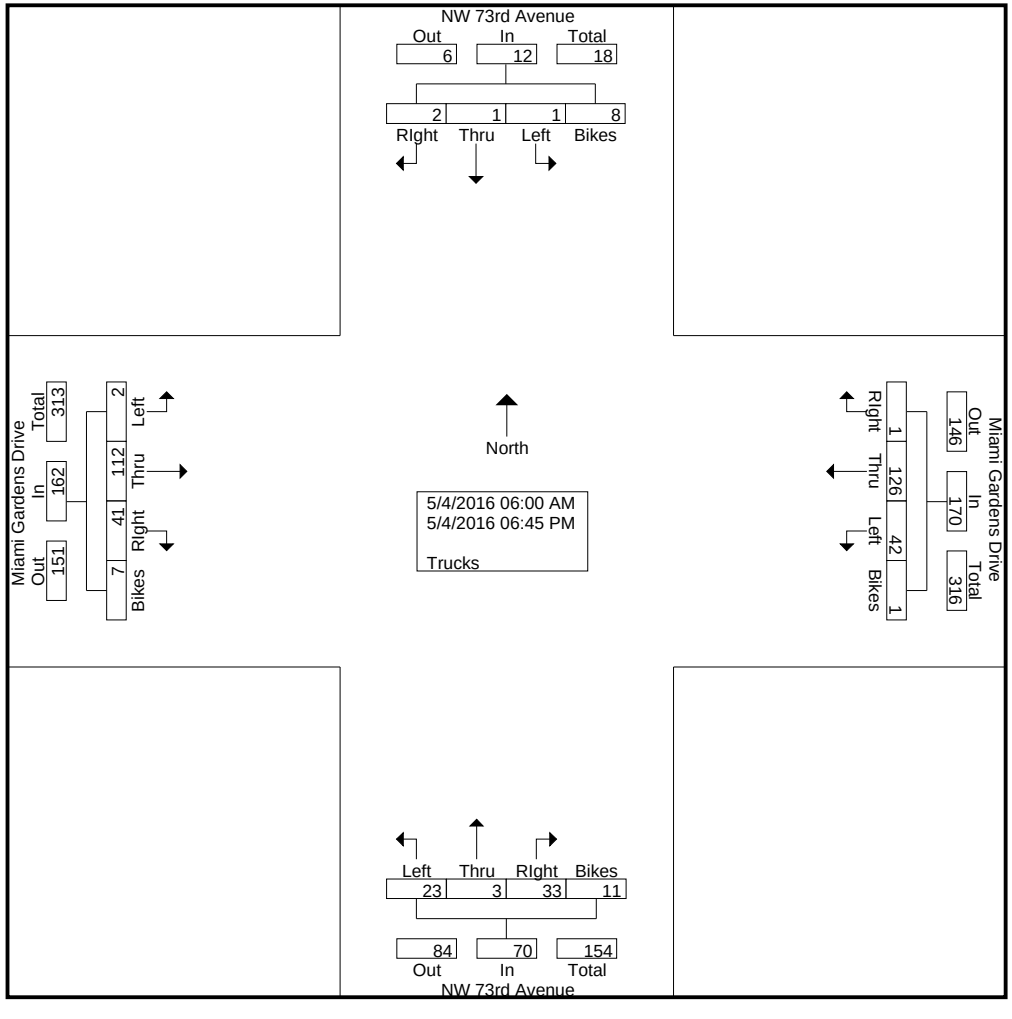

Miami Gardens Drive & NW 73rd Avenue

File Name : Miami Gardens Drive & NW 73rd Avenue
Site Code : 00000000
Start Date : 5/4/2016
Page No : 3

	NW 73rd Avenue Southbound					NW 73rd Avenue Northbound					Miami Gardens Drive Westbound					Miami Gardens Drive Eastbound					
Start Time	Left	Thru	RIght	Bikes	App. Total	Left	Thru	RIght	Bikes	App. Total	Left	Thru	RIght	Bikes	App. Total	Left	Thru	RIght	Bikes	App. Total	Int. Total
Peak Hour Analysis From 06:00 AM to 08:45 AM - Peak 1 of 1																					
Peak Hour for Entire Intersection Begins at 06:15 AM																					
06:15 AM	0	0	0	0	0	0	0	1	0	1	**4**	11	0	0	15	0	5	1	**1**	7	23
06:30 AM	0	0	0	0	0	0	0	1	**1**	**2**	2	**14**	0	0	**16**	0	7	2	0	9	**27**
06:45 AM	0	0	0	0	0	0	0	0	0	0	1	3	0	0	4	0	**13**	2	0	**15**	19
07:00 AM	0	0	0	**2**	**2**	0	0	**2**	0	2	3	3	0	0	6	0	3	**4**	0	7	17
Total Volume	0	0	0	2	2	0	0	4	1	5	10	31	0	0	41	0	28	9	1	38	86
% App. Total	0	0	0	100		0	0	80	20		24.4	75.6	0	0		0	73.7	23.7	2.6		
PHF	.000	.000	.000	.250	.250	.000	.000	.500	.250	.625	.625	.554	.000	.000	.641	.000	.538	.563	.250	.633	.796

Miami Gardens Drive & NW 73rd Avenue

File Name : Miami Gardens Drive & NW 73rd Avenue
Site Code : 00000000
Start Date : 5/4/2016
Page No : 4

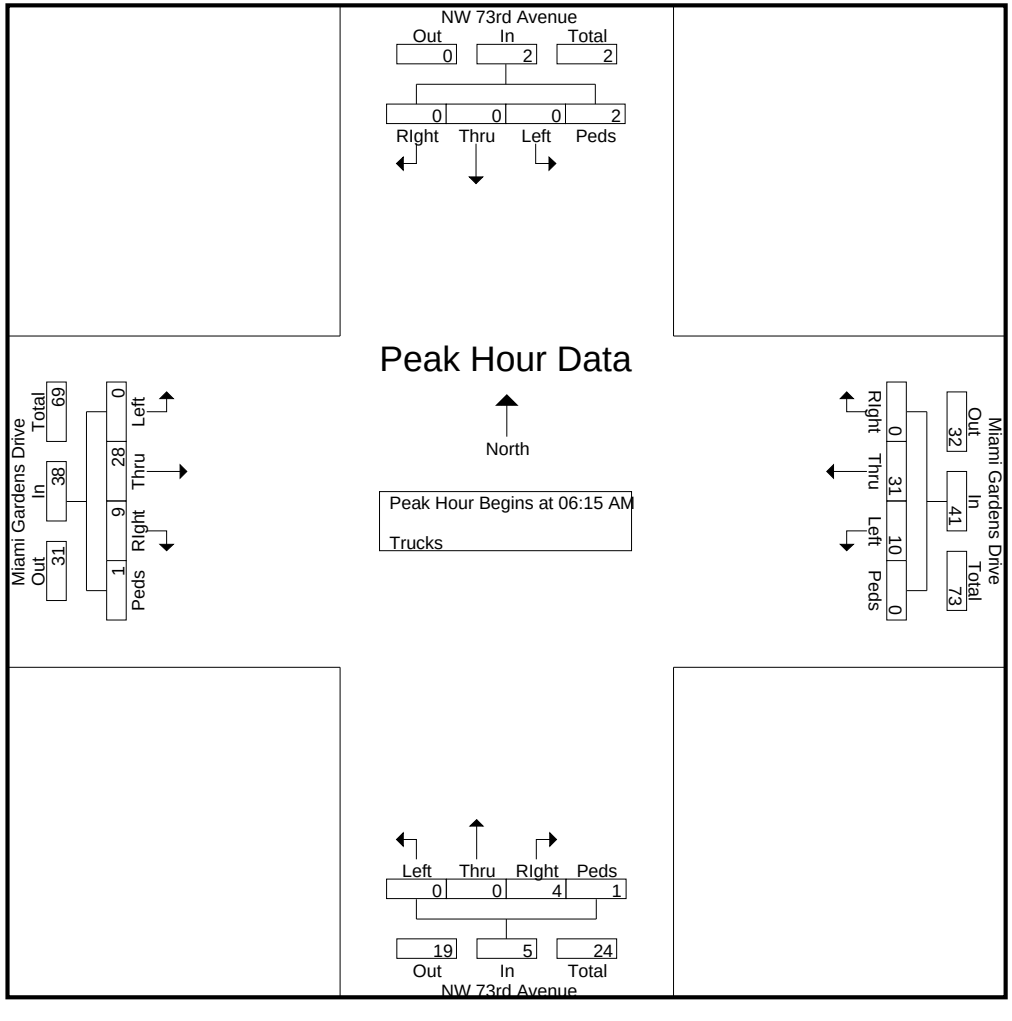

Miami Gardens Drive & NW 73rd Avenue

File Name : Miami Gardens Drive & NW 73rd Avenue
Site Code : 00000000
Start Date : 5/4/2016

	NW 73rd Avenue Southbound					NW 73rd Avenue Northbound					Miami Gardens Drive Westbound					Miami Gardens Drive Eastbound					
Start Time	Left	Thru	RIght	Bikes	App. Total	Left	Thru	RIght	Bikes	App. Total	Left	Thru	RIght	Bikes	App. Total	Left	Thru	RIght	Bikes	App. Total	Int. Total
Peak Hour Analysis From 03:00 PM to 06:45 PM - Peak 1 of 1																					
Peak Hour for Entire Intersection Begins at 03:15 PM																					
03:15 PM	0	0	0	0	0	1	0	3	0	4	1	8	0	0	9	0	5	4	0	**9**	22
03:30 PM	0	0	0	0	0	1	0	1	0	2	1	**11**	0	0	**12**	0	2	3	0	5	19
03:45 PM	0	0	0	0	0	1	0	1	**2**	4	**5**	3	0	0	8	0	0	**7**	0	7	19
04:00 PM	0	**1**	0	0	**1**	**3**	**1**	**10**	1	**15**	0	5	0	0	5	0	**7**	1	0	8	**29**
Total Volume	0	1	0	0	1	6	1	15	3	25	7	27	0	0	34	0	14	15	0	29	89
% App. Total	0	100	0	0		24	4	60	12		20.6	79.4	0	0		0	48.3	51.7	0		
PHF	.000	.250	.000	.000	.250	.500	.250	.375	.375	.417	.350	.614	.000	.000	.708	.000	.500	.536	.000	.806	.767

Miami Gardens Drive & NW 73rd Avenue

File Name : Miami Gardens Drive & NW 73rd Avenue
Site Code : 00000000
Start Date : 5/4/2016
Page No : 6

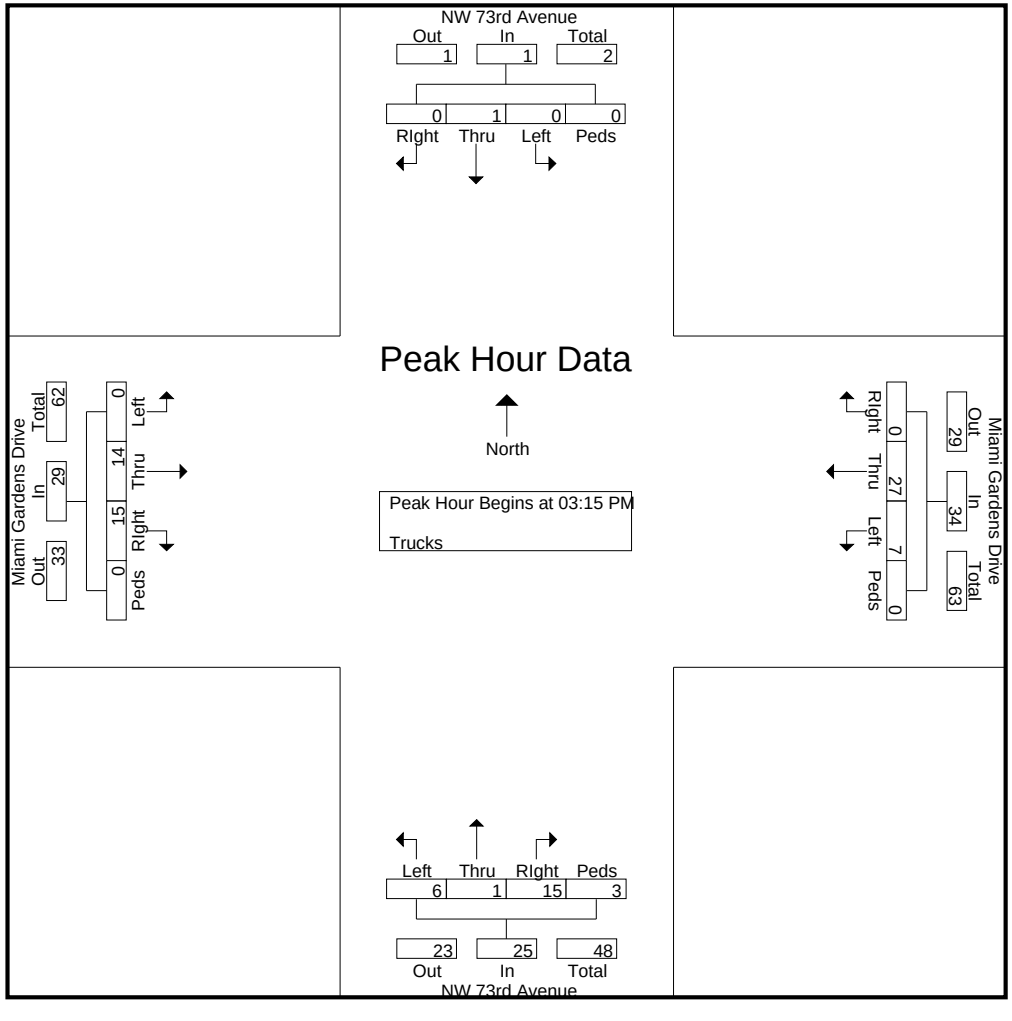

Miami Gardens Drive & NW 73rd Avenue

File Name : Miami Gardens Drive & NW 73rd Avenue
Site Code : 00000000
Start Date : 5/4/2016
Page No : 1

Groups Printed- Turns

	NW 73rd Avenue Southbound					NW 73rd Avenue Northbound					Miami Gardens Drive Westbound					Miami Gardens Drive Eastbound					
Start Time	Left	Thru	RIght	Peds/Bike	App. Total	Left	Thru	RIght	Peds/Bike	App. Total	Left	Thru	RIght	Peds/Bike	App. Total	Left	Thru	RIght	Peds/Bike	App. Total	Int. Total
06:00 AM	0	0	0	0	0	0	0	0	0	0	1	0	0	0	1	0	0	0	0	0	1
*** BREAK ***																					
Total	0	0	0	0	0	0	0	0	0	0	1	0	0	0	1	0	0	0	0	0	1
07:00 AM	0	0	0	0	0	0	0	0	0	0	0	0	0	0	0	1	0	0	0	1	1
*** BREAK ***																					
07:30 AM	0	0	0	0	0	0	0	0	0	0	0	0	0	0	0	1	0	0	0	1	1
07:45 AM	0	0	0	0	0	0	0	0	0	0	1	0	0	0	1	0	0	0	0	0	1
Total	0	0	0	0	0	0	0	0	0	0	1	0	0	0	1	2	0	0	0	2	3
*** BREAK ***																					
08:30 AM	0	0	0	0	0	0	0	0	0	0	1	0	0	0	1	1	0	0	0	1	2
*** BREAK ***																					
Total	0	0	0	0	0	0	0	0	0	0	1	0	0	0	1	1	0	0	0	1	2
*** BREAK ***																					
03:00 PM	0	0	0	0	0	0	0	0	0	0	1	0	0	0	1	0	0	0	0	0	1
*** BREAK ***																					
Total	0	0	0	0	0	0	0	0	0	0	1	0	0	0	1	0	0	0	0	0	1
*** BREAK ***																					
05:30 PM	0	0	0	0	0	0	0	0	0	0	2	0	0	0	2	0	0	0	0	0	2
05:45 PM	0	0	0	0	0	0	0	0	0	0	3	0	0	0	3	0	0	0	0	0	3
Total	0	0	0	0	0	0	0	0	0	0	5	0	0	0	5	0	0	0	0	0	5
06:00 PM	0	0	0	0	0	0	0	0	0	0	1	0	0	0	1	0	0	0	0	0	1
*** BREAK ***																					
06:45 PM	0	0	0	0	0	0	0	0	0	0	0	0	0	0	0	2	0	0	0	2	2
Total	0	0	0	0	0	0	0	0	0	0	1	0	0	0	1	2	0	0	0	2	3
Grand Total	0	0	0	0	0	0	0	0	0	0	10	0	0	0	10	5	0	0	0	5	15
Apprch %	0	0	0	0		0	0	0	0		100	0	0	0		100	0	0	0		
Total %	0	0	0	0	0	0	0	0	0	0	66.7	0	0	0	66.7	33.3	0	0	0	33.3	

Miami Gardens Drive & NW 73rd Avenue

File Name : Miami Gardens Drive & NW 73rd Avenue
Site Code : 00000000
Start Date : 5/4/2016
Page No : 2

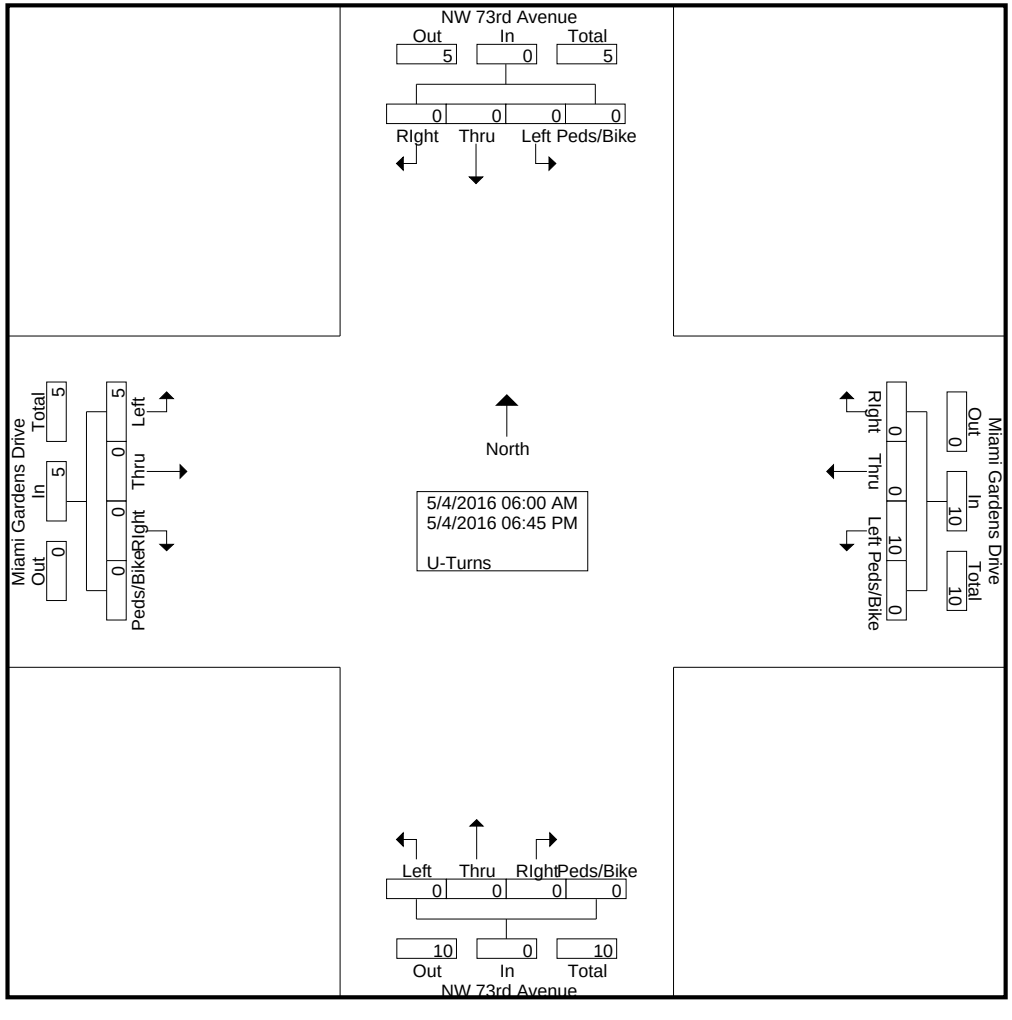

Miami Gardens Drive & NW 73rd Avenue

File Name : Miami Gardens Drive & NW 73rd Avenue
Site Code : 00000000
Start Date : 5/4/2016
Page No : 3

	NW 73rd Avenue Southbound					NW 73rd Avenue Northbound					Miami Gardens Drive Westbound					Miami Gardens Drive Eastbound					
Start Time	Left	Thru	RIght	Peds/Bike	App. Total	Left	Thru	RIght	Peds/Bike	App. Total	Left	Thru	RIght	Peds/Bike	App. Total	Left	Thru	RIght	Peds/Bike	App. Total	Int. Total
Peak Hour Analysis From 06:00 AM to 08:45 AM - Peak 1 of 1																					
Peak Hour for Entire Intersection Begins at 07:00 AM																					
07:00 AM	0	0	0	0	0	0	0	0	0	0	0	0	0	0	0	**1**	0	0	0	**1**	**1**
07:15 AM	0	0	0	0	0	0	0	0	0	0	0	0	0	0	0	0	0	0	0	0	0
07:30 AM	0	0	0	0	0	0	0	0	0	0	0	0	0	0	0	1	0	0	0	1	1
07:45 AM	0	0	0	0	0	0	0	0	0	0	**1**	0	0	0	**1**	0	0	0	0	0	1
Total Volume	0	0	0	0	0	0	0	0	0	0	1	0	0	0	1	2	0	0	0	2	3
% App. Total	0	0	0	0		0	0	0	0		100	0	0	0		100	0	0	0		
PHF	.000	.000	.000	.000	.000	.000	.000	.000	.000	.000	.250	.000	.000	.000	.250	.500	.000	.000	.000	.500	.750

Miami Gardens Drive & NW 73rd Avenue

File Name : Miami Gardens Drive & NW 73rd Avenue
Site Code : 00000000
Start Date : 5/4/2016
Page No : 4

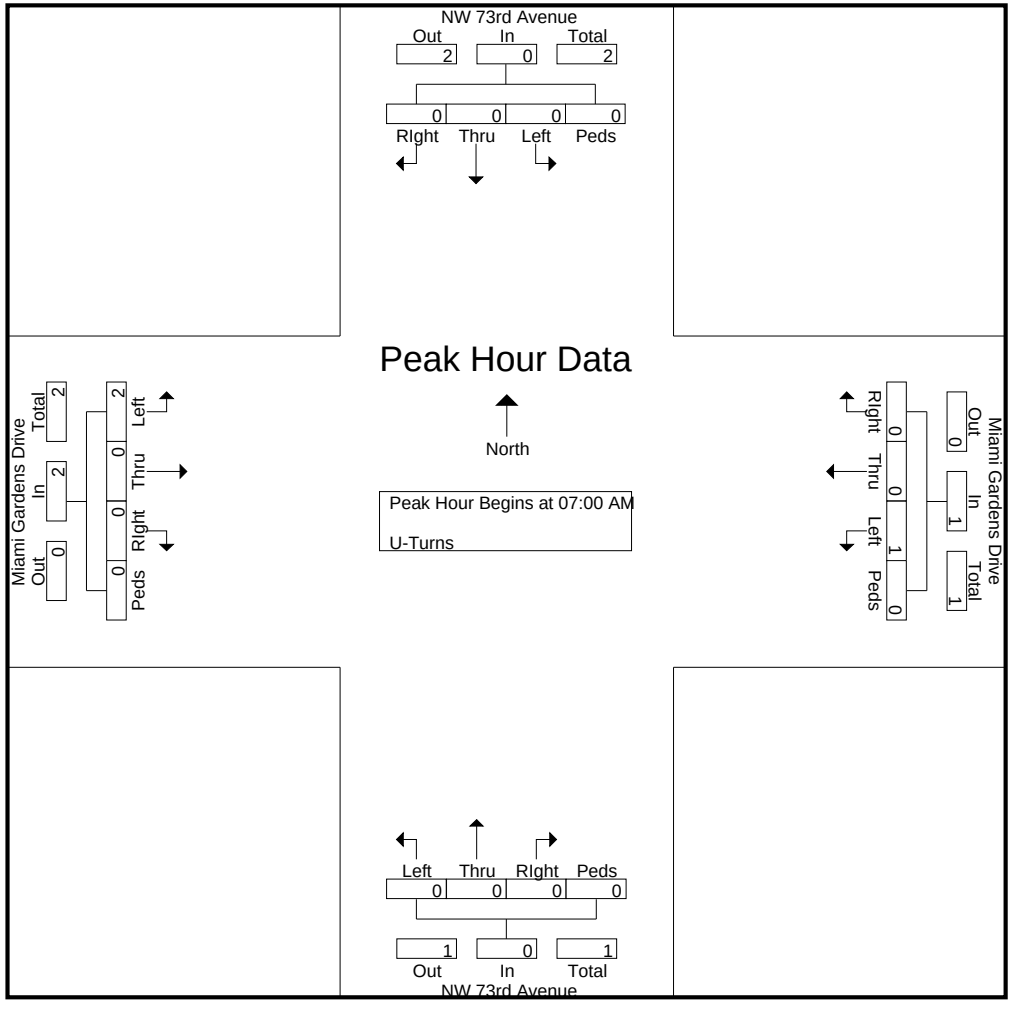

Miami Gardens Drive & NW 73rd Avenue

File Name : Miami Gardens Drive & NW 73rd Avenue
Site Code : 00000000
Start Date : 5/4/2016
Page No : 5

	NW 73rd Avenue Southbound					NW 73rd Avenue Northbound					Miami Gardens Drive Westbound					Miami Gardens Drive Eastbound					
Start Time	Left	Thru	RIght	Peds/Bike	App. Total	Left	Thru	RIght	Peds/Bike	App. Total	Left	Thru	RIght	Peds/Bike	App. Total	Left	Thru	RIght	Peds/Bike	App. Total	Int. Total
Peak Hour Analysis From 03:00 PM to 06:45 PM - Peak 1 of 1																					
Peak Hour for Entire Intersection Begins at 05:15 PM																					
05:15 PM	0	0	0	0	0	0	0	0	0	0	0	0	0	0	0	0	0	0	0	0	0
05:30 PM	0	0	0	0	0	0	0	0	0	0	2	0	0	0	2	0	0	0	0	0	2
05:45 PM	0	0	0	0	0	0	0	0	0	0	**3**	0	0	0	**3**	0	0	0	0	0	**3**
06:00 PM	0	0	0	0	0	0	0	0	0	0	1	0	0	0	1	0	0	0	0	0	1
Total Volume	0	0	0	0	0	0	0	0	0	0	6	0	0	0	6	0	0	0	0	0	6
% App. Total	0	0	0	0		0	0	0	0		100	0	0	0		0	0	0	0		
PHF	.000	.000	.000	.000	.000	.000	.000	.000	.000	.000	.500	.000	.000	.000	.500	.000	.000	.000	.000	.000	.500

Miami Gardens Drive & NW 73rd Avenue

File Name : Miami Gardens Drive & NW 73rd Avenue
Site Code : 00000000
Start Date : 5/4/2016
Page No : 6

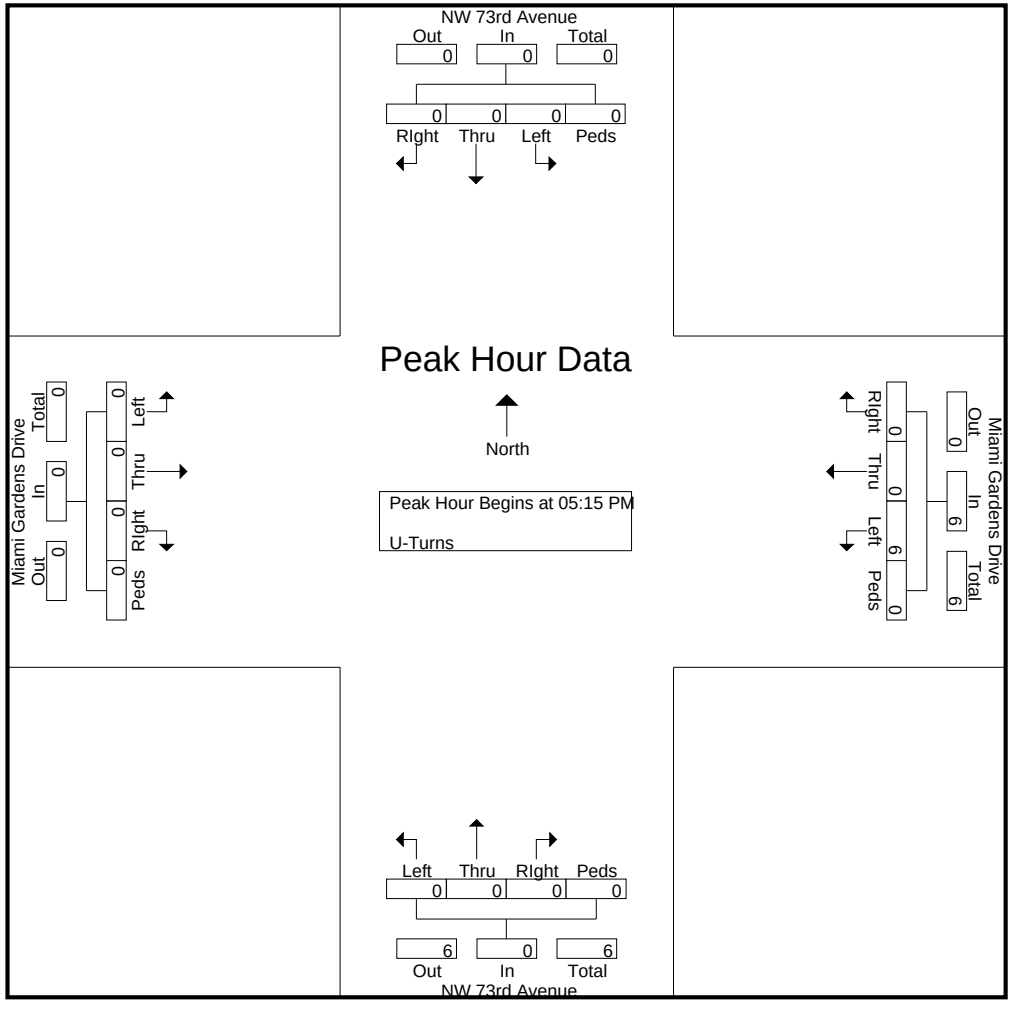

Miami Gardens Drive & NW 73rd Avenue

File Name : Miami Gardens Drive & NW 73rd Avenue
Site Code : 00000000
Start Date : 5/4/2016
Page No : 1

Groups Printed- Veh - Trucks - Turns

	NW 73rd Avenue Southbound					NW 73rd Avenue Northbound					Miami Gardens Drive Westbound					Miami Gardens Drive Eastbound					
Start Time	Left	Thru	RIght	Peds/Bike	App. Total	Left	Thru	RIght	Peds/Bike	App. Total	Left	Thru	RIght	Peds/Bike	App. Total	Left	Thru	RIght	Peds/Bike	App. Total	Int. Total
06:00 AM	1	0	6	0	7	15	0	23	12	50	3	90	0	0	93	2	101	4	0	107	257
06:15 AM	1	2	7	1	11	24	0	23	3	50	9	165	0	0	174	1	101	10	4	116	351
06:30 AM	2	0	11	0	13	68	2	37	4	111	7	298	1	0	306	1	168	6	0	175	605
06:45 AM	4	1	18	0	23	72	0	40	3	115	11	373	2	0	386	4	218	11	0	233	757
Total	8	3	42	1	54	179	2	123	22	326	30	926	3	0	959	8	588	31	4	631	1970
07:00 AM	8	1	13	3	25	131	0	55	3	189	11	360	1	1	373	2	229	18	0	249	836
07:15 AM	2	1	9	0	12	100	2	54	7	163	10	356	0	0	366	5	266	28	0	299	840
07:30 AM	8	3	19	2	32	93	0	40	4	137	9	365	5	0	379	9	152	16	4	181	729
07:45 AM	4	2	17	3	26	66	5	19	3	93	9	355	4	0	368	9	212	18	1	240	727
Total	22	7	58	8	95	390	7	168	17	582	39	1436	10	1	1486	25	859	80	5	969	3132
08:00 AM	3	2	22	0	27	82	1	23	3	109	8	324	2	2	336	8	199	34	2	243	715
08:15 AM	3	0	10	1	14	72	1	16	2	91	14	391	2	0	407	15	206	68	5	294	806
08:30 AM	1	0	4	2	7	52	0	18	7	77	10	317	2	0	329	29	198	39	5	271	684
08:45 AM	2	2	9	1	14	38	0	7	2	47	11	320	1	0	332	8	198	52	2	260	653
Total	9	4	45	4	62	244	2	64	14	324	43	1352	7	2	1404	60	801	193	14	1068	2858
*** BREAK ***																					
03:00 PM	8	1	6	0	15	32	0	12	2	46	14	235	6	0	255	5	238	20	0	263	579
03:15 PM	4	0	4	1	9	20	0	11	1	32	12	254	4	0	270	8	195	44	3	250	561
03:30 PM	1	3	4	0	8	30	0	17	0	47	18	291	3	0	312	12	193	44	0	249	616
03:45 PM	2	0	1	1	4	23	0	16	13	52	23	281	12	0	316	12	302	57	1	372	744
Total	15	4	15	2	36	105	0	56	16	177	67	1061	25	0	1153	37	928	165	4	1134	2500
04:00 PM	4	2	5	4	15	20	1	42	15	78	18	244	2	2	266	3	331	49	7	390	749
04:15 PM	2	1	1	0	4	28	0	20	6	54	13	254	7	0	274	9	289	54	3	355	687
04:30 PM	4	2	4	1	11	23	0	11	4	38	18	225	3	1	247	5	254	48	4	311	607
04:45 PM	1	0	0	3	4	19	2	21	2	44	11	262	8	1	282	7	309	42	2	360	690
Total	11	5	10	8	34	90	3	94	27	214	60	985	20	4	1069	24	1183	193	16	1416	2733
05:00 PM	2	1	5	1	9	37	1	16	3	57	16	308	8	0	332	20	313	71	2	406	804
05:15 PM	3	1	3	2	9	19	0	31	1	51	24	313	10	0	347	14	348	69	0	431	838
05:30 PM	5	0	4	3	12	15	0	20	2	37	32	326	4	0	362	13	320	84	2	419	830
05:45 PM	2	0	3	0	5	23	1	16	6	46	29	315	7	0	351	16	324	61	2	403	805
Total	12	2	15	6	35	94	2	83	12	191	101	1262	29	0	1392	63	1305	285	6	1659	3277
06:00 PM	0	0	6	2	8	28	0	25	1	54	37	292	3	2	334	26	383	56	2	467	863
06:15 PM	5	1	6	2	14	34	0	28	5	67	25	328	7	0	360	16	289	84	2	391	832
06:30 PM	7	1	4	4	16	26	0	29	3	58	26	289	5	0	320	16	363	60	4	443	837
06:45 PM	2	1	3	0	6	16	2	12	1	31	24	281	5	0	310	23	252	46	1	322	669
Total	14	3	19	8	44	104	2	94	10	210	112	1190	20	2	1324	81	1287	246	9	1623	3201
Grand Total	91	28	204	37	360	1206	18	682	118	2024	452	8212	114	9	8787	298	6951	1193	58	8500	19671
Apprch %	25.3	7.8	56.7	10.3		59.6	0.9	33.7	5.8		5.1	93.5	1.3	0.1		3.5	81.8	14	0.7		
Total %	0.5	0.1	1	0.2	1.8	6.1	0.1	3.5	0.6	10.3	2.3	41.7	0.6	0	44.7	1.5	35.3	6.1	0.3	43.2	

Miami Gardens Drive & NW 73rd Avenue

File Name : Miami Gardens Drive & NW 73rd Avenue
Site Code : 00000000
Start Date : 5/4/2016
Page No : 2

Groups Printed- Veh - Trucks - Turns

	NW 73rd Avenue Southbound					NW 73rd Avenue Northbound					Miami Gardens Drive Westbound					Miami Gardens Drive Eastbound					
	Left	Thru	RIght	Peds/Bike	App. Total	Left	Thru	RIght	Peds/Bike	App. Total	Left	Thru	RIght	Peds/Bike	App. Total	Left	Thru	RIght	Peds/Bike	App. Total	Int. Total
Veh	90	27	202	29	348	1183	15	649	107	1954	400	8086	113	8	8607	291	6839	1152	51	8333	19242
% Veh	98.9	96.4	99	78.4	96.7	98.1	83.3	95.2	90.7	96.5	88.5	98.5	99.1	88.9	98	97.7	98.4	96.6	87.9	98	97.8
Trucks	1	1	2	8	12	23	3	33	11	70	42	126	1	1	170	2	112	41	7	162	414
% Trucks	1.1	3.6	1	21.6	3.3	1.9	16.7	4.8	9.3	3.5	9.3	1.5	0.9	11.1	1.9	0.7	1.6	3.4	12.1	1.9	2.1
U-Turns	0	0	0	0	0	0	0	0	0	0	10	0	0	0	10	5	0	0	0	5	15
% U-Turns	0	0	0	0	0	0	0	0	0	0	2.2	0	0	0	0.1	1.7	0	0	0	0.1	0.1

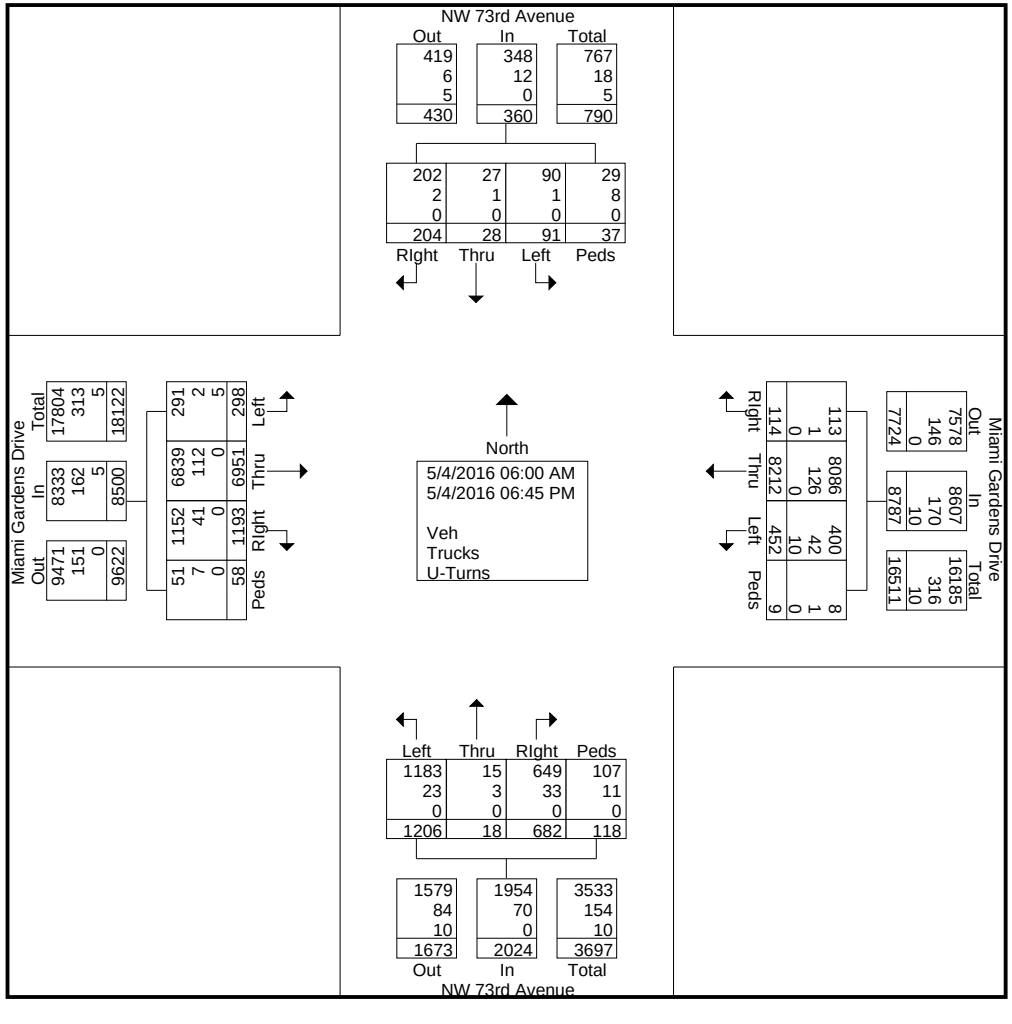

Miami Gardens Drive & NW 73rd Avenue

File Name : Miami Gardens Drive & NW 73rd Avenue
Site Code : 00000000
Start Date : 5/4/2016
Page No : 3

	NW 73rd Avenue Southbound					NW 73rd Avenue Northbound					Miami Gardens Drive Westbound					Miami Gardens Drive Eastbound					
Start Time	Left	Thru	RIght	Peds/Bike	App. Total	Left	Thru	RIght	Peds/Bike	App. Total	Left	Thru	RIght	Peds/Bike	App. Total	Left	Thru	RIght	Peds/Bike	App. Total	Int. Total
Peak Hour Analysis From 06:00 AM to 08:45 AM - Peak 1 of 1																					
Peak Hour for Entire Intersection Begins at 06:45 AM																					
06:45 AM	4	1	18	0	23	72	0	40	3	115	**11**	**373**	2	0	**386**	4	218	11	0	233	757
07:00 AM	**8**	1	13	**3**	25	**131**	0	**55**	3	**189**	11	360	1	**1**	373	2	229	18	0	249	836
07:15 AM	2	1	9	0	12	100	**2**	54	**7**	163	10	356	0	0	366	5	**266**	**28**	0	**299**	**840**
07:30 AM	8	**3**	**19**	2	**32**	93	0	40	4	137	9	365	**5**	0	379	**9**	152	16	**4**	181	729
Total Volume	22	6	59	5	92	396	2	189	17	604	41	1454	8	1	1504	20	865	73	4	962	3162
% App. Total	23.9	6.5	64.1	5.4		65.6	0.3	31.3	2.8		2.7	96.7	0.5	0.1		2.1	89.9	7.6	0.4		
PHF	.688	.500	.776	.417	.719	.756	.250	.859	.607	.799	.932	.975	.400	.250	.974	.556	.813	.652	.250	.804	.941

Miami Gardens Drive & NW 73rd Avenue

File Name : Miami Gardens Drive & NW 73rd Avenue
Site Code : 00000000
Start Date : 5/4/2016
Page No : 4

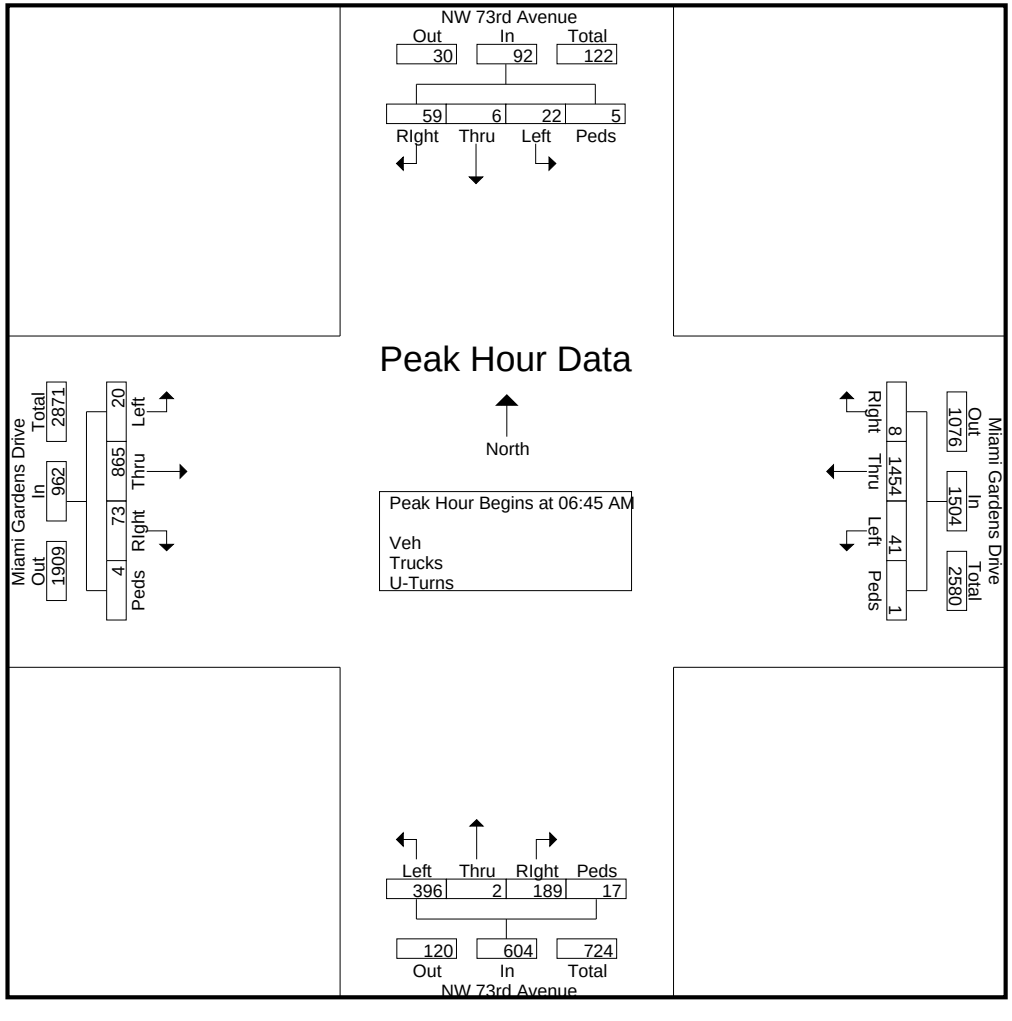

Miami Gardens Drive & NW 73rd Avenue

File Name : Miami Gardens Drive & NW 73rd Avenue
Site Code : 00000000
Start Date : 5/4/2016
Page No : 5

	NW 73rd Avenue Southbound					NW 73rd Avenue Northbound					Miami Gardens Drive Westbound					Miami Gardens Drive Eastbound					
Start Time	Left	Thru	RIght	Peds/Bike	App. Total	Left	Thru	RIght	Peds/Bike	App. Total	Left	Thru	RIght	Peds/Bike	App. Total	Left	Thru	RIght	Peds/Bike	App. Total	Int. Total
Peak Hour Analysis From 03:00 PM to 06:45 PM - Peak 1 of 1																					
Peak Hour for Entire Intersection Begins at 05:45 PM																					
05:45 PM	2	0	3	0	5	23	**1**	16	**6**	46	29	315	**7**	0	351	16	324	61	2	403	805
06:00 PM	0	0	**6**	2	8	28	0	25	1	54	**37**	292	3	**2**	334	**26**	**383**	56	2	**467**	**863**
06:15 PM	5	**1**	6	2	14	**34**	0	28	5	**67**	25	**328**	7	0	**360**	16	289	**84**	2	391	832
06:30 PM	**7**	1	4	**4**	**16**	26	0	**29**	3	58	26	289	5	0	320	16	363	60	**4**	443	837
Total Volume	14	2	19	8	43	111	1	98	15	225	117	1224	22	2	1365	74	1359	261	10	1704	3337
% App. Total	32.6	4.7	44.2	18.6		49.3	0.4	43.6	6.7		8.6	89.7	1.6	0.1		4.3	79.8	15.3	0.6		
PHF	.500	.500	.792	.500	.672	.816	.250	.845	.625	.840	.791	.933	.786	.250	.948	.712	.887	.777	.625	.912	.967

Miami Gardens Drive & NW 73rd Avenue

File Name : Miami Gardens Drive & NW 73rd Avenue
Site Code : 00000000
Start Date : 5/4/2016
Page No : 6

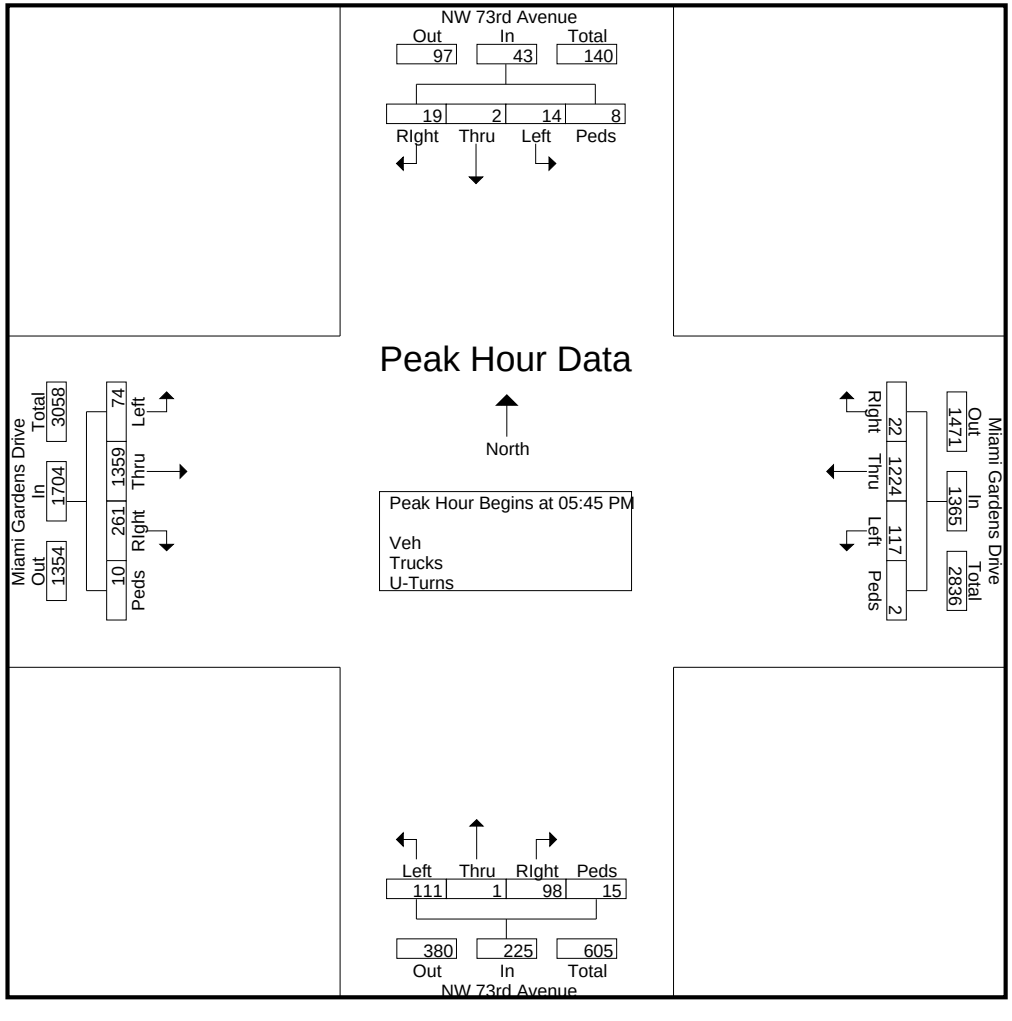

Miami Gardens Drive & NW 68th Avenue

File Name : Miami Gardens Drive & NW 68th Avenue
Site Code : 00000000
Start Date : 5/11/2016
Page No : 1

Groups Printed- Trucks

	NW 68th Avenue Southbound					NW 68th Avenue Northbound					Miami Gardens Drive Westbound					Miami Gardens Drive Eastbound					
Start Time	Left	Thru	RIght	Bikes	App. Total	Left	Thru	RIght	Bikes	App. Total	Left	Thru	RIght	Bikes	App. Total	Left	Thru	RIght	Bikes	App. Total	Int. Total
06:00 AM	0	0	0	0	0	1	0	1	0	2	0	6	0	0	6	1	5	4	0	10	18
06:15 AM	0	1	0	0	1	6	0	2	0	8	3	10	0	0	13	1	5	3	1	10	32
06:30 AM	0	0	0	0	0	0	0	3	1	4	1	6	0	0	7	0	6	1	0	7	18
06:45 AM	0	0	0	1	1	4	0	1	0	5	2	3	0	0	5	0	5	4	1	10	21
Total	0	1	0	1	2	11	0	7	1	19	6	25	0	0	31	2	21	12	2	37	89
07:00 AM	0	0	0	0	0	1	0	2	1	4	1	5	0	1	7	0	5	2	1	8	19
07:15 AM	0	0	0	1	1	0	0	1	0	1	1	8	0	1	10	0	4	3	0	7	19
07:30 AM	0	0	0	4	4	2	0	2	0	4	2	7	0	0	9	0	5	0	0	5	22
07:45 AM	0	0	0	0	0	1	0	0	1	2	1	3	0	0	4	0	2	1	0	3	9
Total	0	0	0	5	5	4	0	5	2	11	5	23	0	2	30	0	16	6	1	23	69
08:00 AM	0	0	0	0	0	0	0	1	1	2	0	7	0	0	7	0	6	2	0	8	17
08:15 AM	0	0	0	0	0	1	0	1	0	2	1	6	0	0	7	0	7	1	0	8	17
08:30 AM	0	0	0	0	0	0	0	1	0	1	1	6	0	0	7	0	5	1	0	6	14
08:45 AM	0	0	0	0	0	1	0	4	0	5	0	8	0	1	9	0	3	1	0	4	18
Total	0	0	0	0	0	2	0	7	1	10	2	27	0	1	30	0	21	5	0	26	66
*** BREAK ***																					
03:00 PM	0	0	0	0	0	1	0	5	2	8	0	8	0	0	8	0	6	0	0	6	22
03:15 PM	0	0	0	1	1	2	0	2	2	6	1	9	0	0	10	0	4	1	0	5	22
03:30 PM	0	0	0	1	1	1	0	0	0	1	1	8	0	0	9	0	0	1	0	1	12
03:45 PM	0	0	0	1	1	1	0	1	0	2	0	4	0	0	4	0	4	2	0	6	13
Total	0	0	0	3	3	5	0	8	4	17	2	29	0	0	31	0	14	4	0	18	69
04:00 PM	0	0	0	1	1	2	0	4	1	7	0	2	0	3	5	0	15	3	0	18	31
04:15 PM	0	0	0	2	2	2	0	3	2	7	0	7	0	0	7	0	7	1	0	8	24
04:30 PM	0	0	0	0	0	2	0	3	1	6	0	4	0	0	4	0	2	1	0	3	13
04:45 PM	0	0	0	1	1	2	0	1	0	3	1	3	0	0	4	0	5	0	0	5	13
Total	0	0	0	4	4	8	0	11	4	23	1	16	0	3	20	0	29	5	0	34	81
05:00 PM	0	0	0	2	2	1	0	1	0	2	0	5	0	0	5	0	2	2	0	4	13
05:15 PM	0	0	0	2	2	0	0	0	2	2	2	1	0	0	3	0	1	0	0	1	8
05:30 PM	0	0	0	0	0	1	0	1	0	2	1	2	0	0	3	0	2	0	0	2	7
05:45 PM	0	0	0	1	1	2	0	0	0	2	1	2	0	0	3	0	2	0	0	2	8
Total	0	0	0	5	5	4	0	2	2	8	4	10	0	0	14	0	7	2	0	9	36
06:00 PM	0	0	0	1	1	1	0	1	1	3	1	2	0	0	3	0	1	0	0	1	8
06:15 PM	0	0	0	1	1	0	0	1	2	3	1	2	0	0	3	0	1	0	1	2	9
06:30 PM	0	0	0	1	1	0	0	0	2	2	1	2	0	0	3	0	2	0	0	2	8
06:45 PM	0	0	0	0	0	1	0	3	0	4	1	5	0	0	6	0	1	0	1	2	12
Total	0	0	0	3	3	2	0	5	5	12	4	11	0	0	15	0	5	0	2	7	37
Grand Total	0	1	0	21	22	36	0	45	19	100	24	141	0	6	171	2	113	34	5	154	447
Apprch %	0	4.5	0	95.5		36	0	45	19		14	82.5	0	3.5		1.3	73.4	22.1	3.2		
Total %	0	0.2	0	4.7	4.9	8.1	0	10.1	4.3	22.4	5.4	31.5	0	1.3	38.3	0.4	25.3	7.6	1.1	34.5	

Miami Gardens Drive & NW 68th Avenue

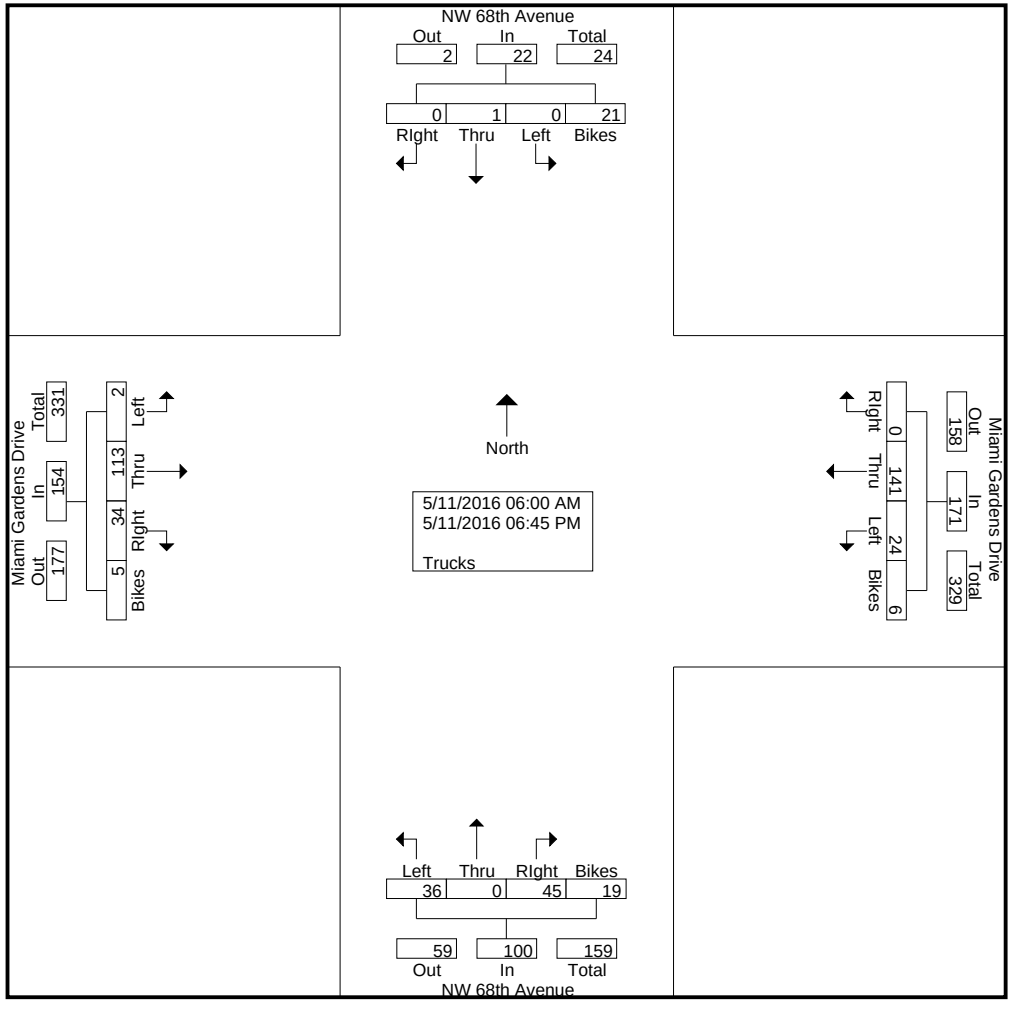

Miami Gardens Drive & NW 68th Avenue

File Name : Miami Gardens Drive & NW 68th Avenue
Site Code : 00000000
Start Date : 5/11/2016
Page No : 3

	NW 68th Avenue Southbound					NW 68th Avenue Northbound					Miami Gardens Drive Westbound					Miami Gardens Drive Eastbound					
Start Time	Left	Thru	RIght	Bikes	App. Total	Left	Thru	RIght	Bikes	App. Total	Left	Thru	RIght	Bikes	App. Total	Left	Thru	RIght	Bikes	App. Total	Int. Total
Peak Hour Analysis From 06:00 AM to 08:45 AM - Peak 1 of 1																					
Peak Hour for Entire Intersection Begins at 06:15 AM																					
06:15 AM	0	**1**	0	0	**1**	**6**	0	2	0	**8**	**3**	**10**	0	0	**13**	**1**	5	3	**1**	**10**	**32**
06:30 AM	0	0	0	0	0	0	0	**3**	**1**	4	1	6	0	0	7	0	**6**	1	0	7	18
06:45 AM	0	0	0	**1**	1	4	0	1	0	5	2	3	0	0	5	0	5	**4**	1	10	21
07:00 AM	0	0	0	0	0	1	0	2	1	4	1	5	0	**1**	7	0	5	2	1	8	19
Total Volume	0	1	0	1	2	11	0	8	2	21	7	24	0	1	32	1	21	10	3	35	90
% App. Total	0	50	0	50		52.4	0	38.1	9.5		21.9	75	0	3.1		2.9	60	28.6	8.6		
PHF	.000	.250	.000	.250	.500	.458	.000	.667	.500	.656	.583	.600	.000	.250	.615	.250	.875	.625	.750	.875	.703

Miami Gardens Drive & NW 68th Avenue

File Name : Miami Gardens Drive & NW 68th Avenue
Site Code : 00000000
Start Date : 5/11/2016
Page No : 4

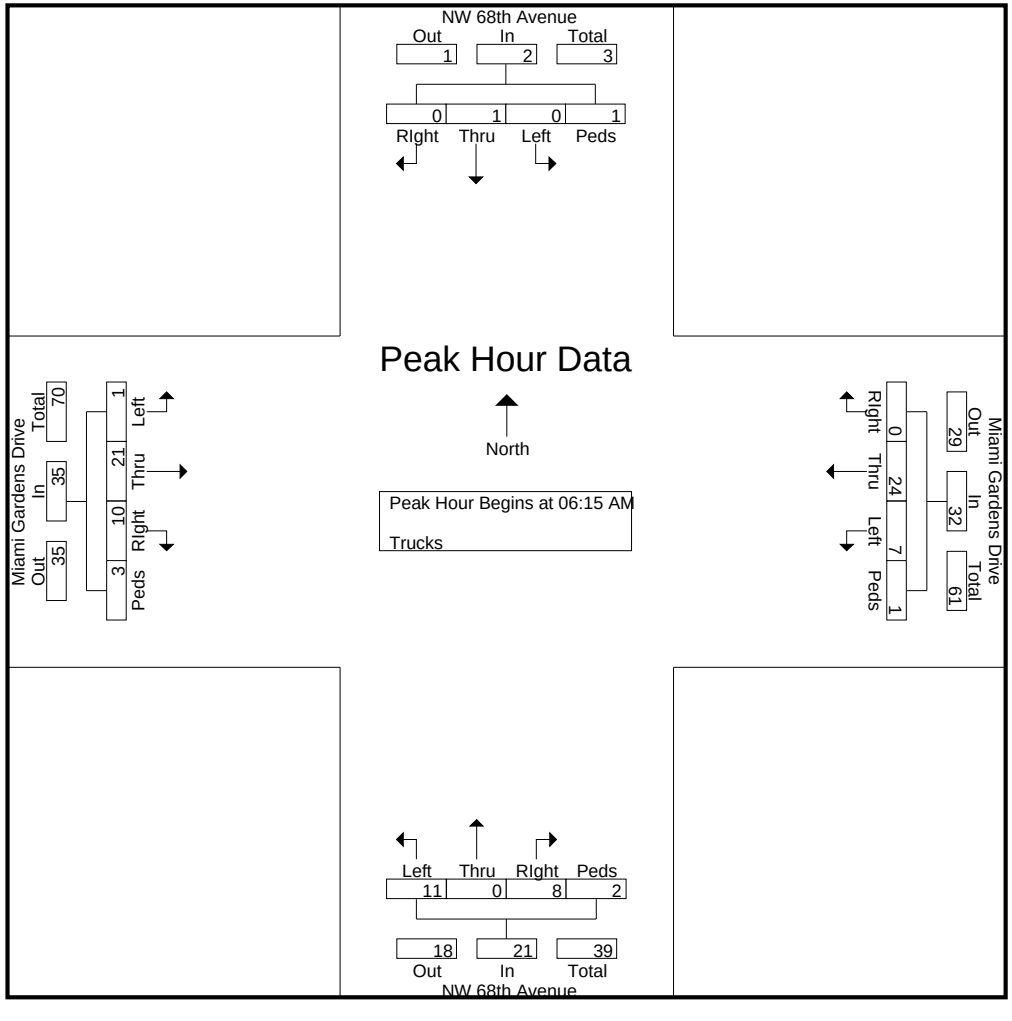

Miami Gardens Drive & NW 68th Avenue

File Name : Miami Gardens Drive & NW 68th Avenue
Site Code : 00000000
Start Date : 5/11/2016
Page No : 5

	NW 68th Avenue Southbound					NW 68th Avenue Northbound					Miami Gardens Drive Westbound					Miami Gardens Drive Eastbound					
Start Time	Left	Thru	RIght	Bikes	App. Total	Left	Thru	RIght	Bikes	App. Total	Left	Thru	RIght	Bikes	App. Total	Left	Thru	RIght	Bikes	App. Total	Int. Total
Peak Hour Analysis From 03:00 PM to 06:45 PM - Peak 1 of 1																					
Peak Hour for Entire Intersection Begins at 03:45 PM																					
03:45 PM	0	0	0	1	1	1	0	1	0	2	0	4	0	0	4	0	4	2	0	6	13
04:00 PM	0	0	0	1	1	**2**	0	**4**	1	**7**	0	2	0	**3**	5	0	**15**	**3**	0	**18**	**31**
04:15 PM	0	0	0	**2**	**2**	2	0	3	**2**	7	0	**7**	0	0	**7**	0	7	1	0	8	24
04:30 PM	0	0	0	0	0	2	0	3	1	6	0	4	0	0	4	0	2	1	0	3	13
Total Volume	0	0	0	4	4	7	0	11	4	22	0	17	0	3	20	0	28	7	0	35	81
% App. Total	0	0	0	100		31.8	0	50	18.2		0	85	0	15		0	80	20	0		
PHF	.000	.000	.000	.500	.500	.875	.000	.688	.500	.786	.000	.607	.000	.250	.714	.000	.467	.583	.000	.486	.653

Miami Gardens Drive & NW 68th Avenue

File Name : Miami Gardens Drive & NW 68th Avenue
Site Code : 00000000
Start Date : 5/11/2016
Page No : 6

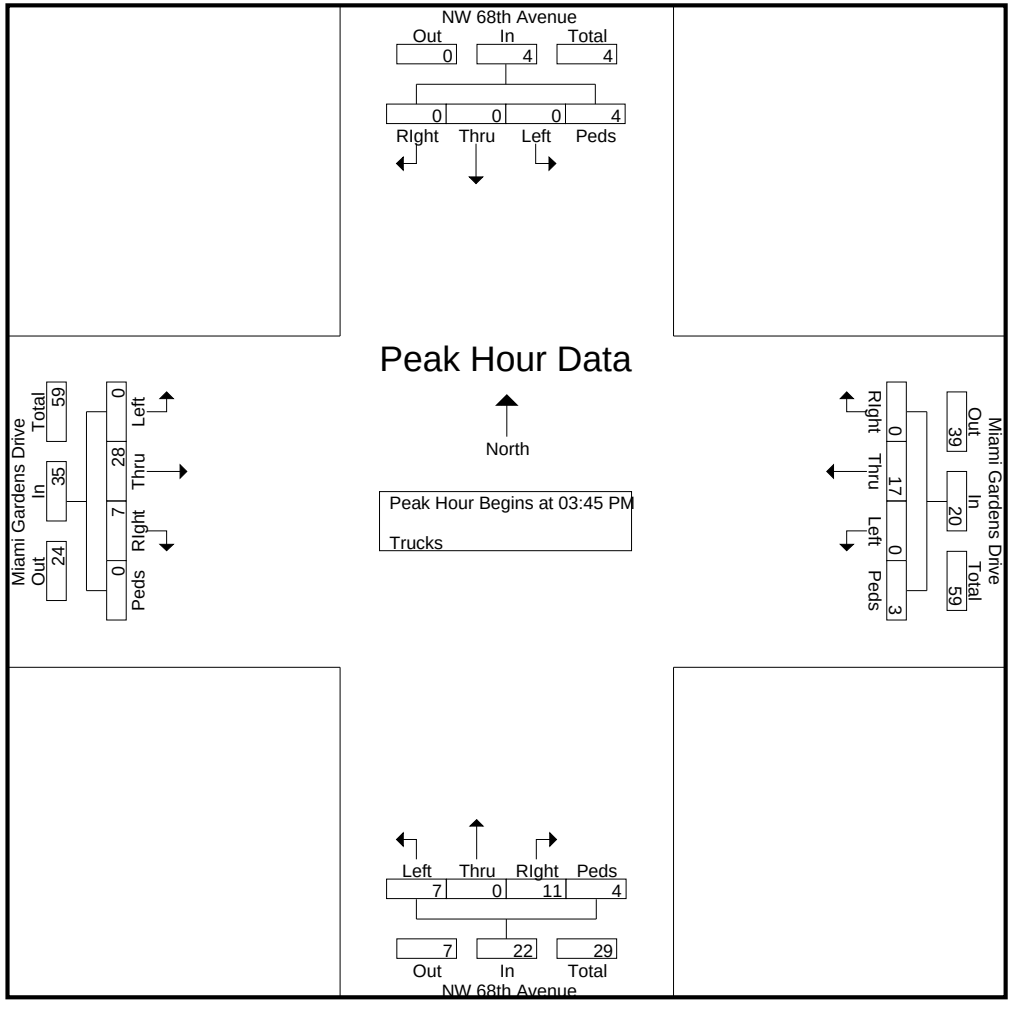

Miami Gardens Drive & NW 68th Avenue

File Name : Miami Gardens Drive & NW 68th Avenue
Site Code : 00000000
Start Date : 5/11/2016
Page No : 1

Groups Printed- Turns

	NW 68th Avenue Southbound					NW 68th Avenue Northbound					Miami Gardens Drive Westbound					Miami Gardens Drive Eastbound					
Start Time	Left	Thru	RIght	Peds/Bike	App. Total	Left	Thru	RIght	Peds/Bike	App. Total	Left	Thru	RIght	Peds/Bike	App. Total	Left	Thru	RIght	Peds/Bike	App. Total	Int. Total
*** BREAK ***																					
06:15 AM	0	0	0	0	0	0	0	0	0	0	1	0	0	0	1	0	0	0	0	0	1
*** BREAK ***																					
Total	0	0	0	0	0	0	0	0	0	0	1	0	0	0	1	0	0	0	0	0	1
07:00 AM	0	0	0	0	0	0	0	0	0	0	0	0	0	0	0	1	0	0	0	1	1
*** BREAK ***																					
Total	0	0	0	0	0	0	0	0	0	0	0	0	0	0	0	1	0	0	0	1	1
*** BREAK ***																					
08:15 AM	0	0	0	0	0	0	0	0	0	0	1	0	0	0	1	0	0	0	0	0	1
08:30 AM	0	0	0	0	0	0	0	0	0	0	0	0	0	0	0	1	0	0	0	1	1
*** BREAK ***																					
Total	0	0	0	0	0	0	0	0	0	0	1	0	0	0	1	1	0	0	0	1	2
*** BREAK ***																					
04:00 PM	0	0	0	0	0	0	0	0	0	0	1	0	0	0	1	0	0	0	0	0	1
*** BREAK ***																					
Total	0	0	0	0	0	0	0	0	0	0	1	0	0	0	1	0	0	0	0	0	1
*** BREAK ***																					
05:15 PM	0	0	0	0	0	0	0	0	0	0	2	0	0	0	2	1	0	0	0	1	3
*** BREAK ***																					
Total	0	0	0	0	0	0	0	0	0	0	2	0	0	0	2	1	0	0	0	1	3
06:00 PM	0	0	0	0	0	0	0	0	0	0	1	0	0	0	1	0	0	0	0	0	1
06:15 PM	0	0	0	0	0	0	0	0	0	0	0	0	0	0	0	2	0	0	0	2	2
06:30 PM	0	0	0	0	0	0	0	0	0	0	1	0	0	0	1	0	0	0	0	0	1
06:45 PM	0	0	0	0	0	0	0	0	0	0	1	0	0	0	1	0	0	0	0	0	1
Total	0	0	0	0	0	0	0	0	0	0	3	0	0	0	3	2	0	0	0	2	5
Grand Total	0	0	0	0	0	0	0	0	0	0	8	0	0	0	8	5	0	0	0	5	13
Apprch %	0	0	0	0		0	0	0	0		100	0	0	0		100	0	0	0		
Total %	0	0	0	0	0	0	0	0	0	0	61.5	0	0	0	61.5	38.5	0	0	0	38.5	

Miami Gardens Drive & NW 68th Avenue

File Name : Miami Gardens Drive & NW 68th Avenue
Site Code : 00000000
Start Date : 5/11/2016
Page No : 2

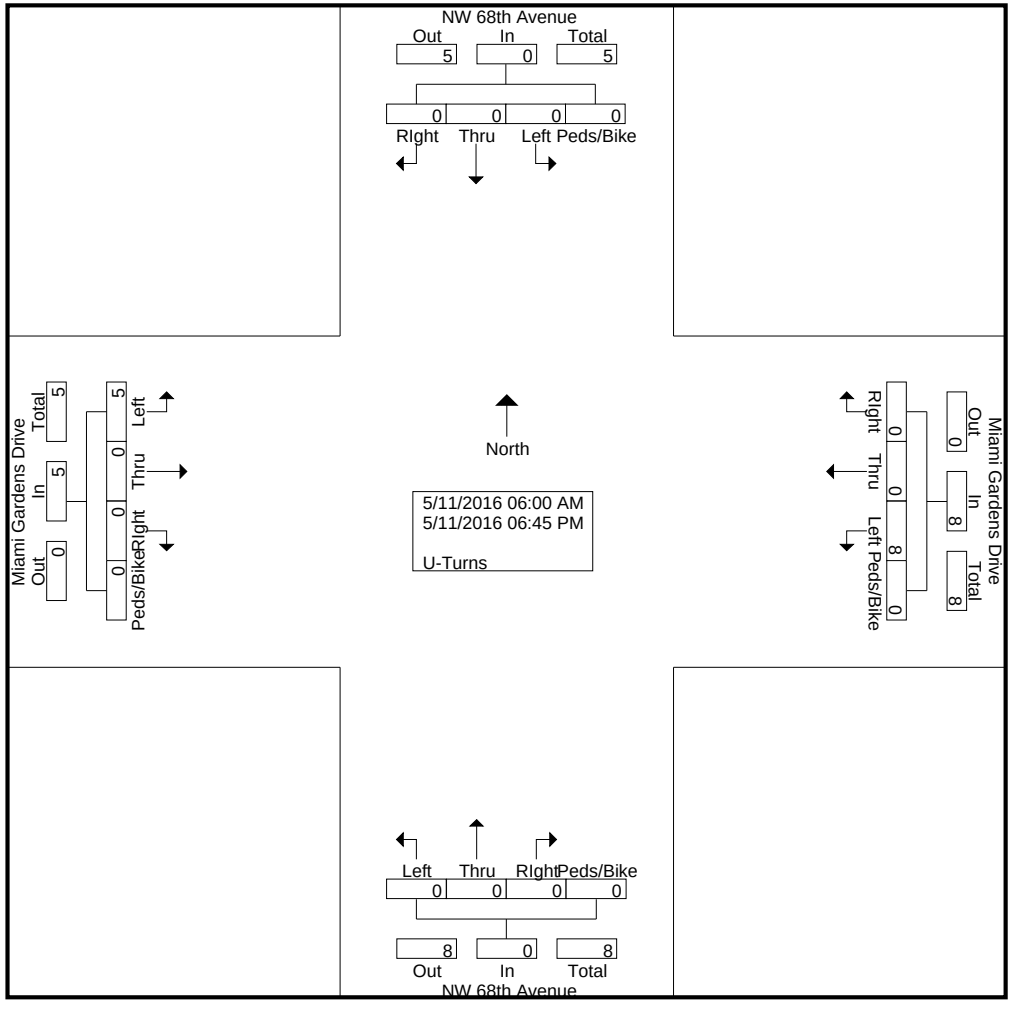

Miami Gardens Drive & NW 68th Avenue

File Name : Miami Gardens Drive & NW 68th Avenue
Site Code : 00000000
Start Date : 5/11/2016

	NW 68th Avenue Southbound					NW 68th Avenue Northbound					Miami Gardens Drive Westbound					Miami Gardens Drive Eastbound					
Start Time	Left	Thru	RIght	Peds/Bike	App. Total	Left	Thru	RIght	Peds/Bike	App. Total	Left	Thru	RIght	Peds/Bike	App. Total	Left	Thru	RIght	Peds/Bike	App. Total	Int. Total
Peak Hour Analysis From 06:00 AM to 08:45 AM - Peak 1 of 1																					
Peak Hour for Entire Intersection Begins at 06:15 AM																					
06:15 AM	0	0	0	0	0	0	0	0	0	0	**1**	0	0	0	**1**	0	0	0	0	0	**1**
06:30 AM	0	0	0	0	0	0	0	0	0	0	0	0	0	0	0	0	0	0	0	0	0
06:45 AM	0	0	0	0	0	0	0	0	0	0	0	0	0	0	0	0	0	0	0	0	0
07:00 AM	0	0	0	0	0	0	0	0	0	0	0	0	0	0	0	**1**	0	0	0	**1**	1
Total Volume	0	0	0	0	0	0	0	0	0	0	1	0	0	0	1	1	0	0	0	1	2
% App. Total	0	0	0	0		0	0	0	0		100	0	0	0		100	0	0	0		
PHF	.000	.000	.000	.000	.000	.000	.000	.000	.000	.000	.250	.000	.000	.000	.250	.250	.000	.000	.000	.250	.500

Miami Gardens Drive & NW 68th Avenue

File Name : Miami Gardens Drive & NW 68th Avenue
Site Code : 00000000
Start Date : 5/11/2016
Page No : 4

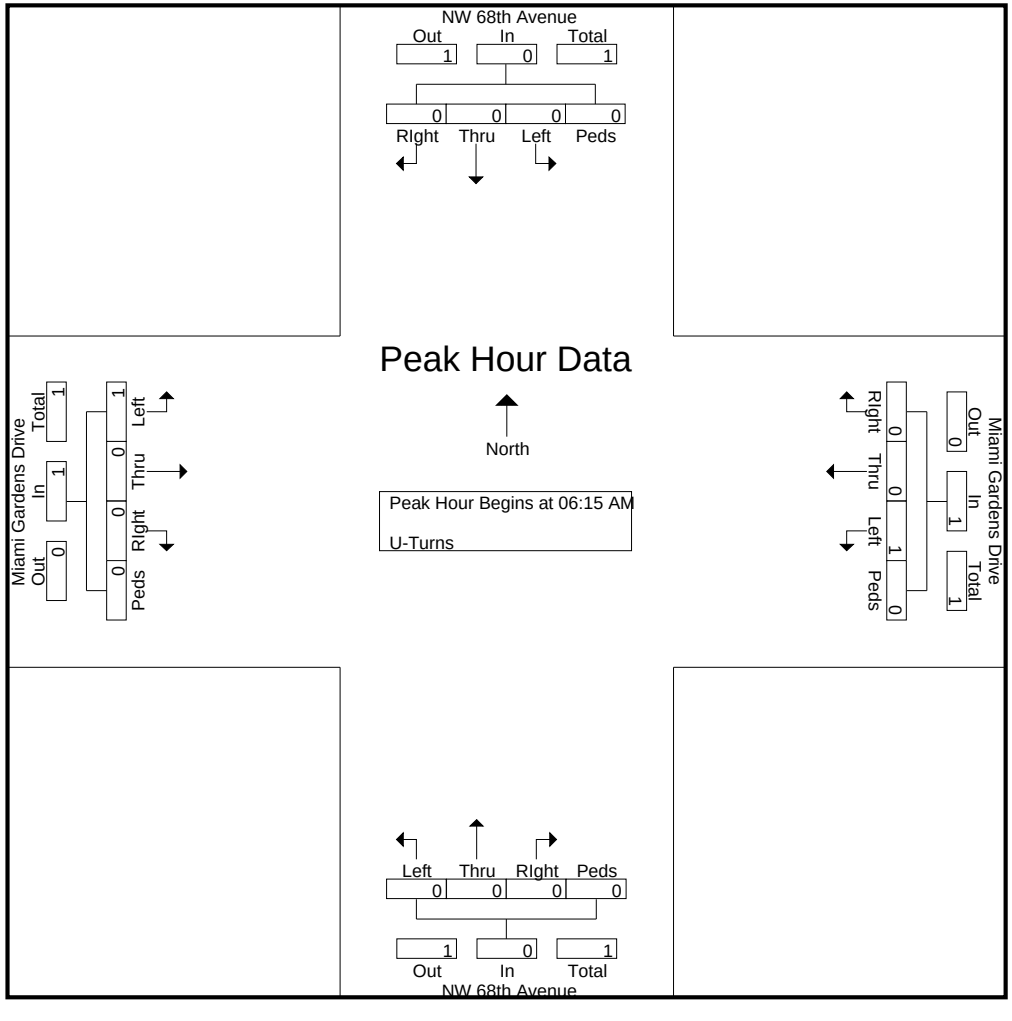

Miami Gardens Drive & NW 68th Avenue

File Name : Miami Gardens Drive & NW 68th Avenue
Site Code : 00000000
Start Date : 5/11/2016
Page No : 5

	NW 68th Avenue Southbound					NW 68th Avenue Northbound					Miami Gardens Drive Westbound					Miami Gardens Drive Eastbound					
Start Time	Left	Thru	RIght	Peds/Bike	App. Total	Left	Thru	RIght	Peds/Bike	App. Total	Left	Thru	RIght	Peds/Bike	App. Total	Left	Thru	RIght	Peds/Bike	App. Total	Int. Total
Peak Hour Analysis From 03:00 PM to 06:45 PM - Peak 1 of 1																					
Peak Hour for Entire Intersection Begins at 06:00 PM																					
06:00 PM	0	0	0	0	0	0	0	0	0	0	**1**	0	0	0	**1**	0	0	0	0	0	1
06:15 PM	0	0	0	0	0	0	0	0	0	0	0	0	0	0	0	**2**	0	0	0	**2**	**2**
06:30 PM	0	0	0	0	0	0	0	0	0	0	1	0	0	0	1	0	0	0	0	0	1
06:45 PM	0	0	0	0	0	0	0	0	0	0	1	0	0	0	1	0	0	0	0	0	1
Total Volume	0	0	0	0	0	0	0	0	0	0	3	0	0	0	3	2	0	0	0	2	5
% App. Total	0	0	0	0		0	0	0	0		100	0	0	0		100	0	0	0		
PHF	.000	.000	.000	.000	.000	.000	.000	.000	.000	.000	.750	.000	.000	.000	.750	.250	.000	.000	.000	.250	.625

Miami Gardens Drive & NW 68th Avenue

File Name : Miami Gardens Drive & NW 68th Avenue
Site Code : 00000000
Start Date : 5/11/2016
Page No : 6

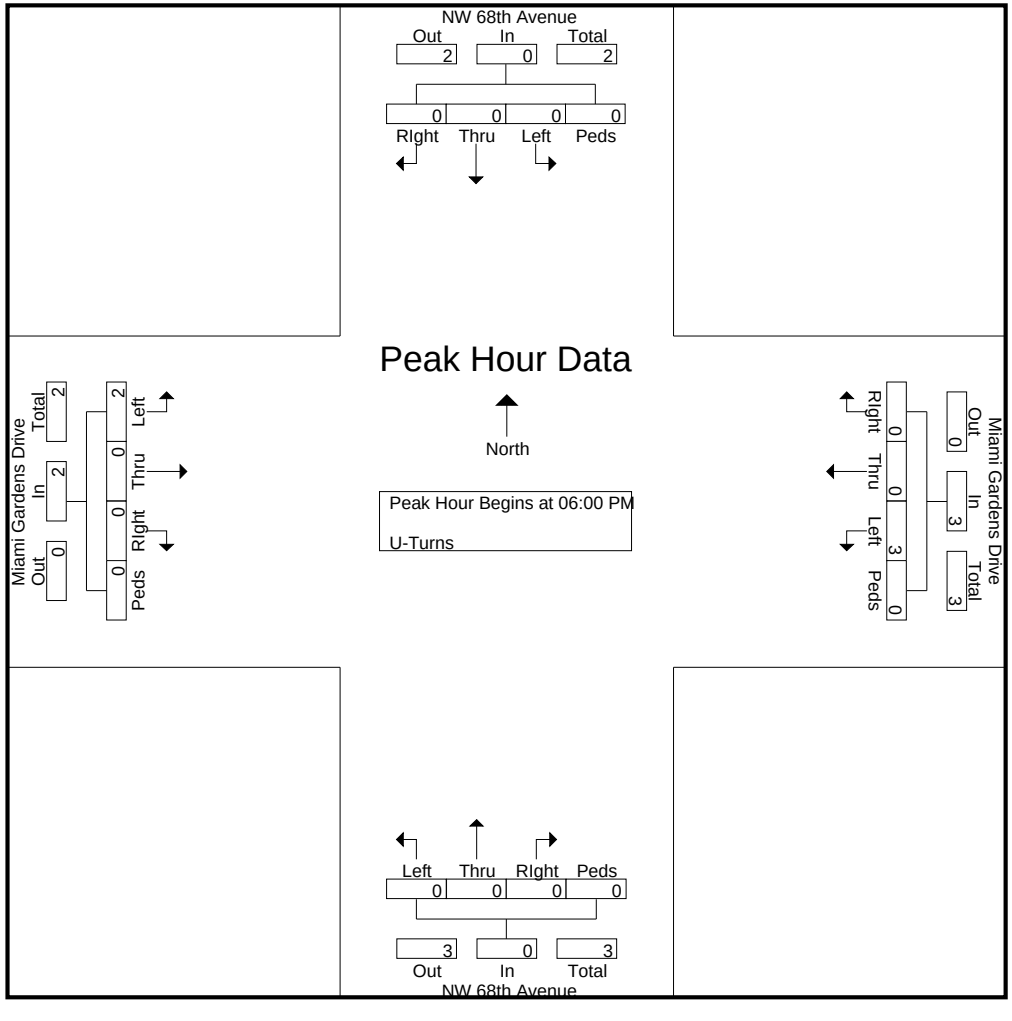

Miami Gardens Drive & NW 68th Avenue

File Name : Miami Gardens Drive & NW 68th Avenue
Site Code : 00000000
Start Date : 5/11/2016
Page No : 1

Groups Printed- Veh - Trucks - Turns

	NW 68th Avenue Southbound					NW 68th Avenue Northbound					Miami Gardens Drive Westbound					Miami Gardens Drive Eastbound					
Start Time	Left	Thru	RIght	Peds/Bike	App. Total	Left	Thru	RIght	Peds/Bike	App. Total	Left	Thru	RIght	Peds/Bike	App. Total	Left	Thru	RIght	Peds/Bike	App. Total	Int. Total
06:00 AM	0	0	0	1	1	15	0	30	0	45	13	89	0	0	102	1	104	28	0	133	281
06:15 AM	3	2	0	0	5	33	3	49	0	85	13	146	5	1	165	2	91	30	1	124	379
06:30 AM	0	0	0	4	4	45	1	66	2	114	15	247	2	0	264	1	190	35	0	226	608
06:45 AM	0	0	0	1	1	59	1	59	0	119	31	313	2	1	347	1	230	49	1	281	748
Total	3	2	0	6	11	152	5	204	2	363	72	795	9	2	878	5	615	142	2	764	2016
07:00 AM	0	2	0	0	2	76	2	71	1	150	43	310	2	3	358	2	227	82	1	312	822
07:15 AM	1	0	1	1	3	81	1	79	0	161	59	295	1	1	356	0	272	34	1	307	827
07:30 AM	0	0	0	5	5	56	1	95	0	152	39	311	3	0	353	1	203	17	0	221	731
07:45 AM	0	0	0	2	2	52	0	97	1	150	28	298	5	1	332	0	204	27	0	231	715
Total	1	2	1	8	12	265	4	342	2	613	169	1214	11	5	1399	3	906	160	2	1071	3095
08:00 AM	4	1	0	0	5	60	2	90	1	153	43	292	2	0	337	2	212	27	0	241	736
08:15 AM	1	0	0	0	1	46	0	71	0	117	45	359	1	0	405	0	222	24	0	246	769
08:30 AM	0	0	1	0	1	33	0	54	0	87	40	311	4	3	358	2	208	27	0	237	683
08:45 AM	2	1	0	0	3	31	3	57	0	91	33	314	2	1	350	1	173	39	0	213	657
Total	7	2	1	0	10	170	5	272	1	448	161	1276	9	4	1450	5	815	117	0	937	2845
*** BREAK ***																					
03:00 PM	2	1	3	0	6	31	0	49	2	82	48	237	2	0	287	0	223	47	0	270	645
03:15 PM	1	0	1	3	5	32	0	42	2	76	56	247	4	2	309	2	240	29	0	271	661
03:30 PM	1	1	2	2	6	38	0	55	0	93	50	282	2	0	334	2	174	45	0	221	654
03:45 PM	0	1	0	2	3	41	1	46	4	92	53	290	2	1	346	3	266	53	0	322	763
Total	4	3	6	7	20	142	1	192	8	343	207	1056	10	3	1276	7	903	174	0	1084	2723
04:00 PM	0	1	2	4	7	34	0	41	1	76	61	234	1	3	299	2	342	43	0	387	769
04:15 PM	0	1	1	5	7	40	0	38	2	80	83	242	2	2	329	3	297	38	0	338	754
04:30 PM	2	0	2	0	4	35	0	44	1	80	64	229	1	0	294	1	230	45	0	276	654
04:45 PM	0	2	1	1	4	34	0	36	0	70	54	241	4	1	300	1	304	52	0	357	731
Total	2	4	6	10	22	143	0	159	4	306	262	946	8	6	1222	7	1173	178	0	1358	2908
05:00 PM	5	0	3	4	12	36	0	49	1	86	63	287	1	0	351	1	287	61	0	349	798
05:15 PM	1	0	2	4	7	48	0	51	2	101	84	321	3	1	409	1	341	50	0	392	909
05:30 PM	2	2	3	2	9	43	0	39	0	82	87	337	3	0	427	1	314	63	0	378	896
05:45 PM	1	0	2	1	4	36	0	64	0	100	107	329	0	0	436	2	307	58	1	368	908
Total	9	2	10	11	32	163	0	203	3	369	341	1274	7	1	1623	5	1249	232	1	1487	3511
06:00 PM	0	3	3	3	9	36	0	65	2	103	73	312	2	0	387	1	350	53	1	405	904
06:15 PM	1	0	3	2	6	53	0	59	3	115	92	317	3	0	412	3	257	80	1	341	874
06:30 PM	0	0	3	3	6	43	2	50	2	97	88	297	1	0	386	0	279	67	0	346	835
06:45 PM	4	2	5	3	14	49	3	67	0	119	87	272	5	0	364	0	221	66	1	288	785
Total	5	5	14	11	35	181	5	241	7	434	340	1198	11	0	1549	4	1107	266	3	1380	3398
Grand Total	31	20	38	53	142	1216	20	1613	27	2876	1552	7759	65	21	9397	36	6768	1269	8	8081	20496
Apprch %	21.8	14.1	26.8	37.3		42.3	0.7	56.1	0.9		16.5	82.6	0.7	0.2		0.4	83.8	15.7	0.1		
Total %	0.2	0.1	0.2	0.3	0.7	5.9	0.1	7.9	0.1	14	7.6	37.9	0.3	0.1	45.8	0.2	33	6.2	0	39.4	

Miami Gardens Drive & NW 68th Avenue

File Name : Miami Gardens Drive & NW 68th Avenue
Site Code : 00000000
Start Date : 5/11/2016
Page No : 2

Groups Printed- Veh - Trucks - Turns

	NW 68th Avenue Southbound					NW 68th Avenue Northbound					Miami Gardens Drive Westbound					Miami Gardens Drive Eastbound					
	Left	Thru	RIght	Peds/Bike	App. Total	Left	Thru	RIght	Peds/Bike	App. Total	Left	Thru	RIght	Peds/Bike	App. Total	Left	Thru	RIght	Peds/Bike	App. Total	Int. Total
Veh	31	19	38	32	120	1180	20	1568	8	2776	1520	7618	65	15	9218	29	6655	1235	3	7922	20036
% Veh	100	95	100	60.4	84.5	97	100	97.2	29.6	96.5	97.9	98.2	100	71.4	98.1	80.6	98.3	97.3	37.5	98	97.8
Trucks	0	1	0	21	22	36	0	45	19	100	24	141	0	6	171	2	113	34	5	154	447
% Trucks	0	5	0	39.6	15.5	3	0	2.8	70.4	3.5	1.5	1.8	0	28.6	1.8	5.6	1.7	2.7	62.5	1.9	2.2
U-Turns	0	0	0	0	0	0	0	0	0	0	8	0	0	0	8	5	0	0	0	5	13
% U-Turns	0	0	0	0	0	0	0	0	0	0	0.5	0	0	0	0.1	13.9	0	0	0	0.1	0.1

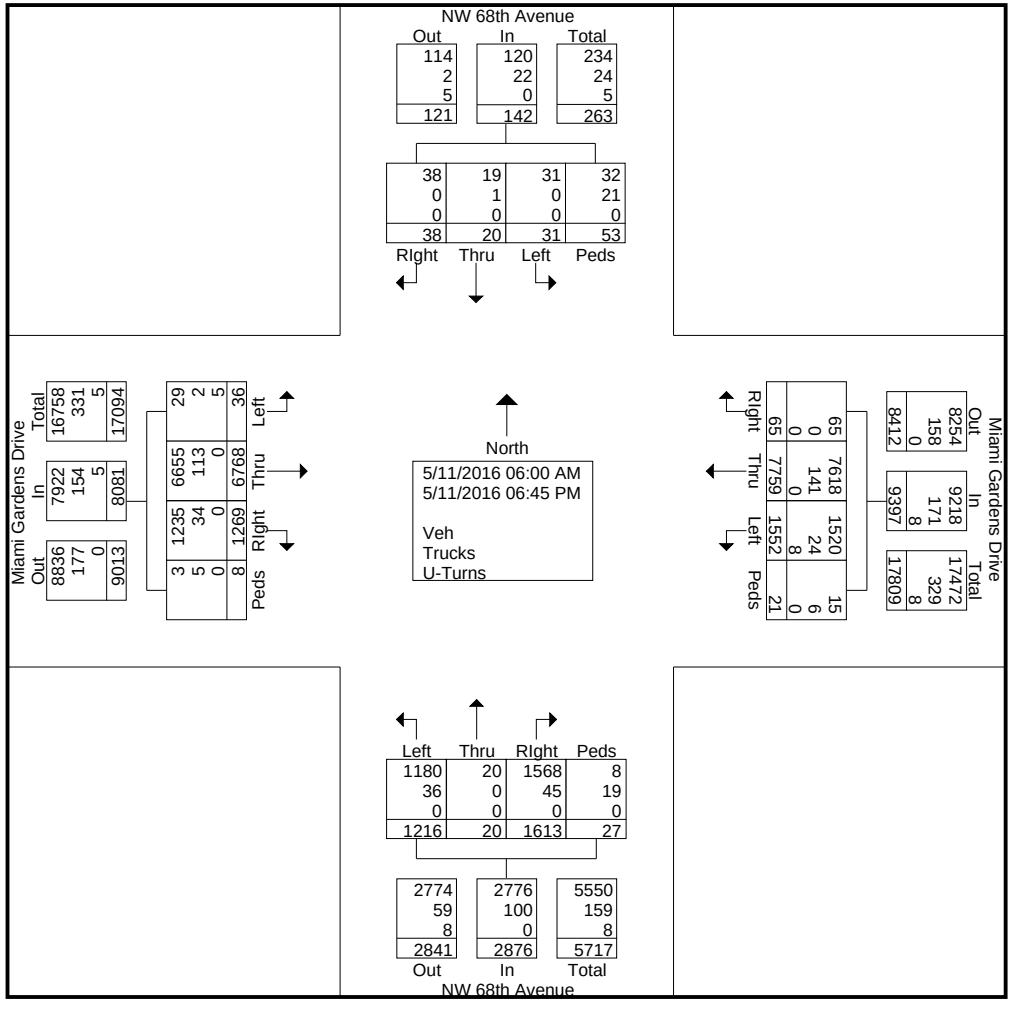

Miami Gardens Drive & NW 68th Avenue

File Name : Miami Gardens Drive & NW 68th Avenue
Site Code : 00000000
Start Date : 5/11/2016
Page No : 3

	NW 68th Avenue Southbound					NW 68th Avenue Northbound					Miami Gardens Drive Westbound					Miami Gardens Drive Eastbound					
Start Time	Left	Thru	RIght	Peds/Bike	App. Total	Left	Thru	RIght	Peds/Bike	App. Total	Left	Thru	RIght	Peds/Bike	App. Total	Left	Thru	RIght	Peds/Bike	App. Total	Int. Total
Peak Hour Analysis From 06:00 AM to 08:45 AM - Peak 1 of 1																					
Peak Hour for Entire Intersection Begins at 06:45 AM																					
06:45 AM	0	0	0	1	1	59	1	59	0	119	31	**313**	2	1	347	1	230	49	**1**	281	748
07:00 AM	0	**2**	0	0	2	76	**2**	71	**1**	150	43	310	2	**3**	**358**	**2**	227	**82**	1	**312**	822
07:15 AM	**1**	0	**1**	1	3	**81**	1	79	0	**161**	**59**	295	1	1	356	0	**272**	34	1	307	**827**
07:30 AM	0	0	0	**5**	**5**	56	1	**95**	0	152	39	311	**3**	0	353	1	203	17	0	221	731
Total Volume	1	2	1	7	11	272	5	304	1	582	172	1229	8	5	1414	4	932	182	3	1121	3128
% App. Total	9.1	18.2	9.1	63.6		46.7	0.9	52.2	0.2		12.2	86.9	0.6	0.4		0.4	83.1	16.2	0.3		
PHF	.250	.250	.250	.350	.550	.840	.625	.800	.250	.904	.729	.982	.667	.417	.987	.500	.857	.555	.750	.898	.946

Miami Gardens Drive & NW 68th Avenue

File Name : Miami Gardens Drive & NW 68th Avenue
Site Code : 00000000
Start Date : 5/11/2016
Page No : 4

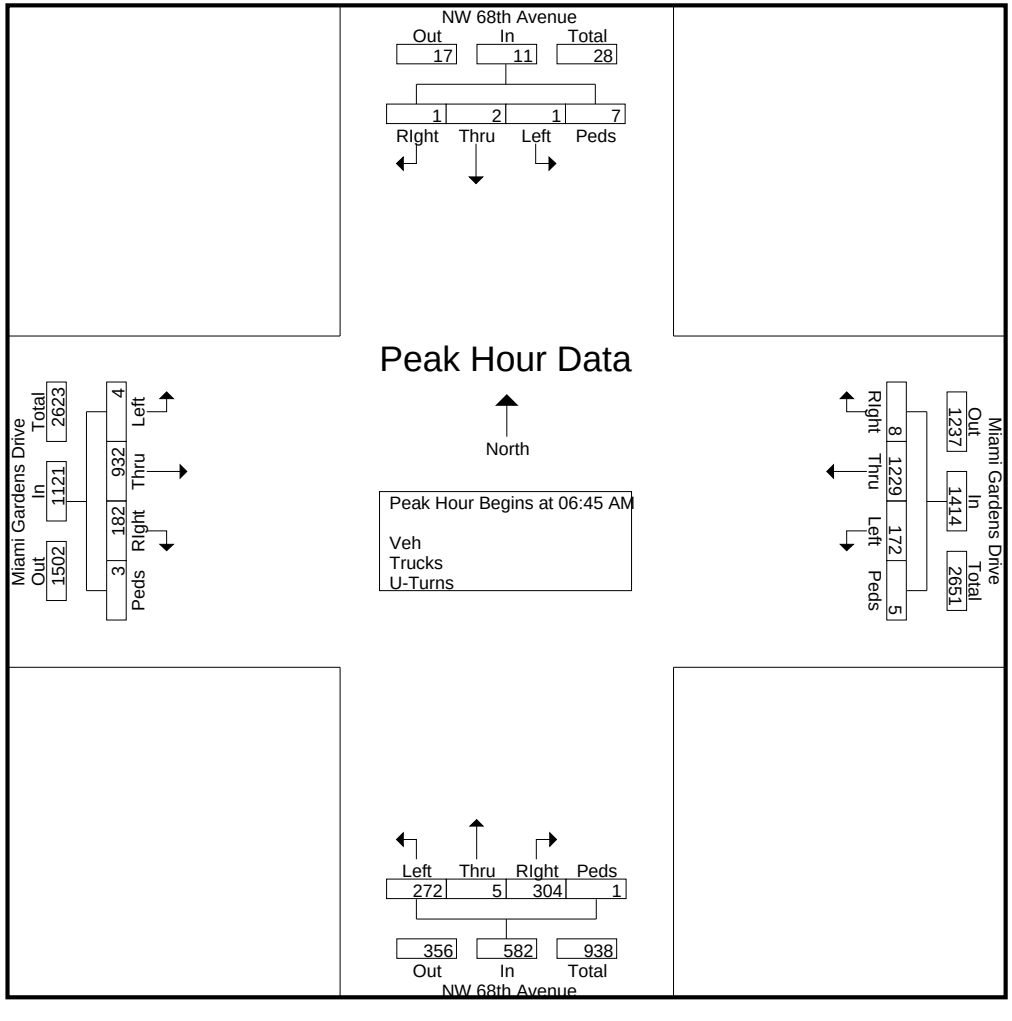

Miami Gardens Drive & NW 68th Avenue

File Name : Miami Gardens Drive & NW 68th Avenue
Site Code : 00000000
Start Date : 5/11/2016
Page No : 5

	NW 68th Avenue Southbound					NW 68th Avenue Northbound					Miami Gardens Drive Westbound					Miami Gardens Drive Eastbound					
Start Time	Left	Thru	RIght	Peds/Bike	App. Total	Left	Thru	RIght	Peds/Bike	App. Total	Left	Thru	RIght	Peds/Bike	App. Total	Left	Thru	RIght	Peds/Bike	App. Total	Int. Total
Peak Hour Analysis From 03:00 PM to 06:45 PM - Peak 1 of 1																					
Peak Hour for Entire Intersection Begins at 05:15 PM																					
05:15 PM	1	0	2	**4**	7	**48**	0	51	**2**	101	84	321	**3**	**1**	409	1	341	50	0	392	**909**
05:30 PM	**2**	2	**3**	2	**9**	43	0	39	0	82	87	**337**	3	0	427	1	314	**63**	0	378	896
05:45 PM	1	0	2	1	4	36	0	64	0	100	**107**	329	0	0	**436**	**2**	307	58	**1**	368	908
06:00 PM	0	**3**	3	3	9	36	0	**65**	2	**103**	73	312	2	0	387	1	**350**	53	1	**405**	904
Total Volume	4	5	10	10	29	163	0	219	4	386	351	1299	8	1	1659	5	1312	224	2	1543	3617
% App. Total	13.8	17.2	34.5	34.5		42.2	0	56.7	1		21.2	78.3	0.5	0.1		0.3	85	14.5	0.1		
PHF	.500	.417	.833	.625	.806	.849	.000	.842	.500	.937	.820	.964	.667	.250	.951	.625	.937	.889	.500	.952	.995

Miami Gardens Drive & NW 68th Avenue

File Name : Miami Gardens Drive & NW 68th Avenue
Site Code : 00000000
Start Date : 5/11/2016
Page No : 6

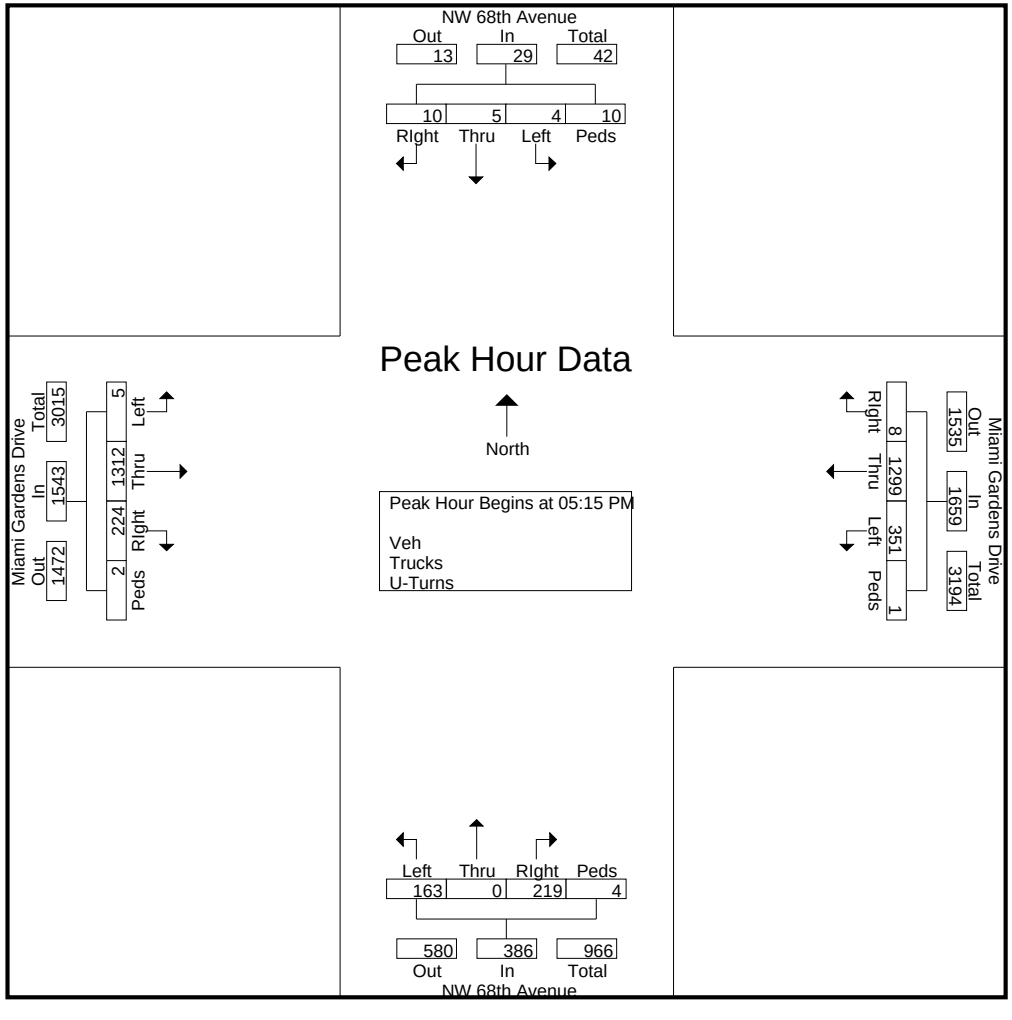

Miami Gardens Drive & Bob-O-Link Drive

File Name : Miami Gardens Drive & Bob-O-Link Drive
Site Code : 00000000
Start Date : 5/11/2016
Page No : 1

Groups Printed- Trucks

	Boblink RD Southbound					Boblink RD Northbound					Miami Gardens Drive Westbound					Miami Gardens Drive Eastbound					
Start Time	Left	Thru	RIght	Bikes	App. Total	Left	Thru	RIght	Bikes	App. Total	Left	Thru	RIght	Bikes	App. Total	Left	Thru	RIght	Bikes	App. Total	Int. Total
06:00 AM	0	0	1	0	1	0	0	0	0	0	0	6	0	0	6	0	6	0	0	6	13
06:15 AM	1	0	0	0	1	0	0	0	0	0	0	15	1	0	16	1	7	0	0	8	25
06:30 AM	1	0	1	0	2	0	0	0	0	0	0	7	2	1	10	0	9	0	0	9	21
06:45 AM	0	0	1	1	2	0	0	0	1	1	0	6	1	0	7	0	9	0	0	9	19
Total	2	0	3	1	6	0	0	0	1	1	0	34	4	1	39	1	31	0	0	32	78
07:00 AM	0	0	1	1	2	0	0	0	0	0	0	6	0	0	6	1	7	0	0	8	16
07:15 AM	1	0	0	3	4	0	0	0	0	0	0	9	2	0	11	1	5	0	0	6	21
07:30 AM	3	0	0	6	9	0	0	0	0	0	0	7	2	0	9	1	4	0	0	5	23
07:45 AM	0	0	0	1	1	0	0	0	0	0	0	6	2	0	8	1	4	0	0	5	14
Total	4	0	1	11	16	0	0	0	0	0	0	28	6	0	34	4	20	0	0	24	74
08:00 AM	1	0	0	0	1	0	0	0	0	0	0	4	0	0	4	0	6	0	0	6	11
08:15 AM	1	0	1	0	2	0	0	0	0	0	0	7	1	1	9	1	9	0	0	10	21
08:30 AM	0	0	0	1	1	0	0	0	0	0	0	8	0	0	8	0	3	0	0	3	12
08:45 AM	0	0	1	0	1	0	0	0	0	0	0	6	1	0	7	0	8	0	0	8	16
Total	2	0	2	1	5	0	0	0	0	0	0	25	2	1	28	1	26	0	0	27	60
*** BREAK ***																					
03:00 PM	3	0	0	0	3	0	0	0	0	0	0	4	1	0	5	3	13	0	0	16	24
03:15 PM	0	0	1	1	2	0	0	0	1	1	0	9	2	0	11	0	6	0	1	7	21
03:30 PM	0	0	0	1	1	0	0	0	0	0	0	11	0	0	11	0	0	0	0	0	12
03:45 PM	1	0	0	3	4	0	0	0	0	0	0	2	1	0	3	1	4	0	0	5	12
Total	4	0	1	5	10	0	0	0	1	1	0	26	4	0	30	4	23	0	1	28	69
04:00 PM	2	0	1	4	7	0	0	0	0	0	0	4	2	0	6	1	14	0	0	15	28
04:15 PM	6	0	0	3	9	0	0	0	0	0	0	7	3	0	10	1	11	0	0	12	31
04:30 PM	3	0	0	1	4	0	0	0	0	0	0	4	0	1	5	1	3	0	0	4	13
04:45 PM	0	0	1	1	2	0	0	0	0	0	0	4	0	1	5	1	5	0	0	6	13
Total	11	0	2	9	22	0	0	0	0	0	0	19	5	2	26	4	33	0	0	37	85
05:00 PM	0	0	0	0	0	0	0	0	0	0	0	5	1	0	6	0	3	0	0	3	9
05:15 PM	0	0	1	0	1	0	0	0	0	0	0	1	0	0	1	0	2	0	0	2	4
05:30 PM	0	0	0	0	0	0	0	0	0	0	0	3	0	0	3	0	3	0	0	3	6
05:45 PM	0	0	0	0	0	0	0	0	0	0	0	6	0	0	6	0	2	0	0	2	8
Total	0	0	1	0	1	0	0	0	0	0	0	15	1	0	16	0	10	0	0	10	27
06:00 PM	0	0	0	2	2	0	0	0	0	0	0	3	0	0	3	0	2	0	0	2	7
06:15 PM	0	0	0	0	0	0	0	0	3	3	0	1	0	1	2	0	2	0	0	2	7
06:30 PM	0	0	0	2	2	0	0	0	3	3	0	1	0	0	1	0	3	0	2	5	11
06:45 PM	0	0	0	2	2	0	0	0	0	0	0	5	0	1	6	0	4	0	0	4	12
Total	0	0	0	6	6	0	0	0	6	6	0	10	0	2	12	0	11	0	2	13	37
Grand Total	23	0	10	33	66	0	0	0	8	8	0	157	22	6	185	14	154	0	3	171	430
Apprch %	34.8	0	15.2	50		0	0	0	100		0	84.9	11.9	3.2		8.2	90.1	0	1.8		
Total %	5.3	0	2.3	7.7	15.3	0	0	0	1.9	1.9	0	36.5	5.1	1.4	43	3.3	35.8	0	0.7	39.8	

Miami Gardens Drive & Bob-O-Link Drive

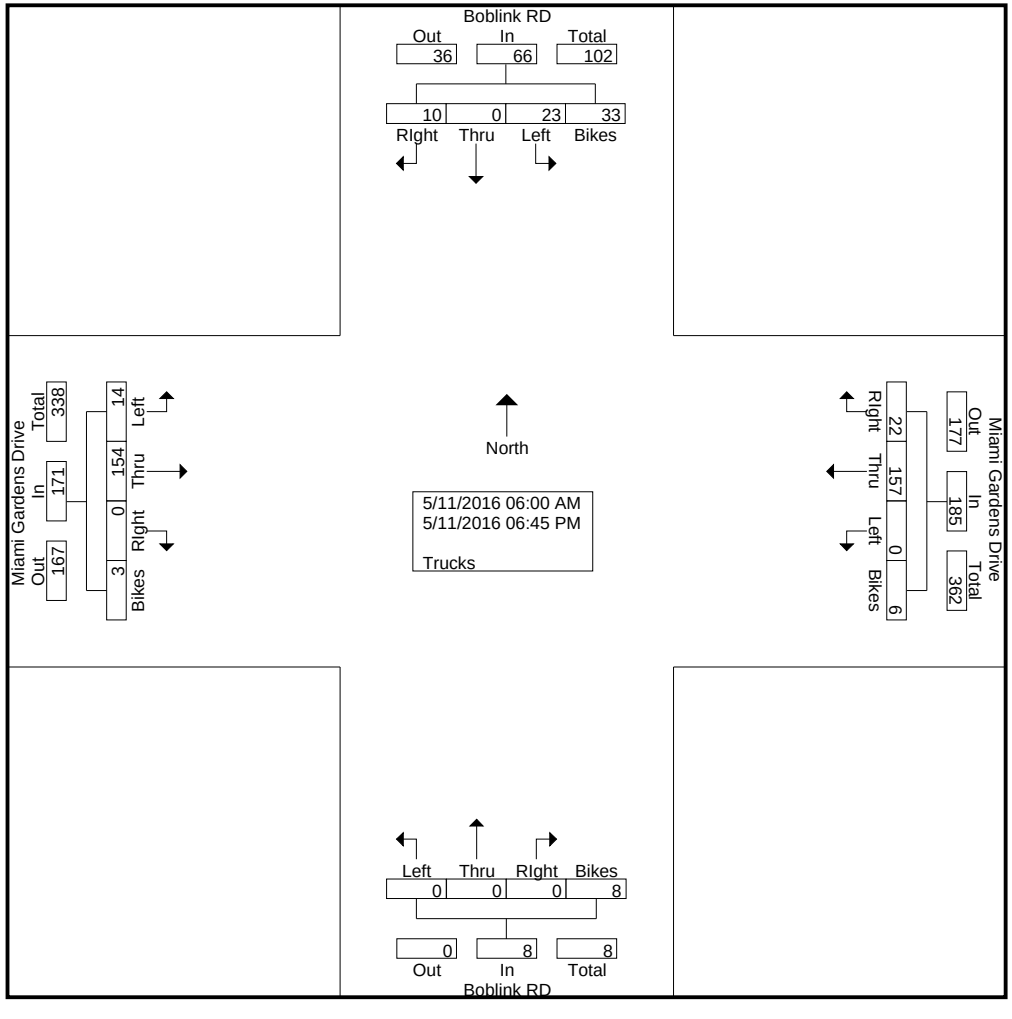

Miami Gardens Drive & Bob-O-Link Drive

File Name : Miami Gardens Drive & Bob-O-Link Drive
Site Code : 00000000
Start Date : 5/11/2016
Page No : 3

	Boblink RD Southbound					Boblink RD Northbound					Miami Gardens Drive Westbound					Miami Gardens Drive Eastbound					
Start Time	Left	Thru	RIght	Bikes	App. Total	Left	Thru	RIght	Bikes	App. Total	Left	Thru	RIght	Bikes	App. Total	Left	Thru	RIght	Bikes	App. Total	Int. Total
Peak Hour Analysis From 06:00 AM to 08:45 AM - Peak 1 of 1																					
Peak Hour for Entire Intersection Begins at 06:15 AM																					
06:15 AM	**1**	0	0	0	1	0	0	0	0	0	0	**15**	1	0	**16**	**1**	7	0	0	8	**25**
06:30 AM	1	0	**1**	0	**2**	0	0	0	0	0	0	7	**2**	**1**	10	0	**9**	0	0	**9**	21
06:45 AM	0	0	1	**1**	2	0	0	0	**1**	**1**	0	6	1	0	7	0	9	0	0	9	19
07:00 AM	0	0	1	1	2	0	0	0	0	0	0	6	0	0	6	1	7	0	0	8	16
Total Volume	2	0	3	2	7	0	0	0	1	1	0	34	4	1	39	2	32	0	0	34	81
% App. Total	28.6	0	42.9	28.6		0	0	0	100		0	87.2	10.3	2.6		5.9	94.1	0	0		
PHF	.500	.000	.750	.500	.875	.000	.000	.000	.250	.250	.000	.567	.500	.250	.609	.500	.889	.000	.000	.944	.810

Miami Gardens Drive & Bob-O-Link Drive

File Name : Miami Gardens Drive & Bob-O-Link Drive
Site Code : 00000000
Start Date : 5/11/2016
Page No : 4

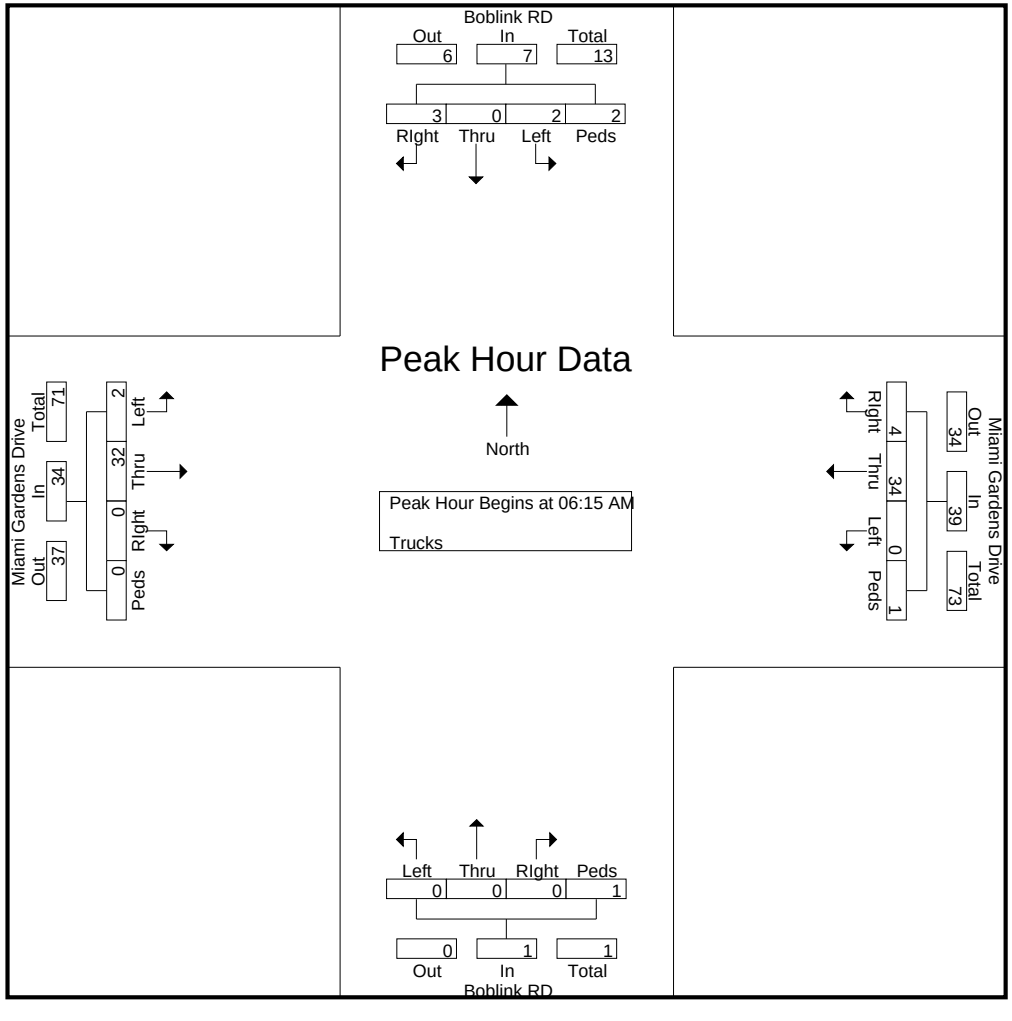

Miami Gardens Drive & Bob-O-Link Drive

File Name : Miami Gardens Drive & Bob-O-Link Drive
Site Code : 00000000
Start Date : 5/11/2016
Page No : 5

	Boblink RD Southbound					Boblink RD Northbound					Miami Gardens Drive Westbound					Miami Gardens Drive Eastbound					
Start Time	Left	Thru	RIght	Bikes	App. Total	Left	Thru	RIght	Bikes	App. Total	Left	Thru	RIght	Bikes	App. Total	Left	Thru	RIght	Bikes	App. Total	Int. Total
Peak Hour Analysis From 03:00 PM to 06:45 PM - Peak 1 of 1																					
Peak Hour for Entire Intersection Begins at 04:00 PM																					
04:00 PM	2	0	**1**	**4**	7	0	0	0	0	0	0	4	2	0	6	**1**	**14**	0	0	**15**	28
04:15 PM	**6**	0	0	3	**9**	0	0	0	0	0	0	**7**	**3**	0	**10**	1	11	0	0	12	**31**
04:30 PM	3	0	0	1	4	0	0	0	0	0	0	4	0	**1**	5	1	3	0	0	4	13
04:45 PM	0	0	1	1	2	0	0	0	0	0	0	4	0	1	5	1	5	0	0	6	13
Total Volume	11	0	2	9	22	0	0	0	0	0	0	19	5	2	26	4	33	0	0	37	85
% App. Total	50	0	9.1	40.9		0	0	0	0		0	73.1	19.2	7.7		10.8	89.2	0	0		
PHF	.458	.000	.500	.563	.611	.000	.000	.000	.000	.000	.000	.679	.417	.500	.650	1.00	.589	.000	.000	.617	.685

Miami Gardens Drive & Bob-O-Link Drive

File Name : Miami Gardens Drive & Bob-O-Link Drive
Site Code : 00000000
Start Date : 5/11/2016
Page No : 6

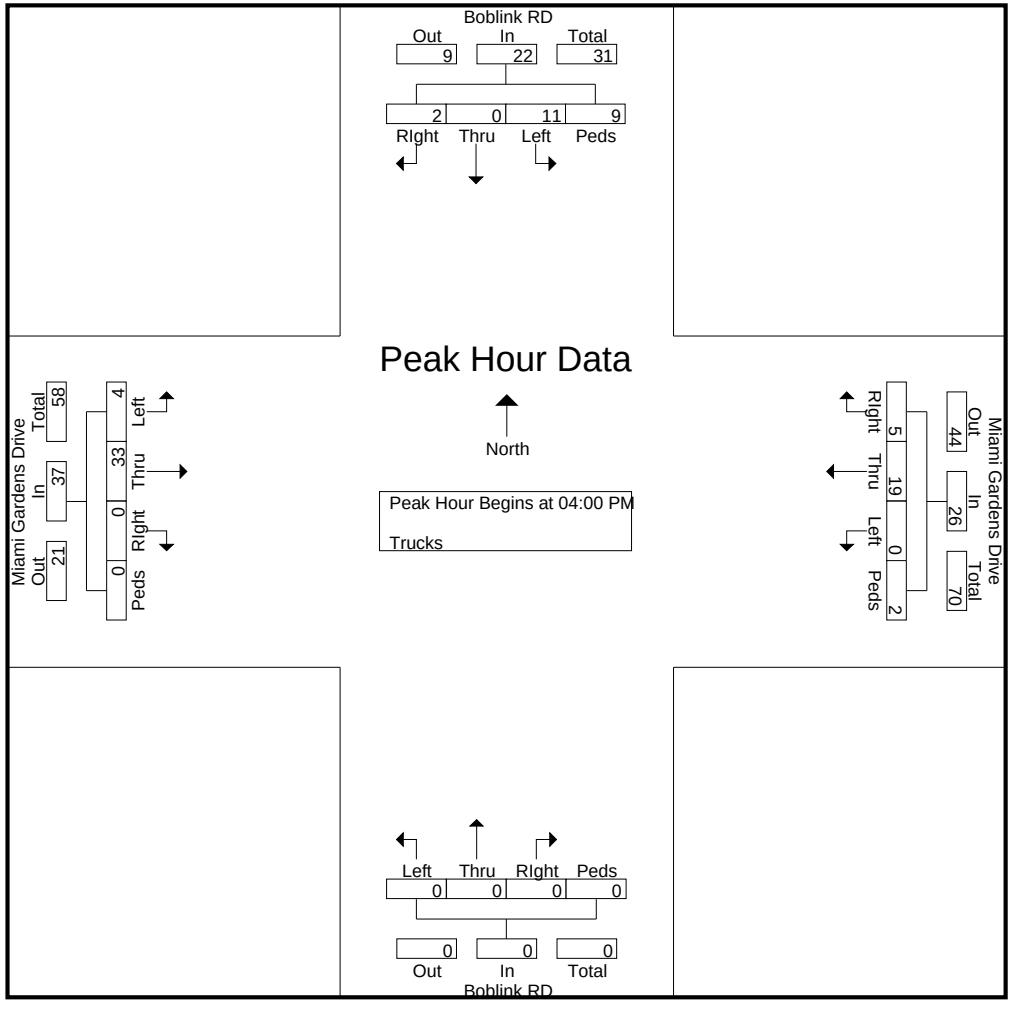

Miami Gardens Drive & Bob-O-Link Drive

File Name : Miami Gardens Drive & Bob-O-Link Drive
Site Code : 00000000
Start Date : 5/11/2016
Page No : 1

Groups Printed- Turns

	Boblink RD Southbound					Boblink RD Northbound					Miami Gardens Drive Westbound					Miami Gardens Drive Eastbound					
Start Time	Left	Thru	RIght	Peds/Bike	App. Total	Left	Thru	RIght	Peds/Bike	App. Total	Left	Thru	RIght	Peds/Bike	App. Total	Left	Thru	RIght	Peds/Bike	App. Total	Int. Total
06:00 AM	0	0	0	0	0	0	0	0	0	0	2	0	0	0	2	0	0	0	0	0	2
06:15 AM	0	0	0	0	0	0	0	0	0	0	2	0	0	0	2	0	0	0	0	0	2
06:30 AM	0	0	0	0	0	0	0	0	0	0	4	0	0	0	4	2	0	0	0	2	6
06:45 AM	0	0	0	0	0	0	0	0	0	0	5	0	0	0	5	1	0	0	0	1	6
Total	0	0	0	0	0	0	0	0	0	0	13	0	0	0	13	3	0	0	0	3	16
07:00 AM	0	0	0	0	0	0	0	0	0	0	3	0	0	0	3	1	0	0	0	1	4
07:15 AM	0	0	0	0	0	0	0	0	0	0	5	0	0	0	5	0	0	0	0	0	5
07:30 AM	0	0	0	0	0	0	0	0	0	0	3	0	0	0	3	0	0	0	0	0	3
07:45 AM	0	0	0	0	0	0	0	0	0	0	4	0	0	0	4	0	0	0	0	0	4
Total	0	0	0	0	0	0	0	0	0	0	15	0	0	0	15	1	0	0	0	1	16
08:00 AM	0	0	0	0	0	0	0	0	0	0	8	0	0	0	8	0	0	0	0	0	8
08:15 AM	0	0	0	0	0	0	0	0	0	0	11	0	0	0	11	2	0	0	0	2	13
08:30 AM	0	0	0	0	0	0	0	0	0	0	2	0	0	0	2	0	0	0	0	0	2
08:45 AM	0	0	0	0	0	0	0	0	0	0	9	0	0	0	9	0	0	0	0	0	9
Total	0	0	0	0	0	0	0	0	0	0	30	0	0	0	30	2	0	0	0	2	32
*** BREAK ***																					
03:00 PM	0	0	0	0	0	0	0	0	0	0	9	1	0	0	10	1	0	0	0	1	11
03:15 PM	0	0	0	0	0	0	0	0	0	0	14	0	0	0	14	0	0	0	0	0	14
03:30 PM	0	0	0	0	0	0	0	0	0	0	11	0	0	0	11	0	0	0	0	0	11
03:45 PM	0	0	0	0	0	0	0	0	0	0	5	0	0	0	5	0	0	0	0	0	5
Total	0	0	0	0	0	0	0	0	0	0	39	1	0	0	40	1	0	0	0	1	41
04:00 PM	0	0	0	0	0	0	0	0	0	0	9	0	0	0	9	0	0	0	0	0	9
04:15 PM	0	0	0	0	0	0	0	0	0	0	7	0	0	0	7	0	0	0	0	0	7
04:30 PM	0	0	0	0	0	0	0	0	0	0	9	0	0	0	9	1	0	0	0	1	10
04:45 PM	0	0	0	0	0	0	0	0	0	0	8	0	0	0	8	0	0	0	0	0	8
Total	0	0	0	0	0	0	0	0	0	0	33	0	0	0	33	1	0	0	0	1	34
05:00 PM	0	0	0	0	0	0	0	0	0	0	17	0	0	0	17	0	0	0	0	0	17
05:15 PM	0	0	0	0	0	0	0	0	0	0	13	0	0	0	13	0	0	0	0	0	13
05:30 PM	0	0	0	0	0	0	0	0	0	0	6	0	0	0	6	2	0	0	0	2	8
05:45 PM	0	0	0	0	0	0	0	0	0	0	10	0	0	0	10	1	0	0	0	1	11
Total	0	0	0	0	0	0	0	0	0	0	46	0	0	0	46	3	0	0	0	3	49
06:00 PM	0	0	0	0	0	0	0	0	0	0	14	0	0	0	14	0	0	0	0	0	14
06:15 PM	0	0	0	1	1	0	0	0	0	0	12	0	0	0	12	0	0	0	0	0	13
06:30 PM	0	0	0	0	0	0	0	0	0	0	15	0	0	0	15	0	0	0	0	0	15
06:45 PM	0	0	0	0	0	0	0	0	0	0	8	0	0	0	8	0	0	0	0	0	8
Total	0	0	0	1	1	0	0	0	0	0	49	0	0	0	49	0	0	0	0	0	50
Grand Total	0	0	0	1	1	0	0	0	0	0	225	1	0	0	226	11	0	0	0	11	238
Apprch %	0	0	0	100		0	0	0	0		99.6	0.4	0	0		100	0	0	0		
Total %	0	0	0	0.4	0.4	0	0	0	0	0	94.5	0.4	0	0	95	4.6	0	0	0	4.6	

Miami Gardens Drive & Bob-O-Link Drive

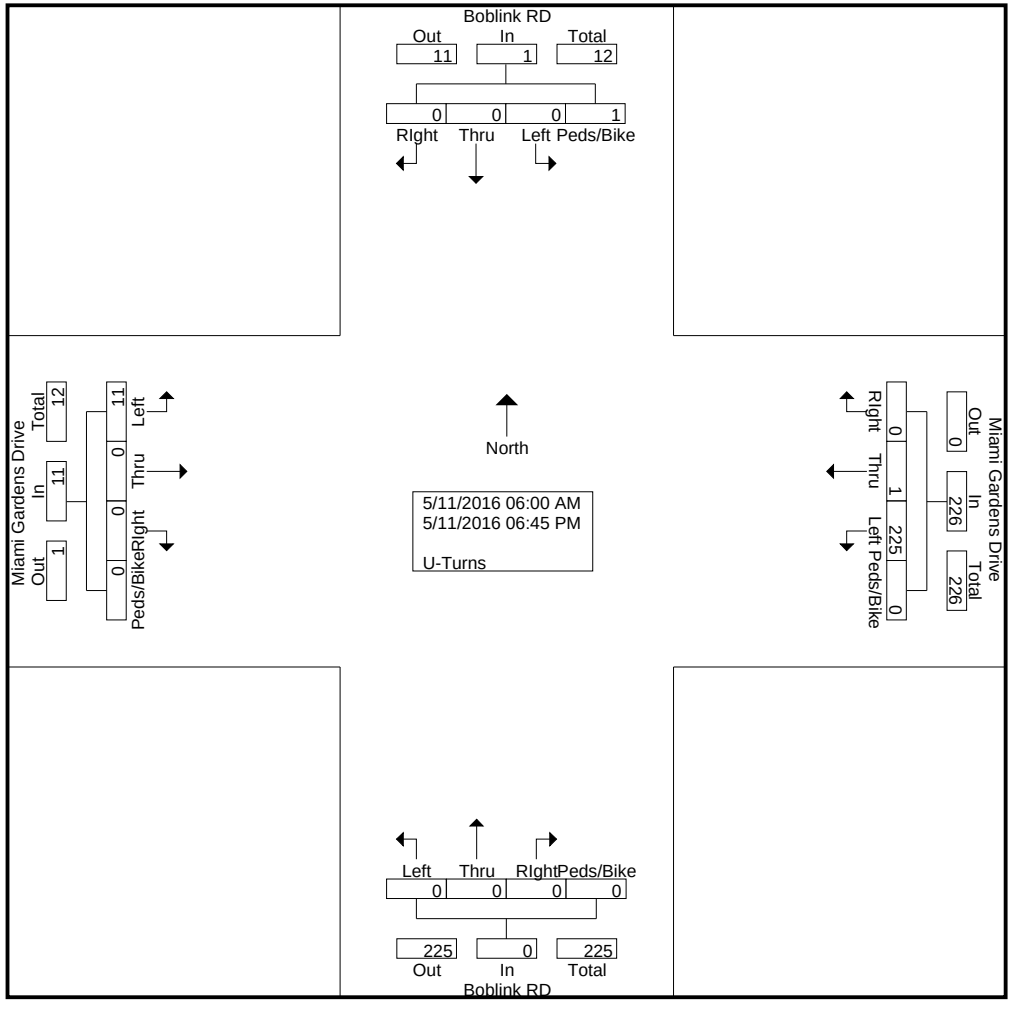

Miami Gardens Drive & Bob-O-Link Drive

File Name : Miami Gardens Drive & Bob-O-Link Drive
Site Code : 00000000
Start Date : 5/11/2016
Page No : 3

	Boblink RD Southbound					Boblink RD Northbound					Miami Gardens Drive Westbound					Miami Gardens Drive Eastbound					
Start Time	Left	Thru	RIght	Peds/Bike	App. Total	Left	Thru	RIght	Peds/Bike	App. Total	Left	Thru	RIght	Peds/Bike	App. Total	Left	Thru	RIght	Peds/Bike	App. Total	Int. Total
Peak Hour Analysis From 06:00 AM to 08:45 AM - Peak 1 of 1																					
Peak Hour for Entire Intersection Begins at 08:00 AM																					
08:00 AM	0	0	0	0	0	0	0	0	0	0	8	0	0	0	8	0	0	0	0	0	8
08:15 AM	0	0	0	0	0	0	0	0	0	0	**11**	0	0	0	**11**	**2**	0	0	0	**2**	**13**
08:30 AM	0	0	0	0	0	0	0	0	0	0	2	0	0	0	2	0	0	0	0	0	2
08:45 AM	0	0	0	0	0	0	0	0	0	0	9	0	0	0	9	0	0	0	0	0	9
Total Volume	0	0	0	0	0	0	0	0	0	0	30	0	0	0	30	2	0	0	0	2	32
% App. Total	0	0	0	0		0	0	0	0		100	0	0	0		100	0	0	0		
PHF	.000	.000	.000	.000	.000	.000	.000	.000	.000	.000	.682	.000	.000	.000	.682	.250	.000	.000	.000	.250	.615

Miami Gardens Drive & Bob-O-Link Drive

File Name : Miami Gardens Drive & Bob-O-Link Drive
Site Code : 00000000
Start Date : 5/11/2016
Page No : 4

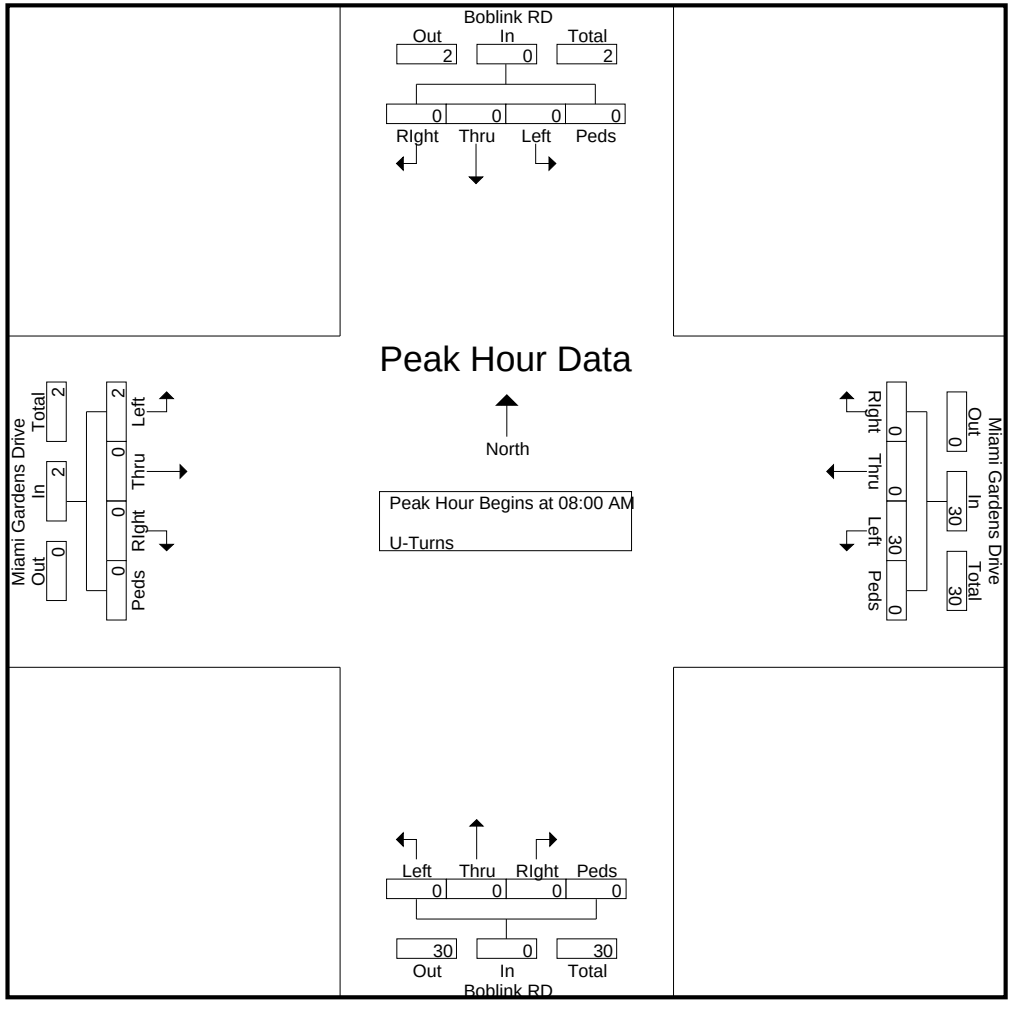

Miami Gardens Drive & Bob-O-Link Drive

File Name : Miami Gardens Drive & Bob-O-Link Drive
Site Code : 00000000
Start Date : 5/11/2016
Page No : 5

	Boblink RD Southbound					Boblink RD Northbound					Miami Gardens Drive Westbound					Miami Gardens Drive Eastbound					
Start Time	Left	Thru	RIght	Peds/Bike	App. Total	Left	Thru	RIght	Peds/Bike	App. Total	Left	Thru	RIght	Peds/Bike	App. Total	Left	Thru	RIght	Peds/Bike	App. Total	Int. Total
Peak Hour Analysis From 03:00 PM to 06:45 PM - Peak 1 of 1																					
Peak Hour for Entire Intersection Begins at 05:45 PM																					
05:45 PM	0	0	0	0	0	0	0	0	0	0	10	0	0	0	10	**1**	0	0	0	**1**	11
06:00 PM	0	0	0	0	0	0	0	0	0	0	14	0	0	0	14	0	0	0	0	0	14
06:15 PM	0	0	0	**1**	**1**	0	0	0	0	0	12	0	0	0	12	0	0	0	0	0	13
06:30 PM	0	0	0	0	0	0	0	0	0	0	**15**	0	0	0	**15**	0	0	0	0	0	**15**
Total Volume	0	0	0	1	1	0	0	0	0	0	51	0	0	0	51	1	0	0	0	1	53
% App. Total	0	0	0	100		0	0	0	0		100	0	0	0		100	0	0	0		
PHF	.000	.000	.000	.250	.250	.000	.000	.000	.000	.000	.850	.000	.000	.000	.850	.250	.000	.000	.000	.250	.883

Miami Gardens Drive & Bob-O-Link Drive

File Name : Miami Gardens Drive & Bob-O-Link Drive
Site Code : 00000000
Start Date : 5/11/2016
Page No : 6

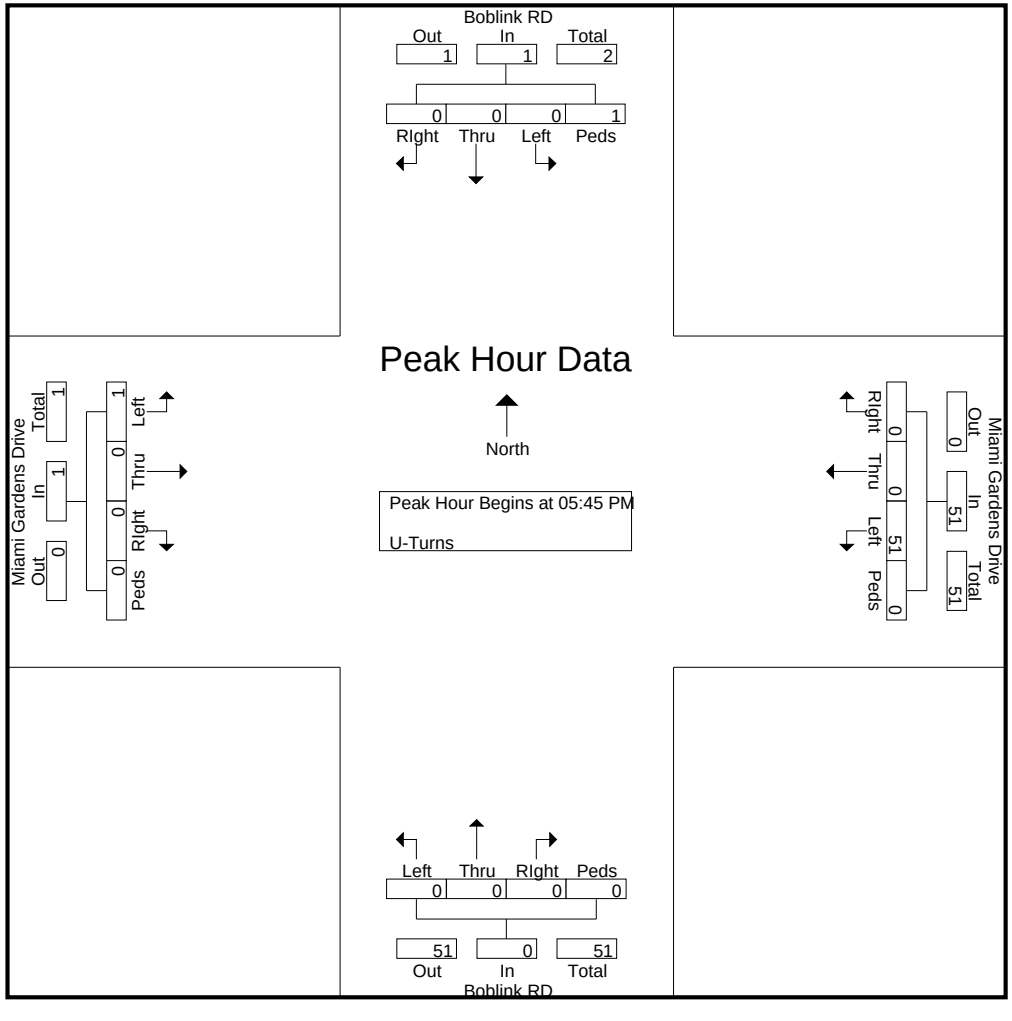

Miami Gardens Drive & Bob-O-Link Drive

File Name : Miami Gardens Drive & Bob-O-Link Drive
Site Code : 00000000
Start Date : 5/11/2016
Page No : 1

Groups Printed- Veh - Trucks - Turns

	Boblink RD Southbound					Boblink RD Northbound					Miami Gardens Drive Westbound					Miami Gardens Drive Eastbound					
Start Time	Left	Thru	RIght	Peds/Bike	App. Total	Left	Thru	RIght	Peds/Bike	App. Total	Left	Thru	RIght	Peds/Bike	App. Total	Left	Thru	RIght	Peds/Bike	App. Total	Int. Total
06:00 AM	18	0	9	1	28	0	0	7	0	7	3	103	6	0	112	0	148	0	0	148	295
06:15 AM	24	0	9	4	37	0	1	35	0	36	3	170	7	1	181	4	157	0	0	161	415
06:30 AM	40	0	16	3	59	1	0	25	0	26	4	263	9	1	277	3	270	0	2	275	637
06:45 AM	49	0	16	2	67	0	0	31	8	39	5	344	7	0	356	8	280	0	0	288	750
Total	131	0	50	10	191	1	1	98	8	108	15	880	29	2	926	15	855	0	2	872	2097
07:00 AM	55	0	23	2	80	2	0	30	2	34	3	331	17	4	355	5	304	0	2	311	780
07:15 AM	48	0	11	4	63	1	1	38	0	40	5	373	11	0	389	1	344	0	0	345	837
07:30 AM	59	1	12	8	80	2	0	43	3	48	3	361	17	1	382	3	308	0	4	315	825
07:45 AM	40	0	18	3	61	1	0	16	1	18	4	308	14	0	326	1	301	0	0	302	707
Total	202	1	64	17	284	6	1	127	6	140	15	1373	59	5	1452	10	1257	0	6	1273	3149
08:00 AM	49	0	12	0	61	1	0	18	0	19	8	331	23	0	362	6	301	0	0	307	749
08:15 AM	38	0	19	1	58	4	0	20	1	25	11	379	23	1	414	9	289	0	0	298	795
08:30 AM	20	0	17	8	45	1	1	21	0	23	2	343	14	1	360	6	265	0	3	274	702
08:45 AM	31	0	18	2	51	1	0	12	3	16	9	318	25	0	352	11	217	0	2	230	649
Total	138	0	66	11	215	7	1	71	4	83	30	1371	85	2	1488	32	1072	0	5	1109	2895
*** BREAK ***																					
03:00 PM	34	0	6	5	45	0	0	5	0	5	9	298	31	4	342	13	269	0	5	287	679
03:15 PM	14	0	17	1	32	2	0	4	3	9	15	300	44	0	359	10	290	0	1	301	701
03:30 PM	25	1	8	2	36	1	0	12	0	13	11	344	14	0	369	11	247	0	0	258	676
03:45 PM	17	0	8	6	31	0	0	6	0	6	5	351	32	1	389	8	303	0	0	311	737
Total	90	1	39	14	144	3	0	27	3	33	40	1293	121	5	1459	42	1109	0	6	1157	2793
04:00 PM	30	0	10	6	46	0	0	7	5	12	9	305	41	3	358	10	382	0	5	397	813
04:15 PM	28	0	8	7	43	0	0	5	3	8	7	343	40	3	393	15	344	0	2	361	805
04:30 PM	19	0	0	7	26	1	0	6	0	7	9	303	50	1	363	19	265	0	0	284	680
04:45 PM	22	0	13	8	43	0	0	2	1	3	8	292	44	2	346	17	334	0	2	353	745
Total	99	0	31	28	158	1	0	20	9	30	33	1243	175	9	1460	61	1325	0	9	1395	3043
05:00 PM	17	0	3	10	30	0	0	11	0	11	17	376	39	1	433	18	341	0	3	362	836
05:15 PM	26	0	12	1	39	0	0	7	0	7	13	405	42	2	462	14	359	0	0	373	881
05:30 PM	20	0	13	8	41	0	0	12	0	12	6	414	40	9	469	12	358	0	1	371	893
05:45 PM	26	0	12	2	40	0	0	4	0	4	10	448	38	3	499	16	351	0	1	368	911
Total	89	0	40	21	150	0	0	34	0	34	46	1643	159	15	1863	60	1409	0	5	1474	3521
06:00 PM	31	0	20	3	54	2	0	6	3	11	14	373	62	2	451	16	382	0	4	402	918
06:15 PM	23	0	14	3	40	0	0	11	3	14	13	423	50	2	488	12	305	0	4	321	863
06:30 PM	32	0	13	6	51	1	0	6	8	15	15	369	53	3	440	15	322	0	2	339	845
06:45 PM	24	0	20	7	51	1	0	8	1	10	8	364	36	2	410	22	276	0	4	302	773
Total	110	0	67	19	196	4	0	31	15	50	50	1529	201	9	1789	65	1285	0	14	1364	3399
Grand Total	859	2	357	120	1338	22	3	408	45	478	229	9332	829	47	10437	285	8312	0	47	8644	20897
Apprch %	64.2	0.1	26.7	9		4.6	0.6	85.4	9.4		2.2	89.4	7.9	0.5		3.3	96.2	0	0.5		
Total %	4.1	0	1.7	0.6	6.4	0.1	0	2	0.2	2.3	1.1	44.7	4	0.2	49.9	1.4	39.8	0	0.2	41.4	

Miami Gardens Drive & Bob-O-Link Drive

File Name : Miami Gardens Drive & Bob-O-Link Drive
Site Code : 00000000
Start Date : 5/11/2016
Page No : 2

Groups Printed- Veh - Trucks - Turns

	Boblink RD Southbound					Boblink RD Northbound					Miami Gardens Drive Westbound					Miami Gardens Drive Eastbound					
	Left	Thru	RIght	Peds/Bike	App. Total	Left	Thru	RIght	Peds/Bike	App. Total	Left	Thru	RIght	Peds/Bike	App. Total	Left	Thru	RIght	Peds/Bike	App. Total	Int. Total
Veh	836	2	347	86	1271	22	3	408	37	470	4	9174	807	41	10026	260	8158	0	44	8462	20229
% Veh	97.3	100	97.2	71.7	95	100	100	100	82.2	98.3	1.7	98.3	97.3	87.2	96.1	91.2	98.1	0	93.6	97.9	96.8
Trucks	23	0	10	33	66	0	0	0	8	8	0	157	22	6	185	14	154	0	3	171	430
% Trucks	2.7	0	2.8	27.5	4.9	0	0	0	17.8	1.7	0	1.7	2.7	12.8	1.8	4.9	1.9	0	6.4	2	2.1
U-Turns	0	0	0	1	1	0	0	0	0	0	225	1	0	0	226	11	0	0	0	11	238
% U-Turns	0	0	0	0.8	0.1	0	0	0	0	0	98.3	0	0	0	2.2	3.9	0	0	0	0.1	1.1

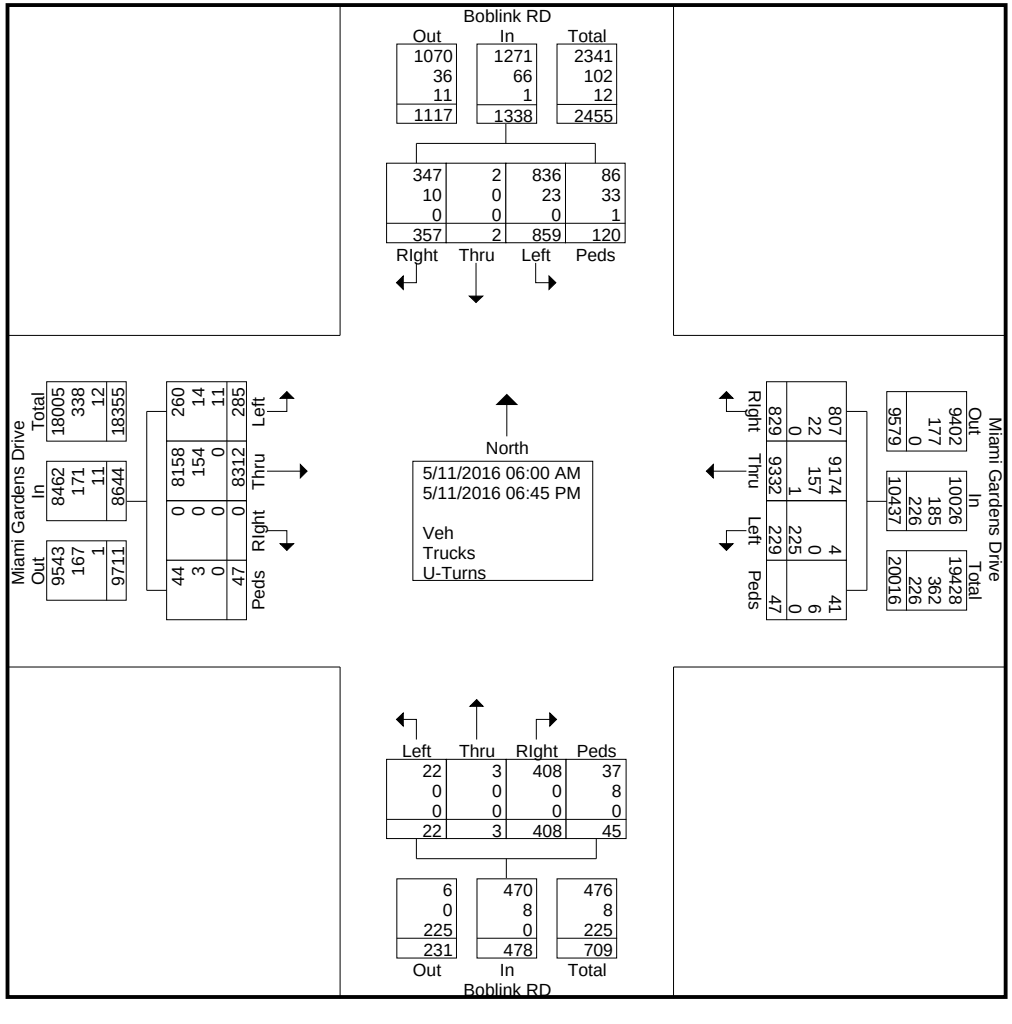

Miami Gardens Drive & Bob-O-Link Drive

File Name : Miami Gardens Drive & Bob-O-Link Drive
Site Code : 00000000
Start Date : 5/11/2016
Page No : 3

	Boblink RD Southbound					Boblink RD Northbound					Miami Gardens Drive Westbound					Miami Gardens Drive Eastbound					
Start Time	Left	Thru	RIght	Peds/Bike	App. Total	Left	Thru	RIght	Peds/Bike	App. Total	Left	Thru	RIght	Peds/Bike	App. Total	Left	Thru	RIght	Peds/Bike	App. Total	Int. Total
Peak Hour Analysis From 06:00 AM to 08:45 AM - Peak 1 of 1																					
Peak Hour for Entire Intersection Begins at 06:45 AM																					
06:45 AM	49	0	16	2	67	0	0	31	**8**	39	**5**	344	7	0	356	**8**	280	0	0	288	750
07:00 AM	55	0	**23**	2	**80**	**2**	0	30	2	34	3	331	**17**	**4**	355	5	304	0	2	311	780
07:15 AM	48	0	11	4	63	1	**1**	38	0	40	5	**373**	11	0	**389**	1	**344**	0	0	**345**	**837**
07:30 AM	**59**	**1**	12	**8**	80	2	0	**43**	3	**48**	3	361	17	1	382	3	308	0	**4**	315	825
Total Volume	211	1	62	16	290	5	1	142	13	161	16	1409	52	5	1482	17	1236	0	6	1259	3192
% App. Total	72.8	0.3	21.4	5.5		3.1	0.6	88.2	8.1		1.1	95.1	3.5	0.3		1.4	98.2	0	0.5		
PHF	.894	.250	.674	.500	.906	.625	.250	.826	.406	.839	.800	.944	.765	.313	.952	.531	.898	.000	.375	.912	.953

Miami Gardens Drive & Bob-O-Link Drive

File Name : Miami Gardens Drive & Bob-O-Link Drive
Site Code : 00000000
Start Date : 5/11/2016
Page No : 4

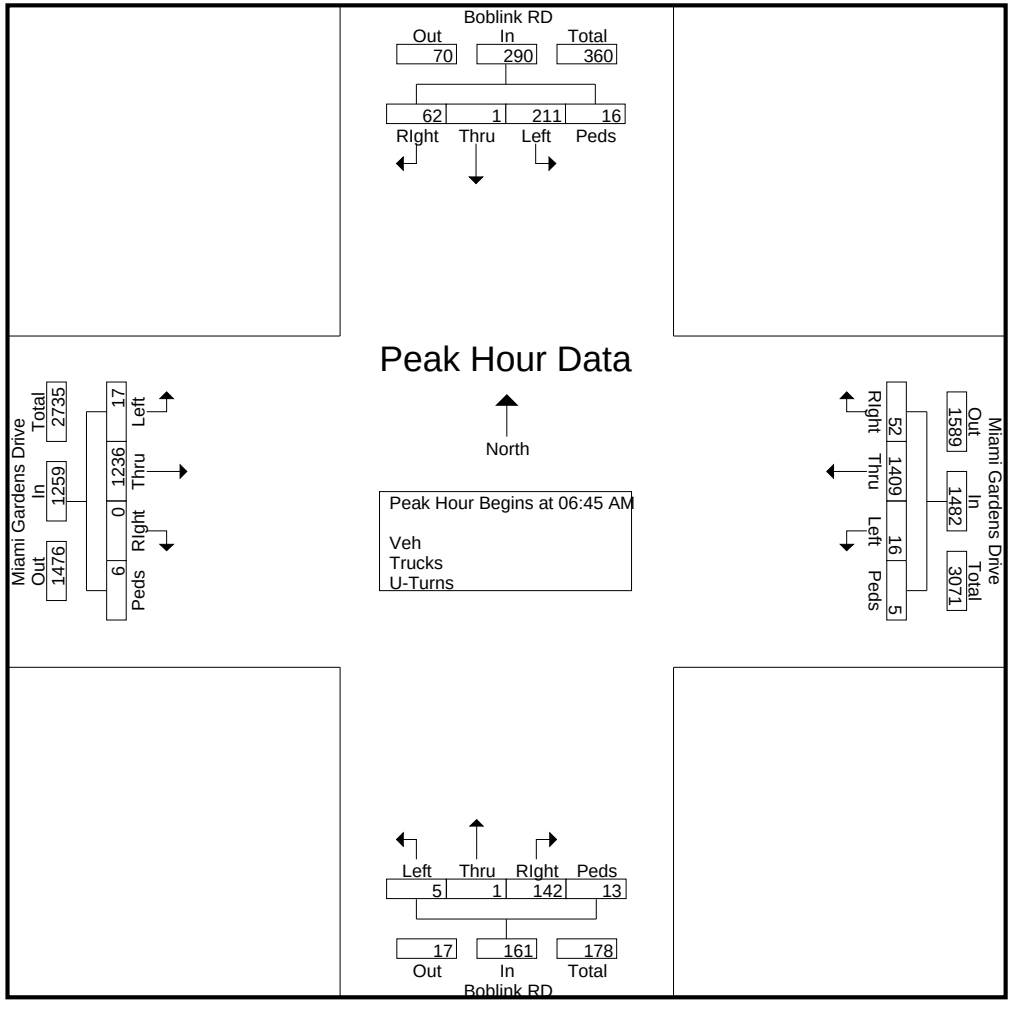

Miami Gardens Drive & Bob-O-Link Drive

File Name : Miami Gardens Drive & Bob-O-Link Drive
Site Code : 00000000
Start Date : 5/11/2016
Page No : 5

	Boblink RD Southbound					Boblink RD Northbound					Miami Gardens Drive Westbound					Miami Gardens Drive Eastbound					
Start Time	Left	Thru	RIght	Peds/Bike	App. Total	Left	Thru	RIght	Peds/Bike	App. Total	Left	Thru	RIght	Peds/Bike	App. Total	Left	Thru	RIght	Peds/Bike	App. Total	Int. Total
Peak Hour Analysis From 03:00 PM to 06:45 PM - Peak 1 of 1																					
Peak Hour for Entire Intersection Begins at 05:15 PM																					
05:15 PM	26	0	12	1	39	0	0	7	0	7	13	405	42	2	462	14	359	0	0	373	881
05:30 PM	20	0	13	**8**	41	0	0	**12**	0	**12**	6	414	40	**9**	469	12	358	0	1	371	893
05:45 PM	26	0	12	2	40	0	0	4	0	4	10	**448**	38	3	**499**	**16**	351	0	1	368	911
06:00 PM	**31**	0	**20**	3	**54**	**2**	0	6	**3**	11	**14**	373	**62**	2	451	16	**382**	0	**4**	**402**	**918**
Total Volume	103	0	57	14	174	2	0	29	3	34	43	1640	182	16	1881	58	1450	0	6	1514	3603
% App. Total	59.2	0	32.8	8		5.9	0	85.3	8.8		2.3	87.2	9.7	0.9		3.8	95.8	0	0.4		
PHF	.831	.000	.713	.438	.806	.250	.000	.604	.250	.708	.768	.915	.734	.444	.942	.906	.949	.000	.375	.942	.981

Miami Gardens Drive & Bob-O-Link Drive

File Name : Miami Gardens Drive & Bob-O-Link Drive
Site Code : 00000000
Start Date : 5/11/2016
Page No : 6

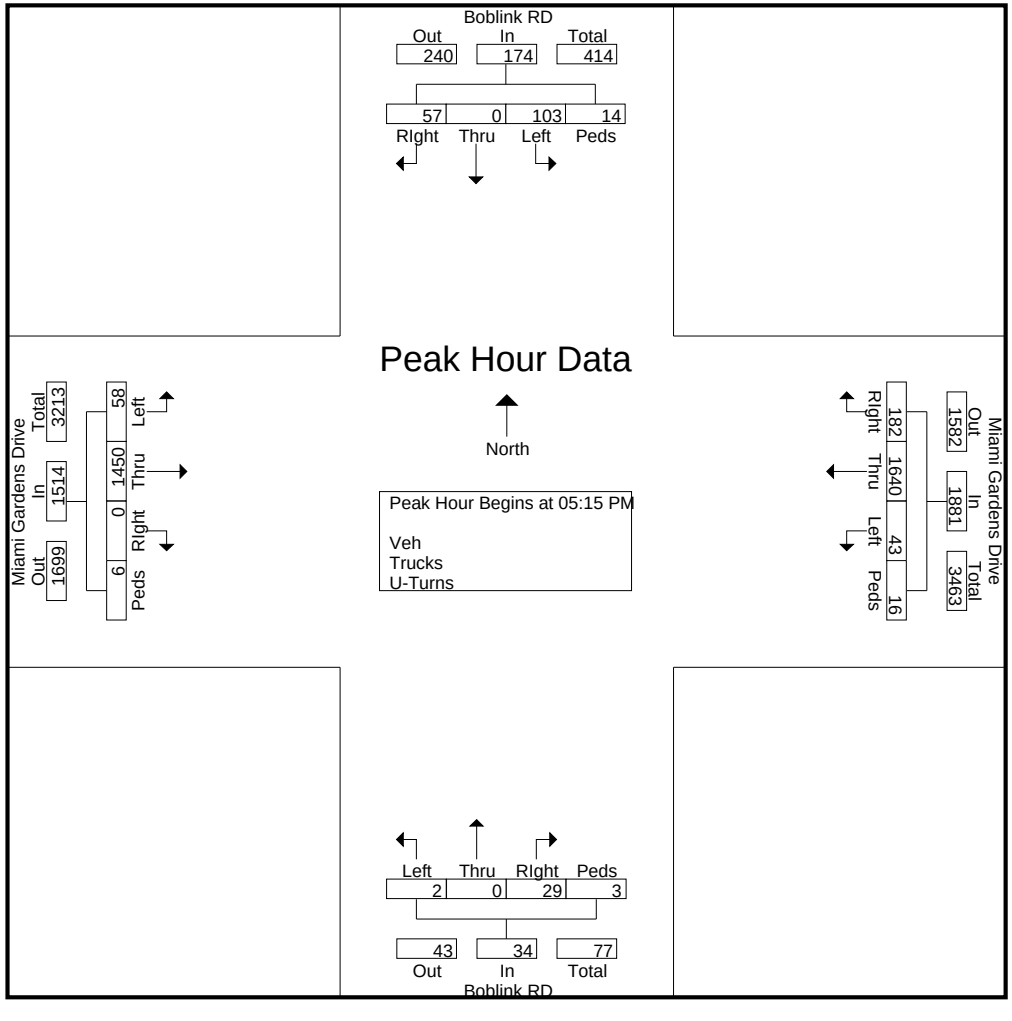

Miami Gardens Drive & Ludlam Road

File Name : Miami Gardens Drive & Ludlam Road
Site Code : 00000000
Start Date : 5/11/2016
Page No : 1

Groups Printed- Trucks

	Ludlam Road Southbound					Ludlam Road Northbound					Miami Gardens Drive Westbound					Miami Gardens Drive Eastbound					
Start Time	Left	Thru	RIght	Bikes	App. Total	Left	Thru	RIght	Bikes	App. Total	Left	Thru	RIght	Bikes	App. Total	Left	Thru	RIght	Bikes	App. Total	Int. Total
06:00 AM	0	1	1	0	2	1	3	1	0	5	0	3	1	0	4	0	3	0	0	3	14
06:15 AM	0	3	1	0	4	6	0	1	1	8	3	9	0	1	13	2	7	1	0	10	35
06:30 AM	1	0	0	0	1	5	1	3	0	9	1	3	0	1	5	1	5	4	0	10	25
06:45 AM	0	7	1	0	8	2	0	2	1	5	4	2	0	0	6	1	7	2	1	11	30
Total	1	11	3	0	15	14	4	7	2	27	8	17	1	2	28	4	22	7	1	34	104
07:00 AM	0	2	1	0	3	2	1	0	1	4	0	4	0	0	4	1	3	1	0	5	16
07:15 AM	0	5	0	0	5	1	3	3	0	7	0	5	0	0	5	0	3	1	0	4	21
07:30 AM	0	3	3	1	7	1	4	1	0	6	0	3	1	0	4	3	4	0	0	7	24
07:45 AM	0	4	0	0	4	1	2	1	2	6	2	4	0	1	7	0	5	0	0	5	22
Total	0	14	4	1	19	5	10	5	3	23	2	16	1	1	20	4	15	2	0	21	83
08:00 AM	0	0	2	0	2	1	4	1	0	6	2	5	0	1	8	1	2	0	0	3	19
08:15 AM	0	4	0	0	4	4	3	3	0	10	3	4	0	0	7	0	4	4	0	8	29
08:30 AM	0	1	4	1	6	4	1	2	1	8	3	4	1	0	8	1	1	5	1	8	30
08:45 AM	0	4	2	0	6	2	3	1	0	6	1	7	0	0	8	1	8	0	0	9	29
Total	0	9	8	1	18	11	11	7	1	30	9	20	1	1	31	3	15	9	1	28	107
*** BREAK ***																					
03:00 PM	1	3	3	0	7	0	2	3	0	5	3	2	0	0	5	0	11	4	0	15	32
03:15 PM	1	2	4	0	7	1	3	3	0	7	0	5	0	0	5	2	3	0	0	5	24
03:30 PM	0	3	2	0	5	0	2	1	0	3	0	8	0	0	8	2	3	0	0	5	21
03:45 PM	0	0	1	0	1	1	3	3	1	8	1	2	0	1	4	4	2	0	0	6	19
Total	2	8	10	0	20	2	10	10	1	23	4	17	0	1	22	8	19	4	0	31	96
04:00 PM	3	2	0	0	5	3	3	1	0	7	1	1	0	0	2	9	4	1	0	14	28
04:15 PM	1	2	4	0	7	1	6	2	1	10	1	5	0	0	6	10	14	3	1	28	51
04:30 PM	0	4	1	0	5	1	0	2	1	4	5	4	1	1	11	3	5	0	0	8	28
04:45 PM	0	2	1	0	3	0	2	0	0	2	1	2	0	0	3	2	5	1	0	8	16
Total	4	10	6	0	20	5	11	5	2	23	8	12	1	1	22	24	28	5	1	58	123
05:00 PM	1	0	1	0	2	0	3	0	0	3	0	3	0	0	3	1	4	0	0	5	13
05:15 PM	0	0	1	0	1	1	2	1	0	4	0	2	0	1	3	3	1	1	0	5	13
05:30 PM	1	3	0	0	4	0	0	1	0	1	0	2	0	0	2	1	3	0	0	4	11
05:45 PM	0	4	3	0	7	0	0	2	0	2	0	2	0	0	2	3	2	1	0	6	17
Total	2	7	5	0	14	1	5	4	0	10	0	9	0	1	10	8	10	2	0	20	54
06:00 PM	0	0	0	0	0	0	0	1	0	1	1	4	0	1	6	0	2	0	0	2	9
06:15 PM	0	0	1	0	1	0	1	0	0	1	0	3	0	0	3	1	1	0	0	2	7
06:30 PM	0	0	0	0	0	0	0	0	0	0	0	1	0	0	1	0	2	0	0	2	3
06:45 PM	1	0	1	0	2	0	2	1	0	3	1	5	1	0	7	0	3	0	0	3	15
Total	1	0	2	0	3	0	3	2	0	5	2	13	1	1	17	1	8	0	0	9	34
Grand Total	10	59	38	2	109	38	54	40	9	141	33	104	5	8	150	52	117	29	3	201	601
Apprch %	9.2	54.1	34.9	1.8		27	38.3	28.4	6.4		22	69.3	3.3	5.3		25.9	58.2	14.4	1.5		
Total %	1.7	9.8	6.3	0.3	18.1	6.3	9	6.7	1.5	23.5	5.5	17.3	0.8	1.3	25	8.7	19.5	4.8	0.5	33.4	

Miami Gardens Drive & Ludlam Road

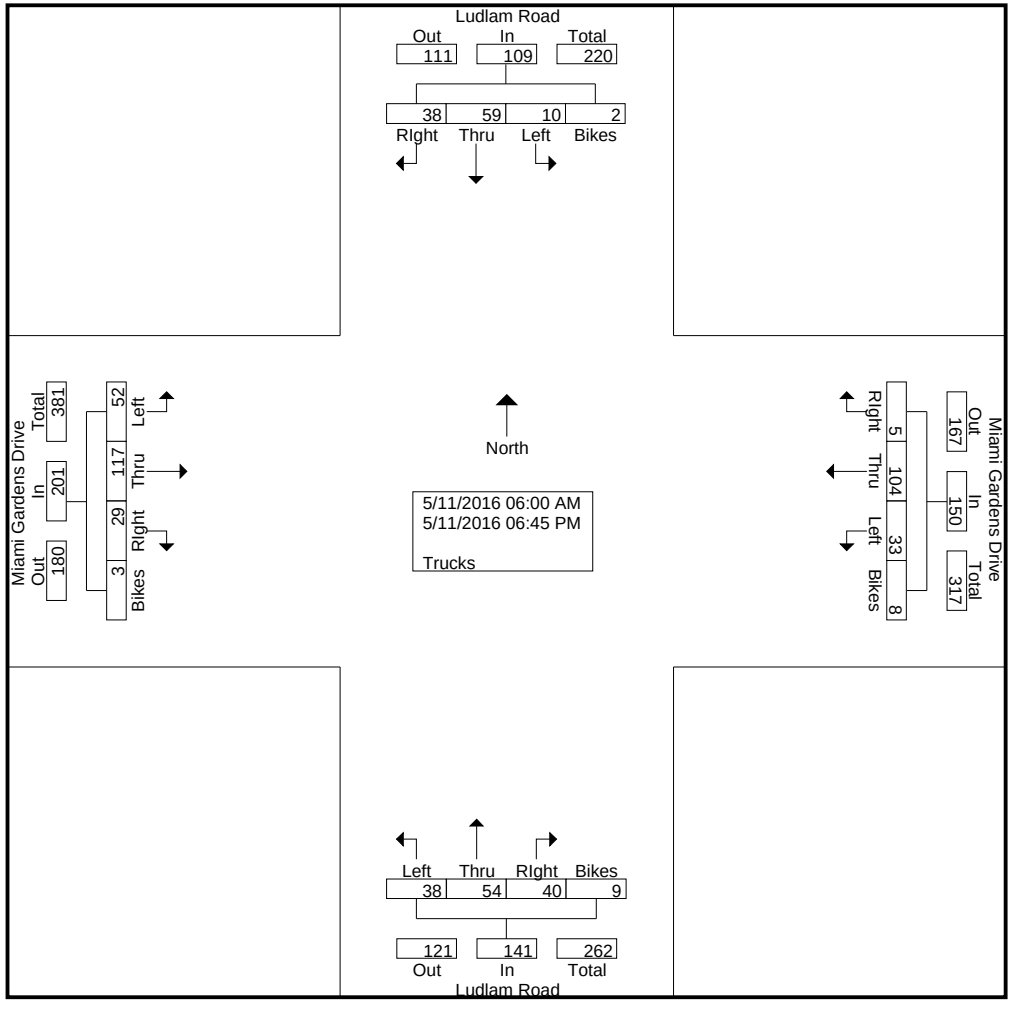

Miami Gardens Drive & Ludlam Road

File Name : Miami Gardens Drive & Ludlam Road
Site Code : 00000000
Start Date : 5/11/2016

	Ludlam Road Southbound					Ludlam Road Northbound					Miami Gardens Drive Westbound					Miami Gardens Drive Eastbound					
Start Time	Left	Thru	RIght	Bikes	App. Total	Left	Thru	RIght	Bikes	App. Total	Left	Thru	RIght	Bikes	App. Total	Left	Thru	RIght	Bikes	App. Total	Int. Total
Peak Hour Analysis From 06:00 AM to 08:45 AM - Peak 1 of 1																					
Peak Hour for Entire Intersection Begins at 08:00 AM																					
08:00 AM	0	0	2	0	2	1	**4**	1	0	6	2	5	0	**1**	**8**	**1**	2	0	0	3	19
08:15 AM	0	**4**	0	0	4	**4**	3	**3**	0	**10**	**3**	4	0	0	7	0	4	4	0	8	29
08:30 AM	0	1	**4**	**1**	**6**	4	1	2	**1**	8	3	4	**1**	0	8	1	1	**5**	**1**	8	**30**
08:45 AM	0	4	2	0	6	2	3	1	0	6	1	**7**	0	0	8	1	**8**	0	0	**9**	29
Total Volume	0	9	8	1	18	11	11	7	1	30	9	20	1	1	31	3	15	9	1	28	107
% App. Total	0	50	44.4	5.6		36.7	36.7	23.3	3.3		29	64.5	3.2	3.2		10.7	53.6	32.1	3.6		
PHF	.000	.563	.500	.250	.750	.688	.688	.583	.250	.750	.750	.714	.250	.250	.969	.750	.469	.450	.250	.778	.892

Miami Gardens Drive & Ludlam Road

File Name : Miami Gardens Drive & Ludlam Road
Site Code : 00000000
Start Date : 5/11/2016
Page No : 4

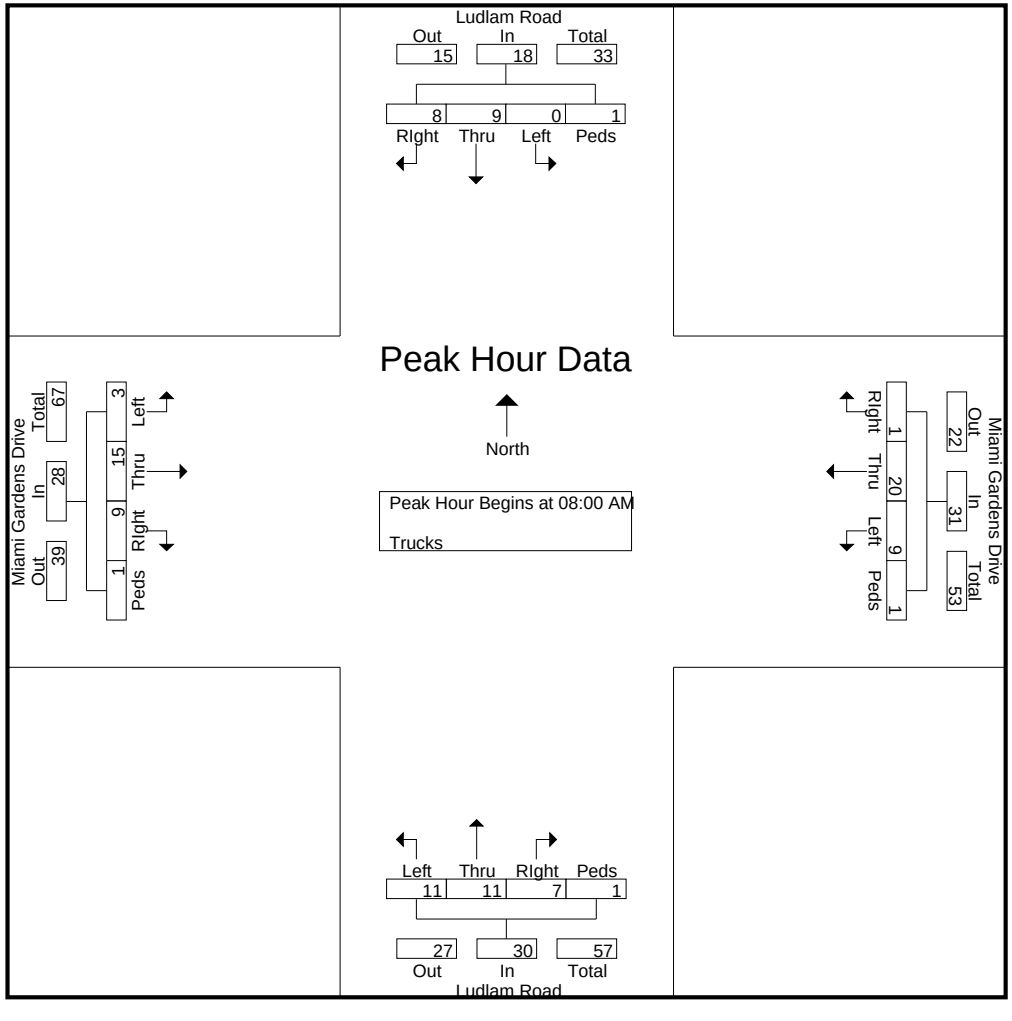

Miami Gardens Drive & Ludlam Road

File Name : Miami Gardens Drive & Ludlam Road
Site Code : 00000000
Start Date : 5/11/2016

	Ludlam Road Southbound					Ludlam Road Northbound					Miami Gardens Drive Westbound					Miami Gardens Drive Eastbound					
Start Time	Left	Thru	RIght	Bikes	App. Total	Left	Thru	RIght	Bikes	App. Total	Left	Thru	RIght	Bikes	App. Total	Left	Thru	RIght	Bikes	App. Total	Int. Total
Peak Hour Analysis From 03:00 PM to 06:45 PM - Peak 1 of 1																					
Peak Hour for Entire Intersection Begins at 03:45 PM																					
03:45 PM	0	0	1	0	1	1	3	**3**	**1**	8	1	2	0	**1**	4	4	2	0	0	6	19
04:00 PM	**3**	2	0	0	5	**3**	3	1	0	7	1	1	0	0	2	9	4	1	0	14	28
04:15 PM	1	2	**4**	0	**7**	1	**6**	2	1	**10**	1	**5**	0	0	6	**10**	**14**	**3**	**1**	**28**	**51**
04:30 PM	0	**4**	1	0	5	1	0	2	1	4	**5**	4	**1**	1	**11**	3	5	0	0	8	28
Total Volume	4	8	6	0	18	6	12	8	3	29	8	12	1	2	23	26	25	4	1	56	126
% App. Total	22.2	44.4	33.3	0		20.7	41.4	27.6	10.3		34.8	52.2	4.3	8.7		46.4	44.6	7.1	1.8		
PHF	.333	.500	.375	.000	.643	.500	.500	.667	.750	.725	.400	.600	.250	.500	.523	.650	.446	.333	.250	.500	.618

Miami Gardens Drive & Ludlam Road

File Name : Miami Gardens Drive & Ludlam Road
Site Code : 00000000
Start Date : 5/11/2016
Page No : 6

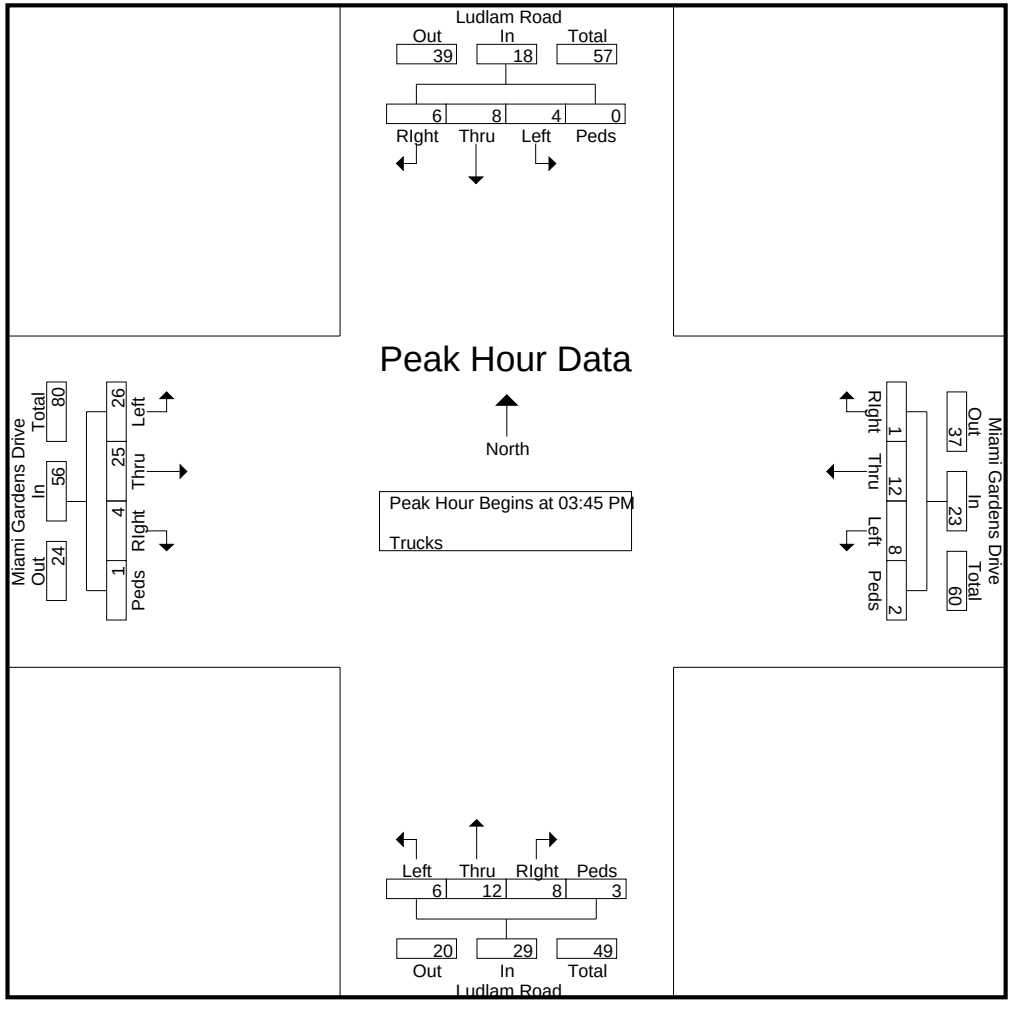

Miami Gardens Drive & Ludlam Road

File Name : Miami Gardens Drive & Ludlam Road
Site Code : 00000000
Start Date : 5/11/2016
Page No : 1

Groups Printed- Turns

	Ludlam Road Southbound					Ludlam Road Northbound					Miami Gardens Drive Westbound					Miami Gardens Drive Eastbound					
Start Time	Left	Thru	RIght	Peds/Bike	App. Total	Left	Thru	RIght	Peds/Bike	App. Total	Left	Thru	RIght	Peds/Bike	App. Total	Left	Thru	RIght	Peds/Bike	App. Total	Int. Total
*** BREAK ***																					
06:15 AM	0	0	0	0	0	1	0	0	0	1	0	0	0	0	0	0	0	0	0	0	1
*** BREAK ***																					
06:45 AM	0	0	0	0	0	1	0	0	0	1	0	0	0	0	0	0	0	0	0	0	1
Total	0	0	0	0	0	2	0	0	0	2	0	0	0	0	0	0	0	0	0	0	2
07:00 AM	0	0	0	0	0	0	0	0	0	0	1	0	0	0	1	0	0	0	0	0	1
07:15 AM	0	0	0	0	0	0	0	0	0	0	0	0	0	0	0	1	0	0	0	1	1
07:30 AM	0	0	0	0	0	1	0	0	0	1	0	0	0	0	0	0	0	0	0	0	1
07:45 AM	0	0	0	0	0	2	0	0	0	2	0	0	0	0	0	1	0	0	0	1	3
Total	0	0	0	0	0	3	0	0	0	3	1	0	0	0	1	2	0	0	0	2	6
08:00 AM	0	0	0	0	0	2	0	0	0	2	0	0	0	0	0	0	0	0	0	0	2
08:15 AM	0	0	0	0	0	0	0	0	0	0	1	0	0	0	1	0	1	0	0	1	2
08:30 AM	0	0	0	0	0	0	0	0	0	0	2	0	0	0	2	0	0	0	0	0	2
08:45 AM	0	0	0	0	0	1	0	0	0	1	0	0	0	0	0	0	0	0	0	0	1
Total	0	0	0	0	0	3	0	0	0	3	3	0	0	0	3	0	1	0	0	1	7
*** BREAK ***																					
03:00 PM	0	0	0	0	0	0	0	0	0	0	1	0	0	0	1	0	0	0	0	0	1
03:15 PM	0	0	0	0	0	4	0	0	0	4	0	0	0	0	0	1	0	0	0	1	5
03:30 PM	0	0	0	0	0	3	0	0	0	3	1	0	0	0	1	1	0	0	0	1	5
03:45 PM	0	0	0	0	0	5	0	0	0	5	1	0	0	0	1	0	0	0	0	0	6
Total	0	0	0	0	0	12	0	0	0	12	3	0	0	0	3	2	0	0	0	2	17
04:00 PM	0	0	0	0	0	2	1	0	0	3	0	0	0	0	0	2	0	0	0	2	5
04:15 PM	0	0	0	0	0	2	0	0	0	2	1	0	0	0	1	1	0	0	0	1	4
04:30 PM	0	0	0	0	0	2	0	0	0	2	2	0	0	0	2	1	0	0	0	1	5
04:45 PM	0	0	0	0	0	6	0	0	0	6	2	0	0	0	2	1	0	0	0	1	9
Total	0	0	0	0	0	12	1	0	0	13	5	0	0	0	5	5	0	0	0	5	23
05:00 PM	0	0	0	0	0	3	0	0	0	3	0	0	0	0	0	1	0	0	0	1	4
05:15 PM	1	0	0	0	1	3	0	0	0	3	0	0	0	0	0	1	0	0	0	1	5
05:30 PM	0	0	0	0	0	2	0	0	0	2	3	0	0	0	3	3	0	0	0	3	8
05:45 PM	0	0	0	0	0	0	0	0	0	0	0	0	0	0	0	1	0	0	0	1	1
Total	1	0	0	0	1	8	0	0	0	8	3	0	0	0	3	6	0	0	0	6	18
06:00 PM	0	0	0	0	0	3	0	0	0	3	0	0	0	0	0	0	0	0	0	0	3
06:15 PM	0	0	0	0	0	0	0	0	0	0	0	0	0	0	0	1	0	0	0	1	1
06:30 PM	0	0	0	0	0	0	0	0	0	0	0	0	0	0	0	3	0	0	0	3	3
06:45 PM	0	0	0	0	0	4	0	0	0	4	2	0	0	0	2	4	0	0	0	4	10
Total	0	0	0	0	0	7	0	0	0	7	2	0	0	0	2	8	0	0	0	8	17
Grand Total	1	0	0	0	1	47	1	0	0	48	17	0	0	0	17	23	1	0	0	24	90
Apprch %	100	0	0	0		97.9	2.1	0	0		100	0	0	0		95.8	4.2	0	0		
Total %	1.1	0	0	0	1.1	52.2	1.1	0	0	53.3	18.9	0	0	0	18.9	25.6	1.1	0	0	26.7	

Miami Gardens Drive & Ludlam Road

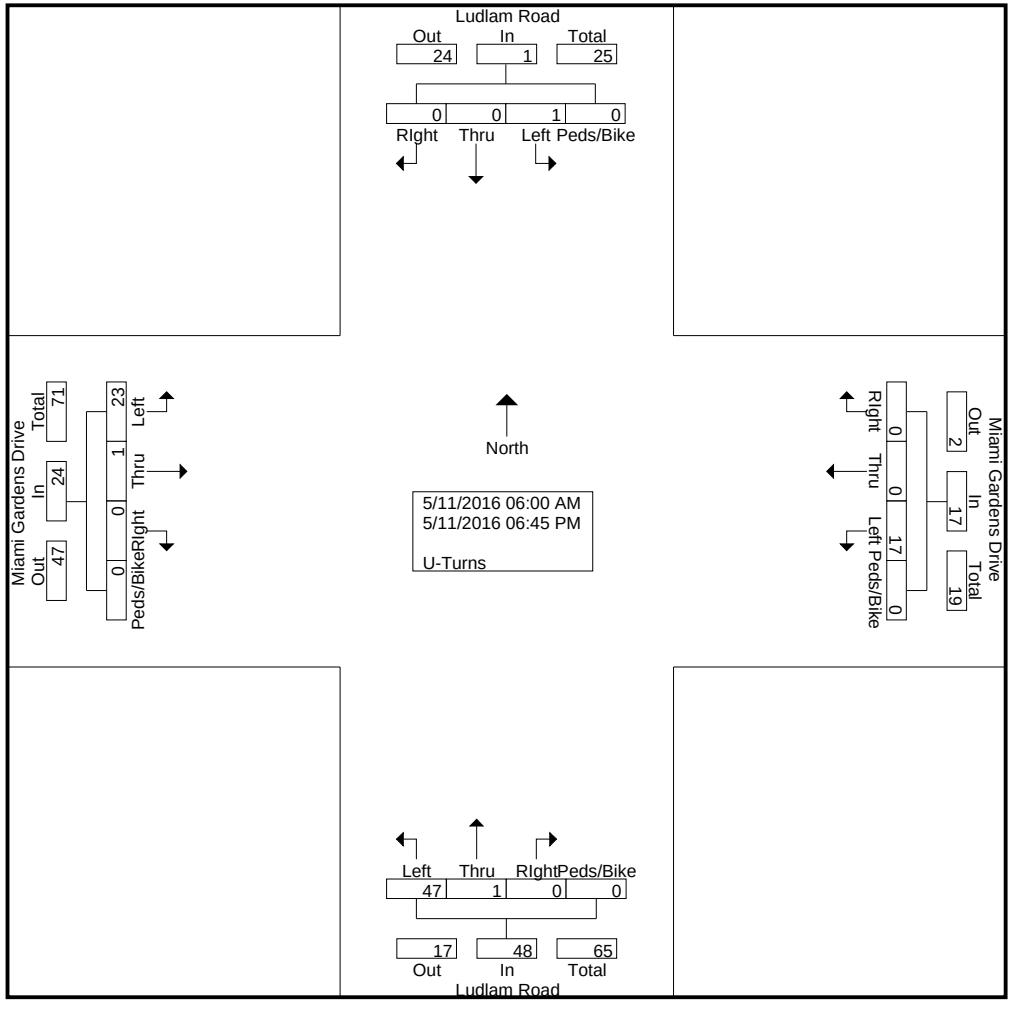

Miami Gardens Drive & Ludlam Road

File Name : Miami Gardens Drive & Ludlam Road
Site Code : 00000000
Start Date : 5/11/2016
Page No : 3

	Ludlam Road Southbound					Ludlam Road Northbound					Miami Gardens Drive Westbound					Miami Gardens Drive Eastbound					
Start Time	Left	Thru	RIght	Peds/Bike	App. Total	Left	Thru	RIght	Peds/Bike	App. Total	Left	Thru	RIght	Peds/Bike	App. Total	Left	Thru	RIght	Peds/Bike	App. Total	Int. Total
Peak Hour Analysis From 06:00 AM to 08:45 AM - Peak 1 of 1																					
Peak Hour for Entire Intersection Begins at 07:45 AM																					
07:45 AM	0	0	0	0	0	**2**	0	0	0	**2**	0	0	0	0	0	**1**	0	0	0	**1**	**3**
08:00 AM	0	0	0	0	0	2	0	0	0	2	0	0	0	0	0	0	0	0	0	0	2
08:15 AM	0	0	0	0	0	0	0	0	0	0	1	0	0	0	1	0	**1**	0	0	1	2
08:30 AM	0	0	0	0	0	0	0	0	0	0	**2**	0	0	0	**2**	0	0	0	0	0	2
Total Volume	0	0	0	0	0	4	0	0	0	4	3	0	0	0	3	1	1	0	0	2	9
% App. Total	0	0	0	0		100	0	0	0		100	0	0	0		50	50	0	0		
PHF	.000	.000	.000	.000	.000	.500	.000	.000	.000	.500	.375	.000	.000	.000	.375	.250	.250	.000	.000	.500	.750

Miami Gardens Drive & Ludlam Road

File Name : Miami Gardens Drive & Ludlam Road
Site Code : 00000000
Start Date : 5/11/2016
Page No : 4

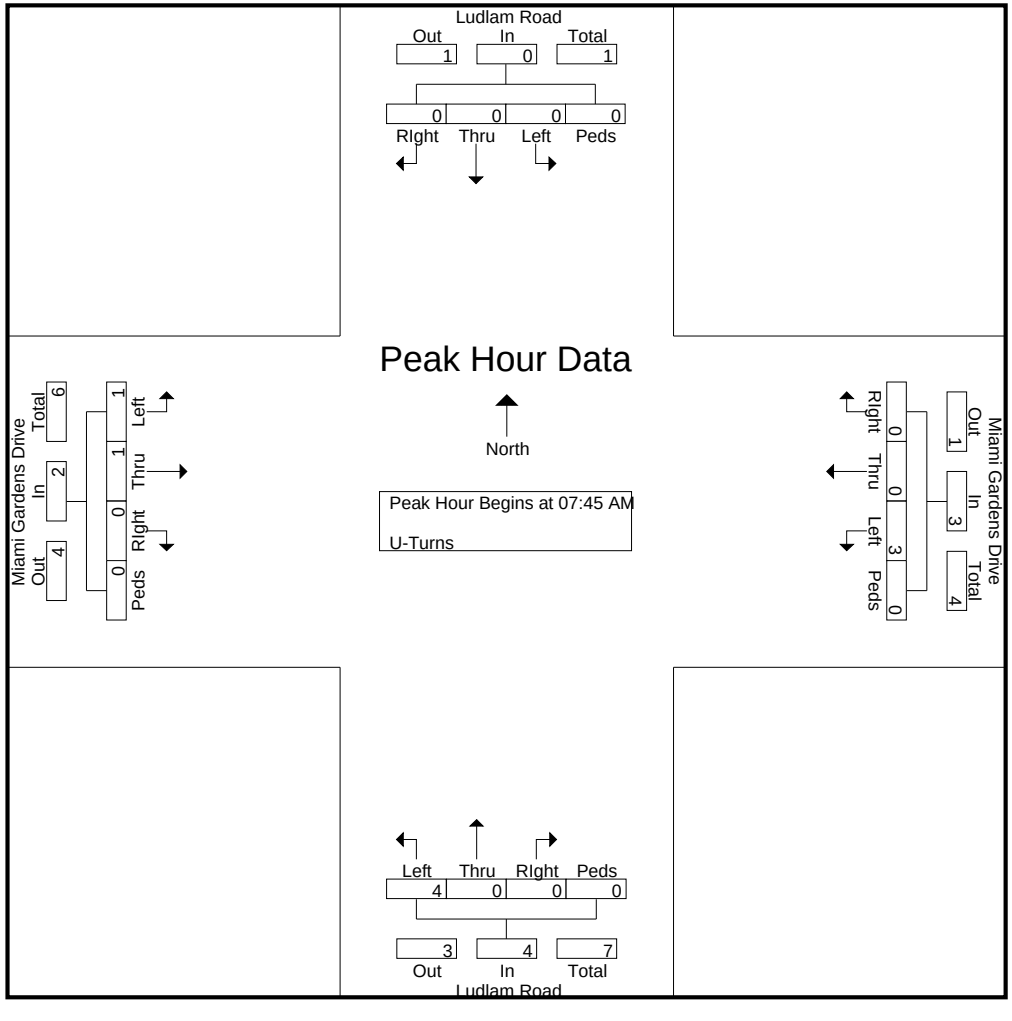

Miami Gardens Drive & Ludlam Road

File Name : Miami Gardens Drive & Ludlam Road
Site Code : 00000000
Start Date : 5/11/2016

	Ludlam Road Southbound					Ludlam Road Northbound					Miami Gardens Drive Westbound					Miami Gardens Drive Eastbound					
Start Time	Left	Thru	RIght	Peds/Bike	App. Total	Left	Thru	RIght	Peds/Bike	App. Total	Left	Thru	RIght	Peds/Bike	App. Total	Left	Thru	RIght	Peds/Bike	App. Total	Int. Total
Peak Hour Analysis From 03:00 PM to 06:45 PM - Peak 1 of 1																					
Peak Hour for Entire Intersection Begins at 04:45 PM																					
04:45 PM	0	0	0	0	0	**6**	0	0	0	**6**	2	0	0	0	2	1	0	0	0	1	**9**
05:00 PM	0	0	0	0	0	3	0	0	0	3	0	0	0	0	0	1	0	0	0	1	4
05:15 PM	**1**	0	0	0	**1**	3	0	0	0	3	0	0	0	0	0	1	0	0	0	1	5
05:30 PM	0	0	0	0	0	2	0	0	0	2	**3**	0	0	0	**3**	**3**	0	0	0	**3**	8
Total Volume	1	0	0	0	1	14	0	0	0	14	5	0	0	0	5	6	0	0	0	6	26
% App. Total	100	0	0	0		100	0	0	0		100	0	0	0		100	0	0	0		
PHF	.250	.000	.000	.000	.250	.583	.000	.000	.000	.583	.417	.000	.000	.000	.417	.500	.000	.000	.000	.500	.722

Miami Gardens Drive & Ludlam Road

File Name : Miami Gardens Drive & Ludlam Road
Site Code : 00000000
Start Date : 5/11/2016
Page No : 6

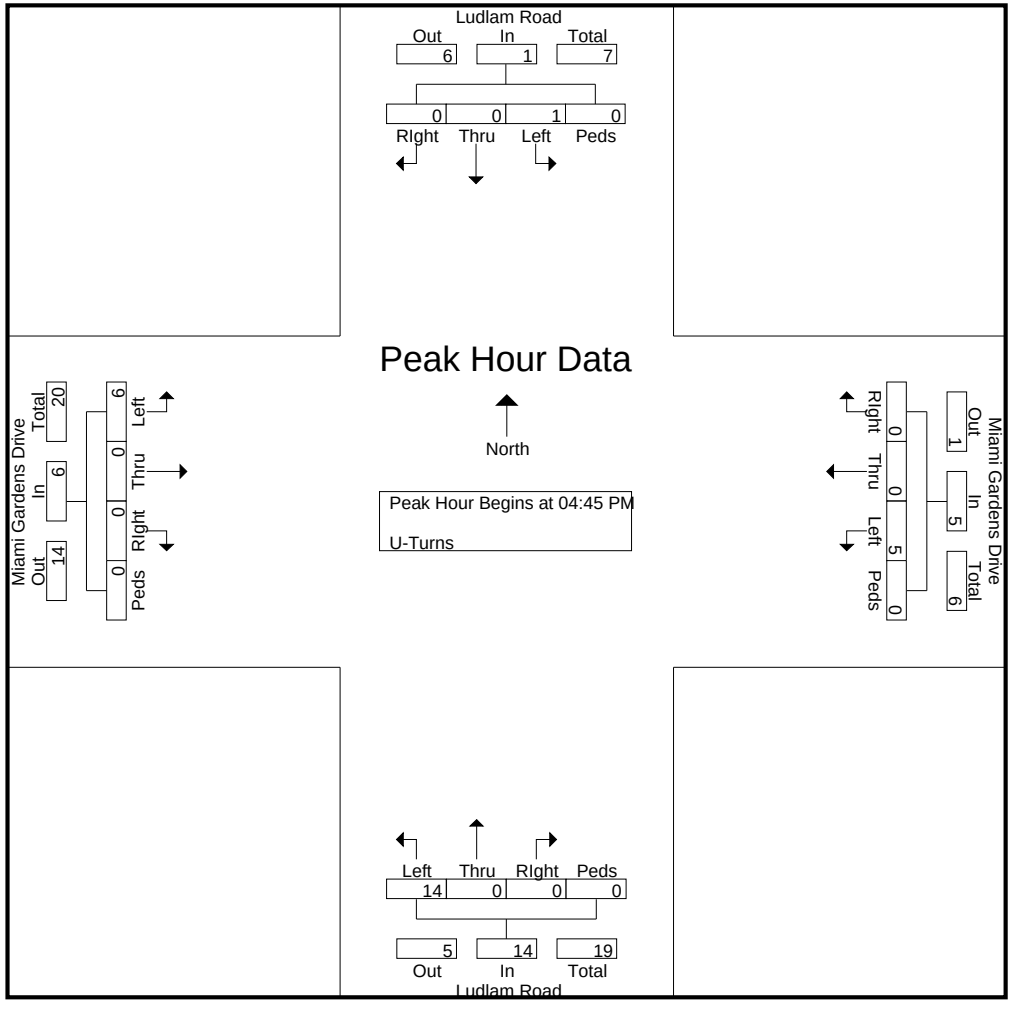

Miami Gardens Drive & Ludlam Road

File Name : Miami Gardens Drive & Ludlam Road
Site Code : 00000000
Start Date : 5/11/2016
Page No : 1

Groups Printed- Veh - Trucks - Turns

	Ludlam Road Southbound					Ludlam Road Northbound					Miami Gardens Drive Westbound					Miami Gardens Drive Eastbound					
Start Time	Left	Thru	RIght	Peds/Bike	App. Total	Left	Thru	RIght	Peds/Bike	App. Total	Left	Thru	RIght	Peds/Bike	App. Total	Left	Thru	RIght	Peds/Bike	App. Total	Int. Total
06:00 AM	22	154	22	0	198	7	47	24	0	78	25	66	8	0	99	25	93	46	0	164	539
06:15 AM	17	216	35	0	268	14	68	32	1	115	48	123	6	1	178	46	129	57	1	233	794
06:30 AM	35	224	54	2	315	49	128	41	0	218	52	165	5	1	223	63	181	66	6	316	1072
06:45 AM	49	256	44	5	354	53	130	62	2	247	61	248	9	2	320	87	210	52	11	360	1281
Total	123	850	155	7	1135	123	373	159	3	658	186	602	28	4	820	221	613	221	18	1073	3686
07:00 AM	43	225	43	6	317	65	171	90	4	330	73	227	17	4	321	52	236	70	5	363	1331
07:15 AM	42	192	49	0	283	73	215	82	0	370	77	248	20	0	345	67	311	38	2	418	1416
07:30 AM	56	220	68	1	345	52	219	73	0	344	52	273	18	0	343	54	281	51	6	392	1424
07:45 AM	73	199	72	0	344	37	203	59	2	301	55	246	25	1	327	64	228	31	0	323	1295
Total	214	836	232	7	1289	227	808	304	6	1345	257	994	80	5	1336	237	1056	190	13	1496	5466
08:00 AM	60	219	84	6	369	67	185	78	13	343	33	215	28	4	280	56	269	24	4	353	1345
08:15 AM	66	216	48	2	332	63	192	73	0	328	62	294	21	0	377	85	215	30	9	339	1376
08:30 AM	66	191	94	1	352	73	218	92	4	387	69	207	12	0	288	89	170	22	11	292	1319
08:45 AM	46	174	93	0	313	68	136	65	0	269	41	176	22	0	239	89	157	51	0	297	1118
Total	238	800	319	9	1366	271	731	308	17	1327	205	892	83	4	1184	319	811	127	24	1281	5158
*** BREAK ***																					
03:00 PM	45	172	53	3	273	60	164	64	8	296	80	210	24	1	315	81	187	31	9	308	1192
03:15 PM	54	182	75	5	316	70	185	44	3	302	73	206	11	1	291	81	194	36	9	320	1229
03:30 PM	44	181	46	0	271	67	164	87	3	321	65	245	20	0	330	68	194	25	6	293	1215
03:45 PM	61	208	78	1	348	83	196	84	2	365	74	229	18	1	322	63	215	43	7	328	1363
Total	204	743	252	9	1208	280	709	279	16	1284	292	890	73	3	1258	293	790	135	31	1249	4999
04:00 PM	50	150	59	5	264	77	204	73	1	355	63	204	15	6	288	94	284	21	2	401	1308
04:15 PM	54	183	91	1	329	70	175	69	3	317	77	240	17	2	336	86	247	32	3	368	1350
04:30 PM	52	201	83	0	336	86	191	66	5	348	95	197	23	2	317	100	178	23	3	304	1305
04:45 PM	46	156	62	0	264	80	184	63	3	330	72	212	29	0	313	106	200	28	1	335	1242
Total	202	690	295	6	1193	313	754	271	12	1350	307	853	84	10	1254	386	909	104	9	1408	5205
05:00 PM	48	177	70	1	296	89	202	82	6	379	79	272	35	2	388	98	207	45	2	352	1415
05:15 PM	46	199	102	1	348	77	201	68	2	348	74	269	27	3	373	104	245	25	0	374	1443
05:30 PM	58	231	78	7	374	72	208	81	0	361	88	301	19	2	410	105	221	36	1	363	1508
05:45 PM	50	235	88	0	373	90	223	62	0	375	78	311	17	2	408	116	218	31	0	365	1521
Total	202	842	338	9	1391	328	834	293	8	1463	319	1153	98	9	1579	423	891	137	3	1454	5887
06:00 PM	55	233	62	1	351	91	223	73	2	389	114	305	23	4	446	117	263	29	0	409	1595
06:15 PM	42	231	63	1	337	94	201	79	1	375	107	320	27	3	457	112	214	41	0	367	1536
06:30 PM	58	205	64	2	329	77	211	75	2	365	110	303	18	7	438	120	214	30	2	366	1498
06:45 PM	53	164	83	4	304	89	172	66	3	330	89	245	29	3	366	99	154	58	5	316	1316
Total	208	833	272	8	1321	351	807	293	8	1459	420	1173	97	17	1707	448	845	158	7	1458	5945
Grand Total	1391	5594	1863	55	8903	1893	5016	1907	70	8886	1986	6557	543	52	9138	2327	5915	1072	105	9419	36346
Apprch %	15.6	62.8	20.9	0.6		21.3	56.4	21.5	0.8		21.7	71.8	5.9	0.6		24.7	62.8	11.4	1.1		
Total %	3.8	15.4	5.1	0.2	24.5	5.2	13.8	5.2	0.2	24.4	5.5	18	1.5	0.1	25.1	6.4	16.3	2.9	0.3	25.9	

Miami Gardens Drive & Ludlam Road

File Name : Miami Gardens Drive & Ludlam Road
Site Code : 00000000
Start Date : 5/11/2016
Page No : 2

Groups Printed- Veh - Trucks - Turns

	Ludlam Road Southbound					Ludlam Road Northbound					Miami Gardens Drive Westbound					Miami Gardens Drive Eastbound					
	Left	Thru	RIght	Peds/Bike	App. Total	Left	Thru	RIght	Peds/Bike	App. Total	Left	Thru	RIght	Peds/Bike	App. Total	Left	Thru	RIght	Peds/Bike	App. Total	Int. Total
Veh	1380	5535	1825	53	8793	1808	4961	1867	61	8697	1936	6453	538	44	8971	2252	5797	1043	102	9194	35655
% Veh	99.2	98.9	98	96.4	98.8	95.5	98.9	97.9	87.1	97.9	97.5	98.4	99.1	84.6	98.2	96.8	98	97.3	97.1	97.6	98.1
Trucks	10	59	38	2	109	38	54	40	9	141	33	104	5	8	150	52	117	29	3	201	601
% Trucks	0.7	1.1	2	3.6	1.2	2	1.1	2.1	12.9	1.6	1.7	1.6	0.9	15.4	1.6	2.2	2	2.7	2.9	2.1	1.7
U-Turns	1	0	0	0	1	47	1	0	0	48	17	0	0	0	17	23	1	0	0	24	90
% U-Turns	0.1	0	0	0	0	2.5	0	0	0	0.5	0.9	0	0	0	0.2	1	0	0	0	0.3	0.2

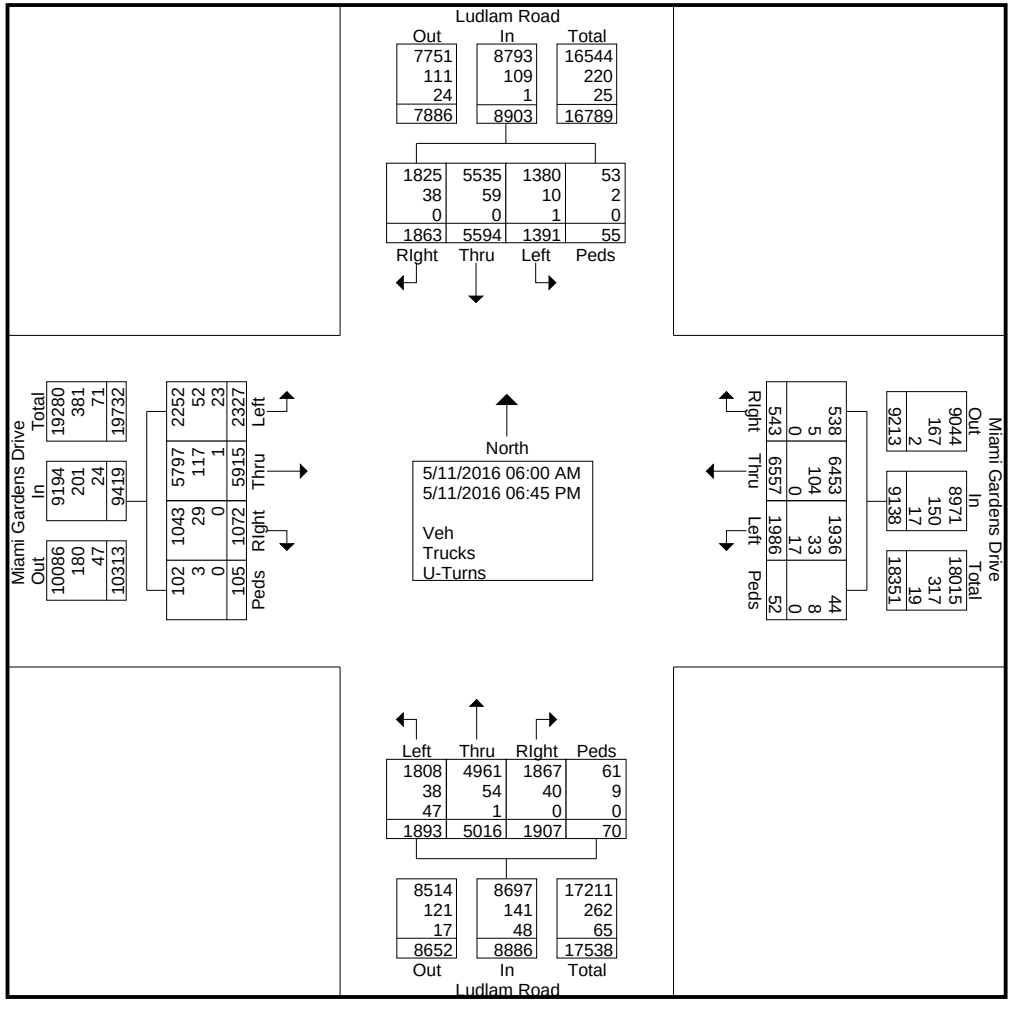

Miami Gardens Drive & Ludlam Road

File Name : Miami Gardens Drive & Ludlam Road
Site Code : 00000000
Start Date : 5/11/2016
Page No : 3

	Ludlam Road Southbound					Ludlam Road Northbound					Miami Gardens Drive Westbound					Miami Gardens Drive Eastbound					
Start Time	Left	Thru	RIght	Peds/Bike	App. Total	Left	Thru	RIght	Peds/Bike	App. Total	Left	Thru	RIght	Peds/Bike	App. Total	Left	Thru	RIght	Peds/Bike	App. Total	Int. Total
Peak Hour Analysis From 06:00 AM to 08:45 AM - Peak 1 of 1																					
Peak Hour for Entire Intersection Begins at 07:15 AM																					
07:15 AM	42	192	49	0	283	**73**	215	**82**	0	**370**	**77**	248	20	0	**345**	**67**	**311**	38	2	**418**	1416
07:30 AM	56	**220**	68	1	345	52	**219**	73	0	344	52	**273**	18	0	343	54	281	**51**	**6**	392	**1424**
07:45 AM	**73**	199	72	0	344	37	203	59	2	301	55	246	25	1	327	64	228	31	0	323	1295
08:00 AM	60	219	**84**	**6**	**369**	67	185	78	**13**	343	33	215	**28**	**4**	280	56	269	24	4	353	1345
Total Volume	231	830	273	7	1341	229	822	292	15	1358	217	982	91	5	1295	241	1089	144	12	1486	5480
% App. Total	17.2	61.9	20.4	0.5		16.9	60.5	21.5	1.1		16.8	75.8	7	0.4		16.2	73.3	9.7	0.8		
PHF	.791	.943	.813	.292	.909	.784	.938	.890	.288	.918	.705	.899	.813	.313	.938	.899	.875	.706	.500	.889	.962

Miami Gardens Drive & Ludlam Road

File Name : Miami Gardens Drive & Ludlam Road
Site Code : 00000000
Start Date : 5/11/2016
Page No : 4

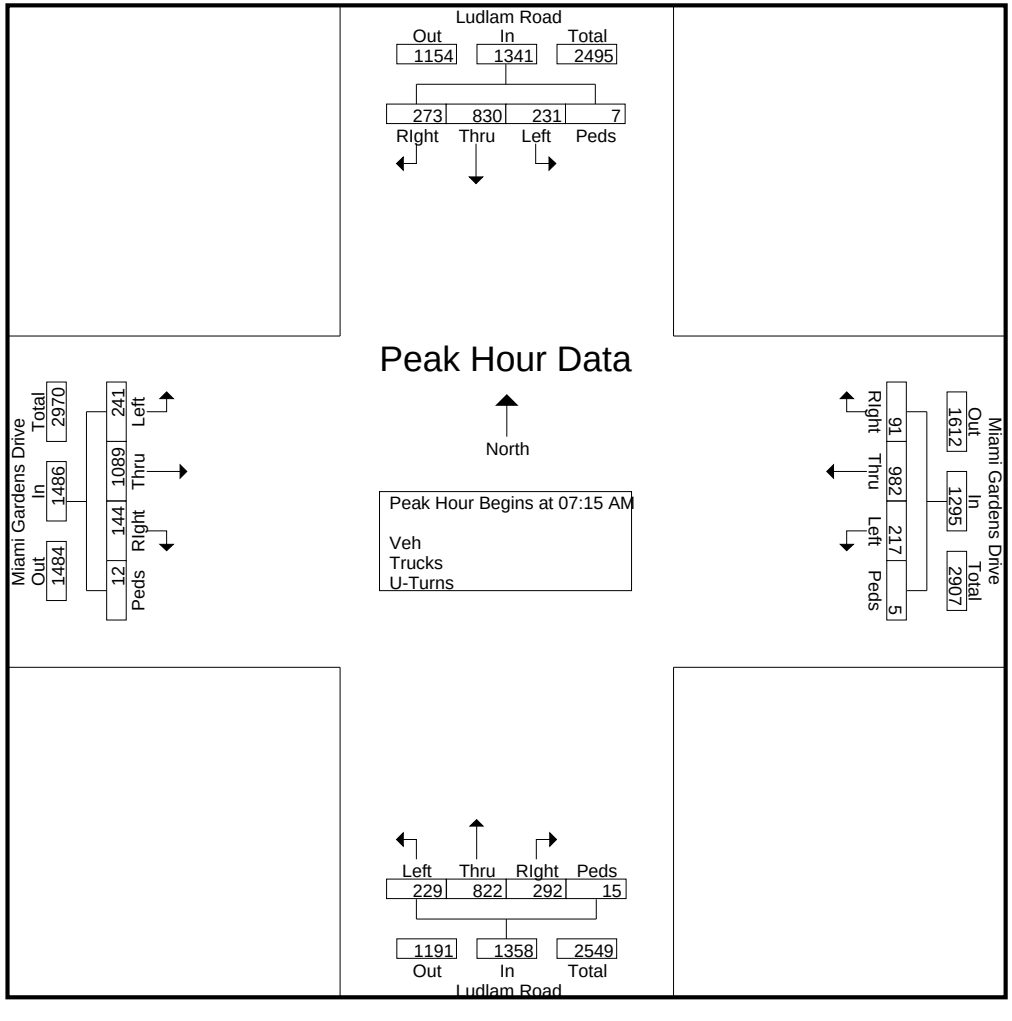

Miami Gardens Drive & Ludlam Road

File Name : Miami Gardens Drive & Ludlam Road
Site Code : 00000000
Start Date : 5/11/2016

	Ludlam Road Southbound					Ludlam Road Northbound					Miami Gardens Drive Westbound					Miami Gardens Drive Eastbound					
Start Time	Left	Thru	RIght	Peds/Bike	App. Total	Left	Thru	RIght	Peds/Bike	App. Total	Left	Thru	RIght	Peds/Bike	App. Total	Left	Thru	RIght	Peds/Bike	App. Total	Int. Total
Peak Hour Analysis From 03:00 PM to 06:45 PM - Peak 1 of 1																					
Peak Hour for Entire Intersection Begins at 05:30 PM																					
05:30 PM	**58**	231	78	**7**	**374**	72	208	**81**	0	361	88	301	19	2	410	105	221	36	**1**	363	1508
05:45 PM	50	**235**	**88**	0	373	90	**223**	62	0	375	78	311	17	2	408	116	218	31	0	365	1521
06:00 PM	55	233	62	1	351	91	223	73	**2**	**389**	**114**	305	23	**4**	446	**117**	**263**	29	0	**409**	**1595**
06:15 PM	42	231	63	1	337	**94**	201	79	1	375	107	**320**	**27**	3	**457**	112	214	**41**	0	367	1536
Total Volume	205	930	291	9	1435	347	855	295	3	1500	387	1237	86	11	1721	450	916	137	1	1504	6160
% App. Total	14.3	64.8	20.3	0.6		23.1	57	19.7	0.2		22.5	71.9	5	0.6		29.9	60.9	9.1	0.1		
PHF	.884	.989	.827	.321	.959	.923	.959	.910	.375	.964	.849	.966	.796	.688	.941	.962	.871	.835	.250	.919	.966

Miami Gardens Drive & Ludlam Road

File Name : Miami Gardens Drive & Ludlam Road
Site Code : 00000000
Start Date : 5/11/2016
Page No : 6

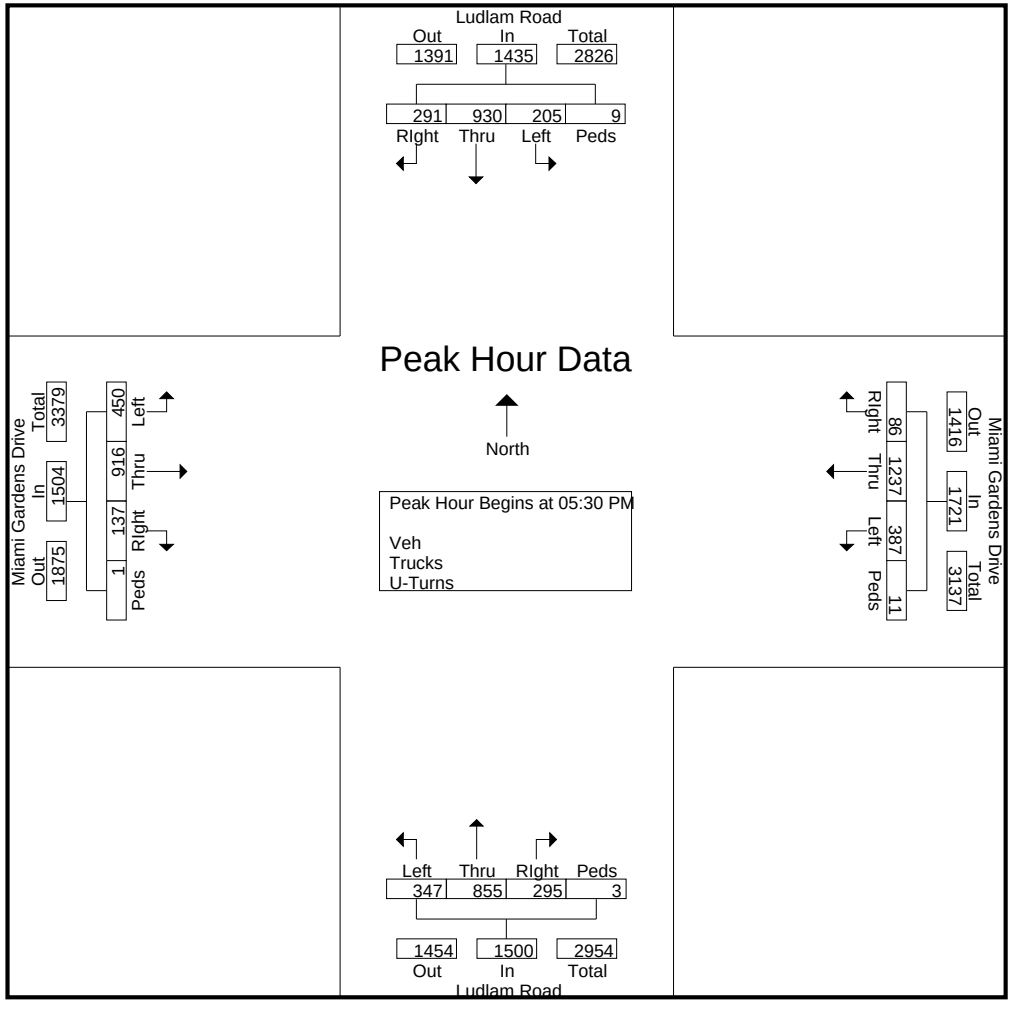

Miami Gardens Drive & NW 62nd Avenue

File Name : Miami Gardens Drive & NW 62nd Avenue
Site Code : 00000000
Start Date : 5/11/2016
Page No : 1

Groups Printed- Trucks

	NW 62nd Avenue Southbound					NW 62nd Avenue Northbound					Miami Gardens Drive Westbound					Miami Gardens Drive Eastbound					
Start Time	Left	Thru	RIght	Bikes	App. Total	Left	Thru	RIght	Bikes	App. Total	Left	Thru	RIght	Bikes	App. Total	Left	Thru	RIght	Bikes	App. Total	Int. Total
06:00 AM	0	0	0	0	0	0	0	0	0	0	0	2	0	0	2	0	2	0	1	3	5
06:15 AM	0	0	2	0	2	1	0	0	0	1	0	7	0	1	8	0	8	0	0	8	19
06:30 AM	2	0	1	1	4	0	0	0	0	0	0	2	3	0	5	0	7	2	0	9	18
06:45 AM	0	1	3	0	4	1	1	0	0	2	0	6	2	0	8	1	6	0	0	7	21
Total	2	1	6	1	10	2	1	0	0	3	0	17	5	1	23	1	23	2	1	27	63
07:00 AM	1	0	0	0	1	0	0	0	0	0	0	2	0	0	2	2	4	0	0	6	9
07:15 AM	0	0	2	2	4	0	0	1	0	1	0	6	1	0	7	1	5	0	0	6	18
07:30 AM	1	0	0	0	1	0	0	0	0	0	0	5	3	0	8	0	8	0	0	8	17
07:45 AM	1	1	5	0	7	1	0	0	1	2	0	6	0	0	6	0	3	1	0	4	19
Total	3	1	7	2	13	1	0	1	1	3	0	19	4	0	23	3	20	1	0	24	63
08:00 AM	0	2	1	0	3	1	0	0	1	2	0	1	2	0	3	0	4	0	0	4	12
08:15 AM	1	0	4	0	5	2	0	0	1	3	0	6	1	0	7	2	6	0	0	8	23
08:30 AM	1	0	0	0	1	0	0	0	0	0	0	4	1	1	6	0	3	0	0	3	10
08:45 AM	0	0	1	0	1	0	0	0	0	0	0	5	2	0	7	1	4	0	0	5	13
Total	2	2	6	0	10	3	0	0	2	5	0	16	6	1	23	3	17	0	0	20	58
*** BREAK ***																					
03:00 PM	1	0	0	0	1	0	0	0	0	0	0	0	0	0	0	1	8	0	0	9	10
03:15 PM	0	0	2	0	2	0	2	0	0	2	0	4	2	0	6	3	4	0	0	7	17
03:30 PM	0	0	1	0	1	2	0	0	0	2	0	4	0	0	4	0	7	0	0	7	14
03:45 PM	0	0	0	1	1	0	0	0	1	1	0	1	0	0	1	2	5	0	0	7	10
Total	1	0	3	1	5	2	2	0	1	5	0	9	2	0	11	6	24	0	0	30	51
04:00 PM	1	0	0	0	1	0	0	0	0	0	0	1	1	0	2	1	4	0	0	5	8
04:15 PM	4	1	1	0	6	2	0	0	0	2	0	4	0	2	6	2	11	0	0	13	27
04:30 PM	1	0	0	0	1	1	0	0	0	1	0	2	1	0	3	3	5	0	1	9	14
04:45 PM	1	0	0	0	1	0	0	0	0	0	0	2	0	0	2	1	2	0	0	3	6
Total	7	1	1	0	9	3	0	0	0	3	0	9	2	2	13	7	22	0	1	30	55
05:00 PM	0	0	0	0	0	0	0	0	1	1	0	2	0	0	2	0	2	0	0	2	5
05:15 PM	0	0	0	0	0	0	0	1	0	1	0	1	2	0	3	0	1	0	0	1	5
05:30 PM	0	0	0	1	1	0	0	0	0	0	0	2	0	0	2	0	4	0	0	4	7
05:45 PM	0	0	0	0	0	0	0	0	0	0	0	2	1	0	3	1	2	0	0	3	6
Total	0	0	0	1	1	0	0	1	1	2	0	7	3	0	10	1	9	0	0	10	23
06:00 PM	0	0	0	0	0	1	1	0	0	2	0	1	0	0	1	0	3	0	0	3	6
06:15 PM	0	0	0	0	0	0	0	0	0	0	0	2	1	0	3	0	0	0	1	1	4
06:30 PM	0	0	0	0	0	0	0	0	0	0	0	1	1	0	2	0	2	0	0	2	4
06:45 PM	0	0	0	0	0	0	0	0	1	1	0	3	2	0	5	0	3	0	0	3	9
Total	0	0	0	0	0	1	1	0	1	3	0	7	4	0	11	0	8	0	1	9	23
Grand Total	15	5	23	5	48	12	4	2	6	24	0	84	26	4	114	21	123	3	3	150	336
Apprch %	31.2	10.4	47.9	10.4		50	16.7	8.3	25		0	73.7	22.8	3.5		14	82	2	2		
Total %	4.5	1.5	6.8	1.5	14.3	3.6	1.2	0.6	1.8	7.1	0	25	7.7	1.2	33.9	6.2	36.6	0.9	0.9	44.6	

Miami Gardens Drive & NW 62nd Avenue

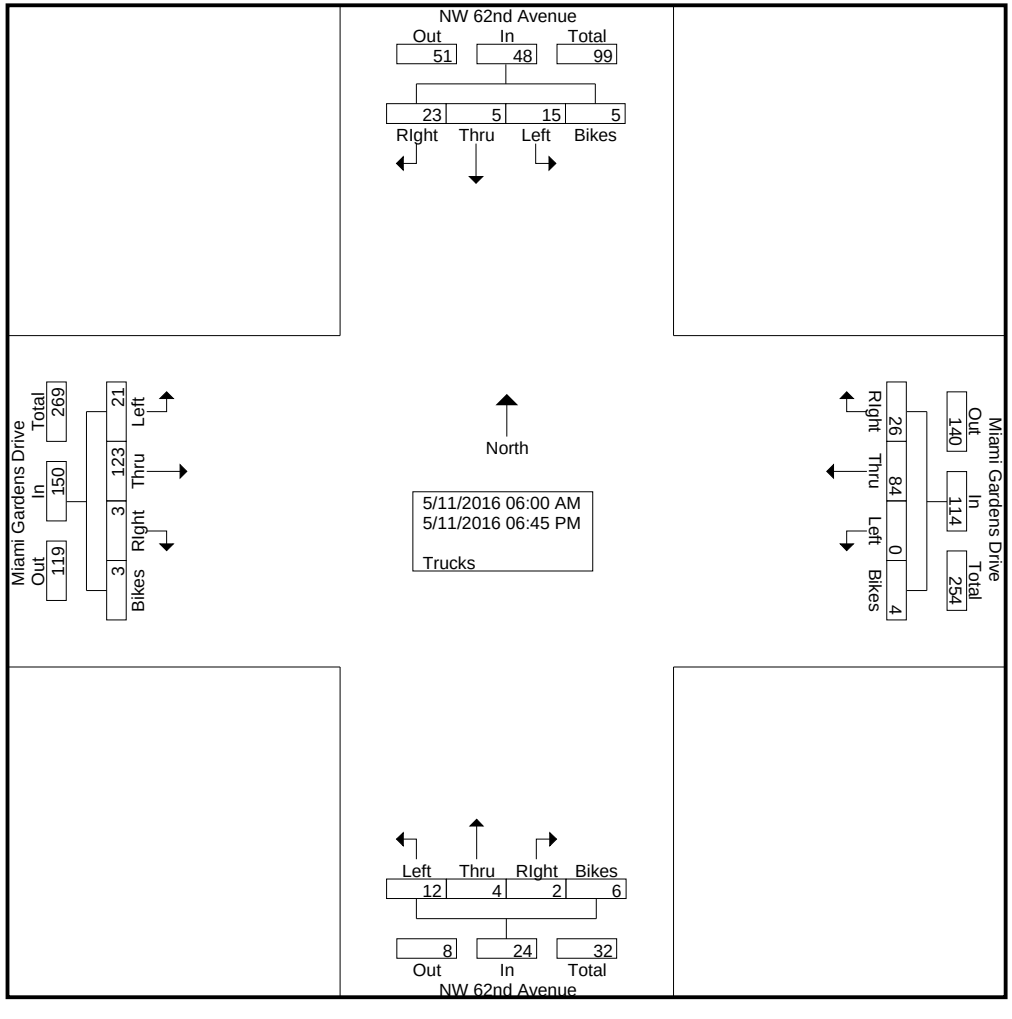

Miami Gardens Drive & NW 62nd Avenue

File Name : Miami Gardens Drive & NW 62nd Avenue
Site Code : 00000000
Start Date : 5/11/2016
Page No : 3

	NW 62nd Avenue Southbound					NW 62nd Avenue Northbound					Miami Gardens Drive Westbound					Miami Gardens Drive Eastbound					
Start Time	Left	Thru	RIght	Bikes	App. Total	Left	Thru	RIght	Bikes	App. Total	Left	Thru	RIght	Bikes	App. Total	Left	Thru	RIght	Bikes	App. Total	Int. Total
Peak Hour Analysis From 06:00 AM to 08:45 AM - Peak 1 of 1																					
Peak Hour for Entire Intersection Begins at 07:30 AM																					
07:30 AM	**1**	0	0	0	1	0	0	0	0	0	0	5	**3**	0	**8**	0	**8**	0	0	**8**	17
07:45 AM	1	1	**5**	0	**7**	1	0	0	**1**	2	0	**6**	0	0	6	0	3	**1**	0	4	19
08:00 AM	0	**2**	1	0	3	1	0	0	1	2	0	1	2	0	3	0	4	0	0	4	12
08:15 AM	1	0	4	0	5	**2**	0	0	1	**3**	0	6	1	0	7	**2**	6	0	0	8	**23**
Total Volume	3	3	10	0	16	4	0	0	3	7	0	18	6	0	24	2	21	1	0	24	71
% App. Total	18.8	18.8	62.5	0		57.1	0	0	42.9		0	75	25	0		8.3	87.5	4.2	0		
PHF	.750	.375	.500	.000	.571	.500	.000	.000	.750	.583	.000	.750	.500	.000	.750	.250	.656	.250	.000	.750	.772

Miami Gardens Drive & NW 62nd Avenue

File Name : Miami Gardens Drive & NW 62nd Avenue
Site Code : 00000000
Start Date : 5/11/2016
Page No : 4

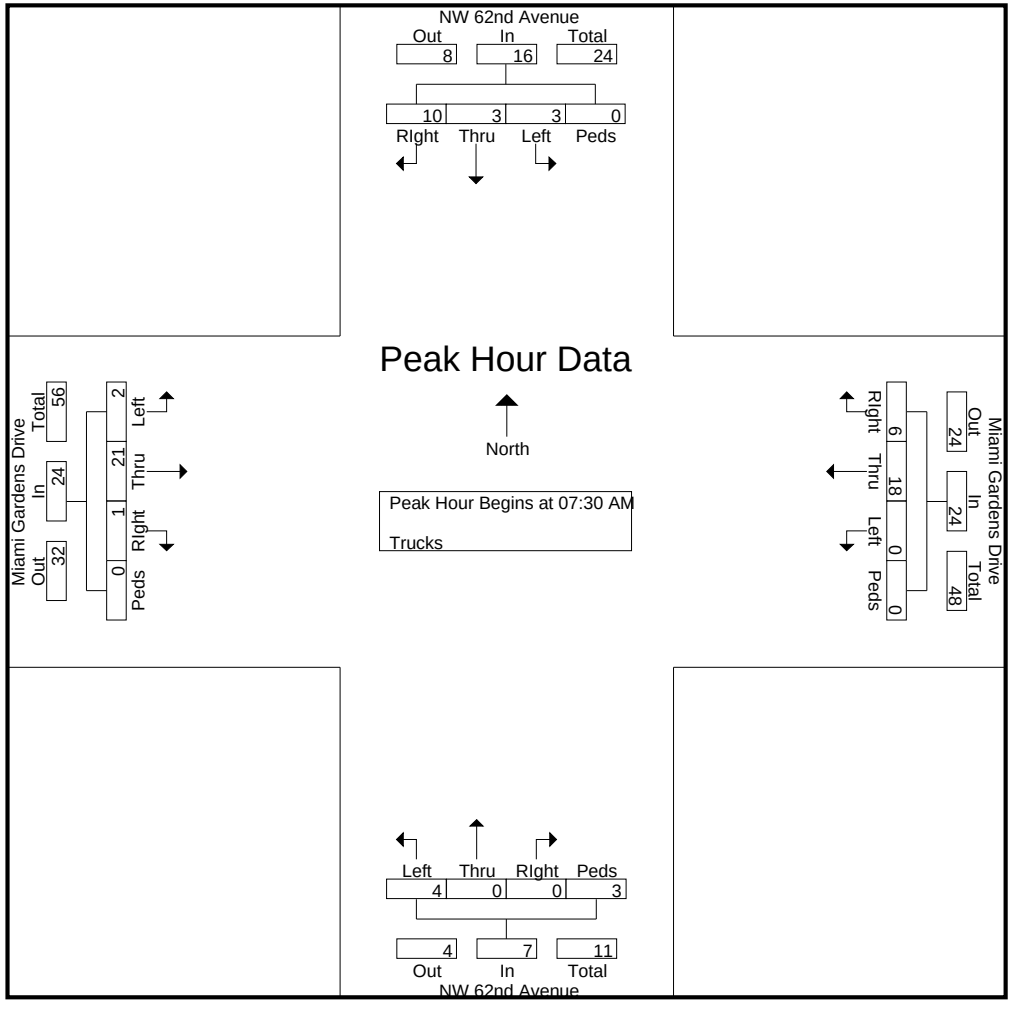

Miami Gardens Drive & NW 62nd Avenue

File Name : Miami Gardens Drive & NW 62nd Avenue
Site Code : 00000000
Start Date : 5/11/2016
Page No : 5

	NW 62nd Avenue Southbound					NW 62nd Avenue Northbound					Miami Gardens Drive Westbound					Miami Gardens Drive Eastbound					
Start Time	Left	Thru	RIght	Bikes	App. Total	Left	Thru	RIght	Bikes	App. Total	Left	Thru	RIght	Bikes	App. Total	Left	Thru	RIght	Bikes	App. Total	Int. Total
Peak Hour Analysis From 03:00 PM to 06:45 PM - Peak 1 of 1																					
Peak Hour for Entire Intersection Begins at 03:30 PM																					
03:30 PM	0	0	**1**	0	1	**2**	0	0	0	**2**	0	**4**	0	0	4	0	7	0	0	7	14
03:45 PM	0	0	0	**1**	1	0	0	0	**1**	1	0	1	0	0	1	**2**	5	0	0	7	10
04:00 PM	1	0	0	0	1	0	0	0	0	0	0	1	**1**	0	2	1	4	0	0	5	8
04:15 PM	**4**	**1**	1	0	**6**	2	0	0	0	2	0	4	0	**2**	**6**	2	**11**	0	0	**13**	**27**
Total Volume	5	1	2	1	9	4	0	0	1	5	0	10	1	2	13	5	27	0	0	32	59
% App. Total	55.6	11.1	22.2	11.1		80	0	0	20		0	76.9	7.7	15.4		15.6	84.4	0	0		
PHF	.313	.250	.500	.250	.375	.500	.000	.000	.250	.625	.000	.625	.250	.250	.542	.625	.614	.000	.000	.615	.546

Miami Gardens Drive & NW 62nd Avenue

File Name : Miami Gardens Drive & NW 62nd Avenue
Site Code : 00000000
Start Date : 5/11/2016
Page No : 6

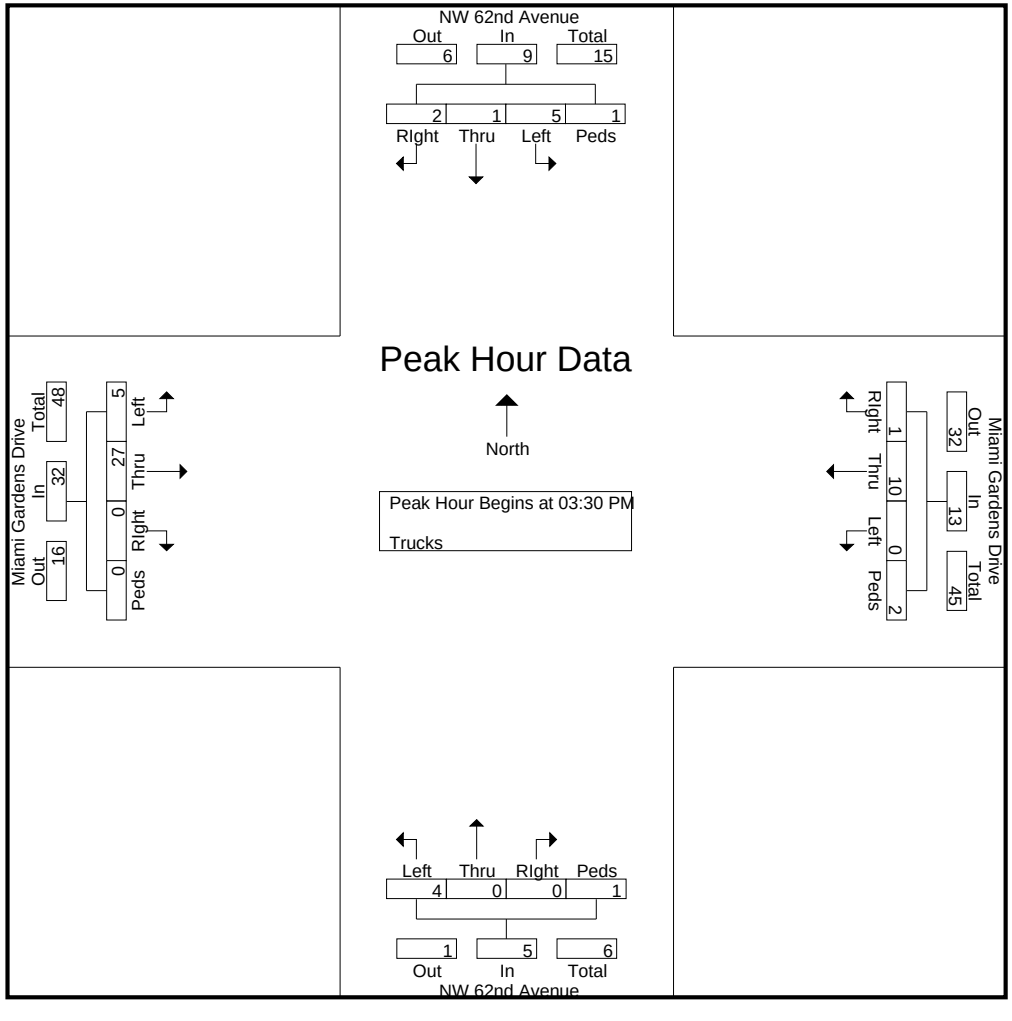

Miami Gardens Drive & NW 62nd Avenue

File Name : Miami Gardens Drive & NW 62nd Avenue
Site Code : 00000000
Start Date : 5/11/2016
Page No : 1

Groups Printed- Turns

	NW 62nd Avenue Southbound					NW 62nd Avenue Northbound					Miami Gardens Drive Westbound					Miami Gardens Drive Eastbound					
Start Time	Left	Thru	RIght	Peds/Bike	App. Total	Left	Thru	RIght	Peds/Bike	App. Total	Left	Thru	RIght	Peds/Bike	App. Total	Left	Thru	RIght	Peds/Bike	App. Total	Int. Total
*** BREAK ***																					
04:00 PM	0	0	0	0	0	0	0	0	0	0	0	0	0	0	0	1	0	0	0	1	1
*** BREAK ***																					
04:30 PM	0	0	0	0	0	0	0	0	0	0	0	0	0	0	0	1	0	0	0	1	1
*** BREAK ***																					
Total	0	0	0	0	0	0	0	0	0	0	0	0	0	0	0	2	0	0	0	2	2
*** BREAK ***																					
Grand Total	0	0	0	0	0	0	0	0	0	0	0	0	0	0	0	2	0	0	0	2	2
Apprch %	0	0	0	0		0	0	0	0		0	0	0	0		100	0	0	0		
Total %	0	0	0	0	0	0	0	0	0	0	0	0	0	0	0	100	0	0	0	100	

Miami Gardens Drive & NW 62nd Avenue

File Name : Miami Gardens Drive & NW 62nd Avenue
Site Code : 00000000
Start Date : 5/11/2016
Page No : 2

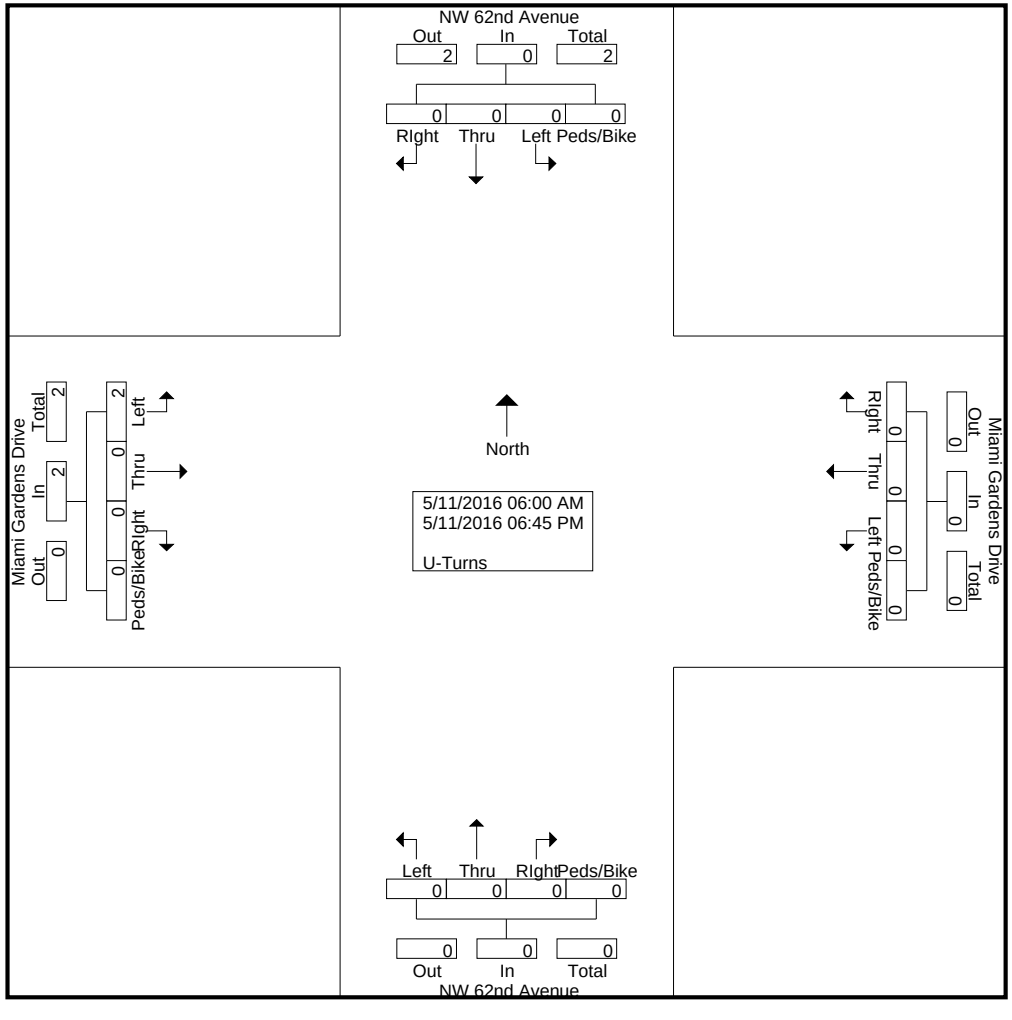

Miami Gardens Drive & NW 62nd Avenue

File Name : Miami Gardens Drive & NW 62nd Avenue
Site Code : 00000000
Start Date : 5/11/2016
Page No : 3

	NW 62nd Avenue Southbound					NW 62nd Avenue Northbound					Miami Gardens Drive Westbound					Miami Gardens Drive Eastbound					
Start Time	Left	Thru	RIght	Peds/Bike	App. Total	Left	Thru	RIght	Peds/Bike	App. Total	Left	Thru	RIght	Peds/Bike	App. Total	Left	Thru	RIght	Peds/Bike	App. Total	Int. Total
Peak Hour Analysis From 06:00 AM to 08:45 AM - Peak 1 of 1																					
Peak Hour for Entire Intersection Begins at 06:00 AM																					
06:00 AM	0	0	0	0	0	0	0	0	0	0	0	0	0	0	0	0	0	0	0	0	0
06:15 AM	0	0	0	0	0	0	0	0	0	0	0	0	0	0	0	0	0	0	0	0	0
06:30 AM	0	0	0	0	0	0	0	0	0	0	0	0	0	0	0	0	0	0	0	0	0
06:45 AM	0	0	0	0	0	0	0	0	0	0	0	0	0	0	0	0	0	0	0	0	0
Total Volume	0	0	0	0	0	0	0	0	0	0	0	0	0	0	0	0	0	0	0	0	0
% App. Total	0	0	0	0		0	0	0	0		0	0	0	0		0	0	0	0		
PHF	.000	.000	.000	.000	.000	.000	.000	.000	.000	.000	.000	.000	.000	.000	.000	.000	.000	.000	.000	.000	.000

Miami Gardens Drive & NW 62nd Avenue

File Name : Miami Gardens Drive & NW 62nd Avenue
Site Code : 00000000
Start Date : 5/11/2016
Page No : 4

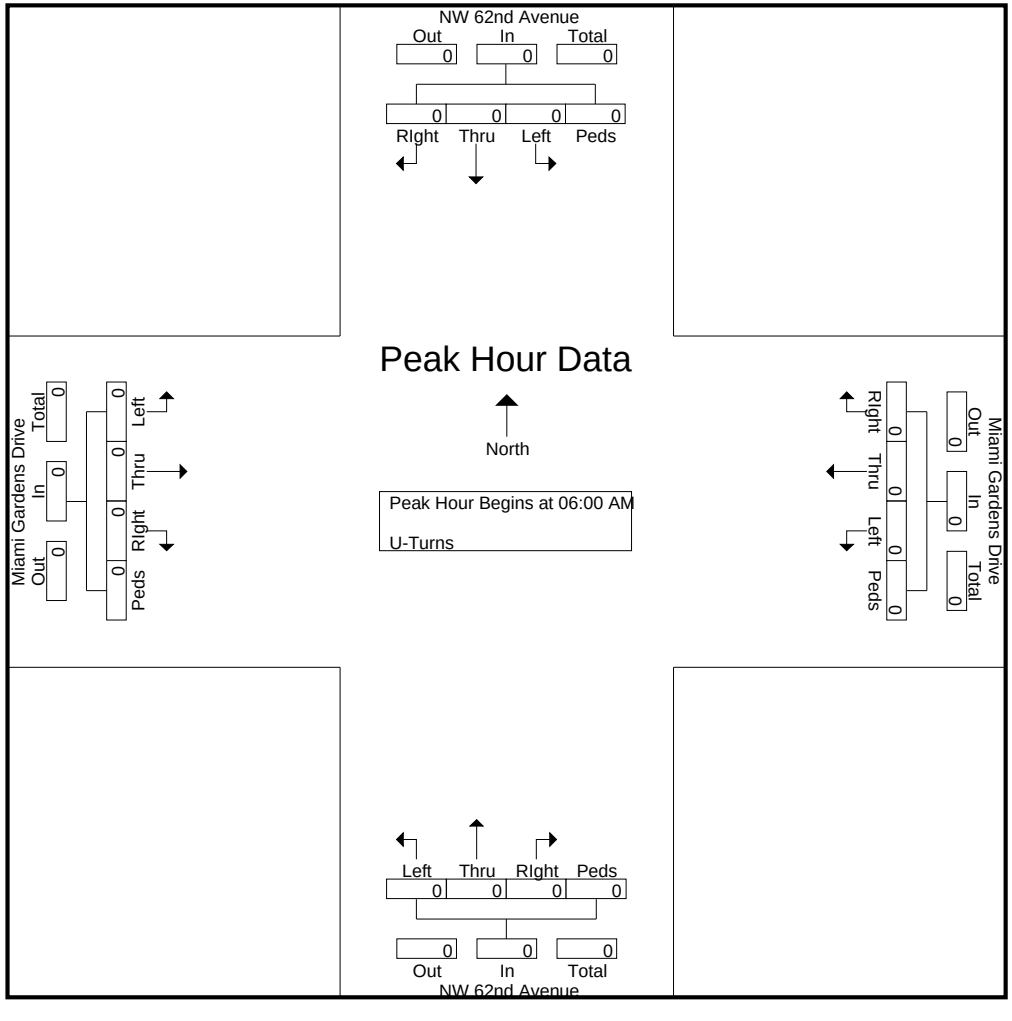

Miami Gardens Drive & NW 62nd Avenue

File Name : Miami Gardens Drive & NW 62nd Avenue
Site Code : 00000000
Start Date : 5/11/2016
Page No : 5

	NW 62nd Avenue Southbound					NW 62nd Avenue Northbound					Miami Gardens Drive Westbound					Miami Gardens Drive Eastbound					
Start Time	Left	Thru	RIght	Peds/Bike	App. Total	Left	Thru	RIght	Peds/Bike	App. Total	Left	Thru	RIght	Peds/Bike	App. Total	Left	Thru	RIght	Peds/Bike	App. Total	Int. Total
Peak Hour Analysis From 03:00 PM to 06:45 PM - Peak 1 of 1																					
Peak Hour for Entire Intersection Begins at 03:45 PM																					
03:45 PM	0	0	0	0	0	0	0	0	0	0	0	0	0	0	0	0	0	0	0	0	0
04:00 PM	0	0	0	0	0	0	0	0	0	0	0	0	0	0	0	**1**	0	0	0	**1**	**1**
04:15 PM	0	0	0	0	0	0	0	0	0	0	0	0	0	0	0	0	0	0	0	0	0
04:30 PM	0	0	0	0	0	0	0	0	0	0	0	0	0	0	0	1	0	0	0	1	1
Total Volume	0	0	0	0	0	0	0	0	0	0	0	0	0	0	0	2	0	0	0	2	2
% App. Total	0	0	0	0		0	0	0	0		0	0	0	0		100	0	0	0		
PHF	.000	.000	.000	.000	.000	.000	.000	.000	.000	.000	.000	.000	.000	.000	.000	.500	.000	.000	.000	.500	.500

Miami Gardens Drive & NW 62nd Avenue

File Name : Miami Gardens Drive & NW 62nd Avenue
Site Code : 00000000
Start Date : 5/11/2016
Page No : 6

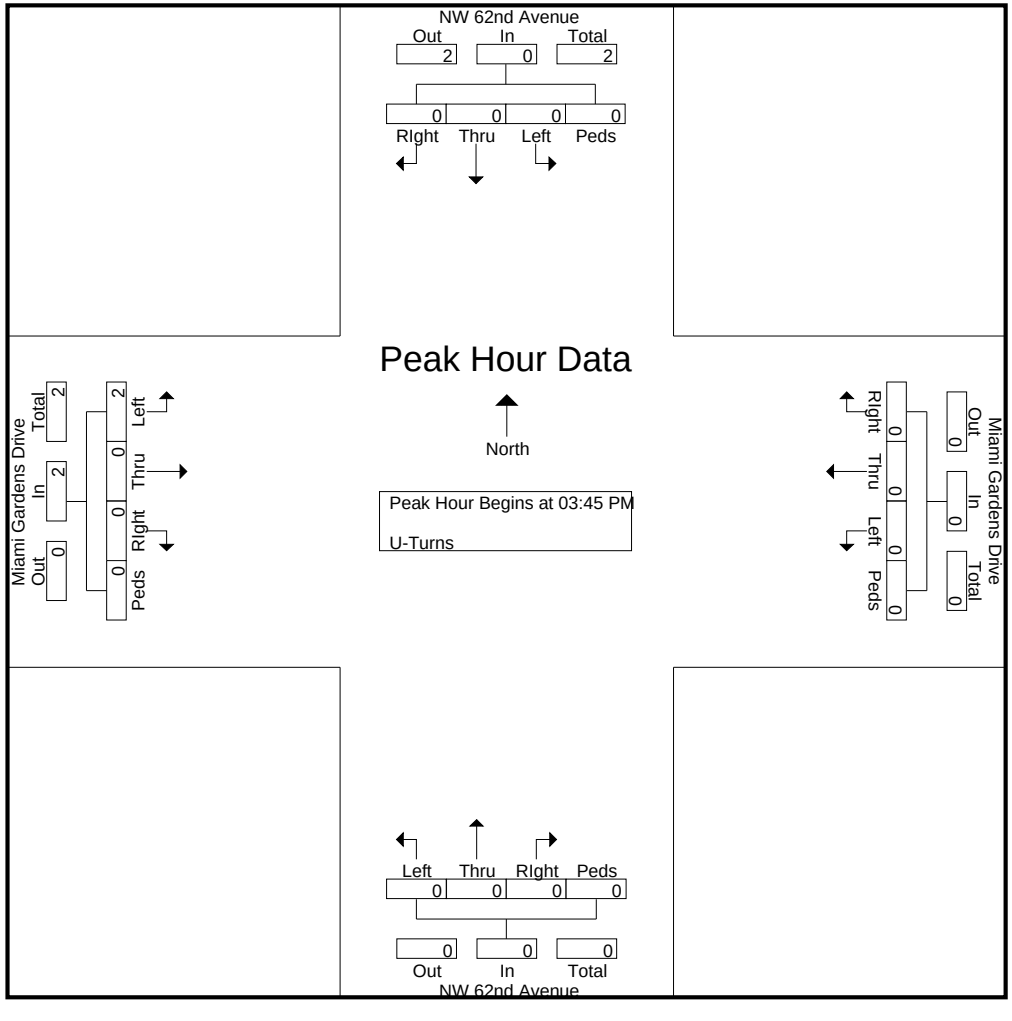

Miami Gardens Drive & NW 62nd Avenue

File Name : Miami Gardens Drive & NW 62nd Avenue
Site Code : 00000000
Start Date : 5/11/2016
Page No : 1

Groups Printed- Veh - Trucks - Turns

	NW 62nd Avenue Southbound					NW 62nd Avenue Northbound					Miami Gardens Drive Westbound					Miami Gardens Drive Eastbound					
Start Time	Left	Thru	RIght	Peds/Bike	App. Total	Left	Thru	RIght	Peds/Bike	App. Total	Left	Thru	RIght	Peds/Bike	App. Total	Left	Thru	RIght	Peds/Bike	App. Total	Int. Total
06:00 AM	10	3	17	0	30	4	0	1	0	5	0	73	1	0	74	6	120	1	1	128	237
06:15 AM	17	2	30	10	59	4	1	1	0	6	15	135	5	2	157	2	173	1	0	176	398
06:30 AM	31	5	42	4	82	14	3	0	0	17	22	172	7	0	201	11	253	3	0	267	567
06:45 AM	38	7	73	0	118	19	3	0	1	23	0	212	11	0	223	25	317	6	0	348	712
Total	96	17	162	14	289	41	7	2	1	51	37	592	24	2	655	44	863	11	1	919	1914
07:00 AM	46	18	99	1	164	35	4	0	0	39	0	217	22	2	241	34	345	3	0	382	826
07:15 AM	58	21	77	2	158	16	3	3	1	23	0	237	22	0	259	29	420	9	0	458	898
07:30 AM	76	26	57	0	159	15	15	1	0	31	0	257	29	0	286	29	389	4	2	424	900
07:45 AM	80	23	76	0	179	20	9	1	1	31	0	236	29	1	266	24	351	7	0	382	858
Total	260	88	309	3	660	86	31	5	2	124	0	947	102	3	1052	116	1505	23	2	1646	3482
08:00 AM	54	22	73	1	150	32	15	0	2	49	0	172	46	2	220	21	364	11	0	396	815
08:15 AM	53	19	74	1	147	17	10	1	1	29	0	264	37	0	301	40	331	0	0	371	848
08:30 AM	48	19	54	1	122	12	5	2	1	20	0	212	21	1	234	28	301	11	0	340	716
08:45 AM	27	5	43	1	76	16	3	0	1	20	0	189	18	1	208	45	227	12	0	284	588
Total	182	65	244	4	495	77	33	3	5	118	0	837	122	4	963	134	1223	34	0	1391	2967
*** BREAK ***																					
03:00 PM	21	8	21	1	51	20	10	6	1	37	0	265	30	3	298	54	234	11	3	302	688
03:15 PM	30	3	40	3	76	17	11	0	0	28	0	259	37	0	296	33	263	9	0	305	705
03:30 PM	16	5	37	0	58	31	12	0	2	45	0	275	30	1	306	45	270	10	6	331	740
03:45 PM	15	6	33	3	57	35	8	0	1	44	0	268	29	0	297	47	326	9	0	382	780
Total	82	22	131	7	242	103	41	6	4	154	0	1067	126	4	1197	179	1093	39	9	1320	2913
04:00 PM	25	13	31	3	72	33	7	3	0	43	1	230	39	0	270	50	329	11	4	394	779
04:15 PM	26	8	26	2	62	39	12	0	0	51	0	292	32	2	326	61	315	21	0	397	836
04:30 PM	24	3	30	1	58	41	10	2	0	53	0	233	28	0	261	55	216	20	1	292	664
04:45 PM	25	10	30	6	71	33	11	0	1	45	0	268	31	0	299	41	276	7	2	326	741
Total	100	34	117	12	263	146	40	5	1	192	1	1023	130	2	1156	207	1136	59	7	1409	3020
05:00 PM	28	5	30	2	65	33	13	2	1	49	0	321	47	0	368	72	254	13	0	339	821
05:15 PM	25	9	50	1	85	23	20	1	0	44	0	316	43	0	359	60	294	13	0	367	855
05:30 PM	32	10	37	1	80	51	22	1	1	75	0	304	30	0	334	57	303	12	0	372	861
05:45 PM	22	7	41	2	72	44	14	0	0	58	0	306	41	2	349	37	296	12	0	345	824
Total	107	31	158	6	302	151	69	4	2	226	0	1247	161	2	1410	226	1147	50	0	1423	3361
06:00 PM	16	7	58	2	83	39	19	3	0	61	0	344	47	0	391	55	315	10	1	381	916
06:15 PM	18	5	45	2	70	46	18	3	0	67	0	355	26	1	382	55	292	8	2	357	876
06:30 PM	17	0	41	3	61	38	3	1	0	42	0	334	34	0	368	54	292	11	1	358	829
06:45 PM	20	8	37	3	68	26	9	1	1	37	0	315	30	0	345	36	236	2	0	274	724
Total	71	20	181	10	282	149	49	8	1	207	0	1348	137	1	1486	200	1135	31	4	1370	3345
Grand Total	898	277	1302	56	2533	753	270	33	16	1072	38	7061	802	18	7919	1106	8102	247	23	9478	21002
Apprch %	35.5	10.9	51.4	2.2		70.2	25.2	3.1	1.5		0.5	89.2	10.1	0.2		11.7	85.5	2.6	0.2		
Total %	4.3	1.3	6.2	0.3	12.1	3.6	1.3	0.2	0.1	5.1	0.2	33.6	3.8	0.1	37.7	5.3	38.6	1.2	0.1	45.1	

Miami Gardens Drive & NW 62nd Avenue

File Name : Miami Gardens Drive & NW 62nd Avenue
Site Code : 00000000
Start Date : 5/11/2016
Page No : 2

Groups Printed- Veh - Trucks - Turns

	NW 62nd Avenue Southbound					NW 62nd Avenue Northbound					Miami Gardens Drive Westbound					Miami Gardens Drive Eastbound					
	Left	Thru	RIght	Peds/Bike	App. Total	Left	Thru	RIght	Peds/Bike	App. Total	Left	Thru	RIght	Peds/Bike	App. Total	Left	Thru	RIght	Peds/Bike	App. Total	Int. Total
Veh	883	272	1279	51	2485	741	266	31	10	1048	38	6977	776	14	7805	1083	7979	244	20	9326	20664
% Veh	98.3	98.2	98.2	91.1	98.1	98.4	98.5	93.9	62.5	97.8	100	98.8	96.8	77.8	98.6	97.9	98.5	98.8	87	98.4	98.4
Trucks	15	5	23	5	48	12	4	2	6	24	0	84	26	4	114	21	123	3	3	150	336
% Trucks	1.7	1.8	1.8	8.9	1.9	1.6	1.5	6.1	37.5	2.2	0	1.2	3.2	22.2	1.4	1.9	1.5	1.2	13	1.6	1.6
U-Turns	0	0	0	0	0	0	0	0	0	0	0	0	0	0	0	2	0	0	0	2	2
% U-Turns	0	0	0	0	0	0	0	0	0	0	0	0	0	0	0	0.2	0	0	0	0	0

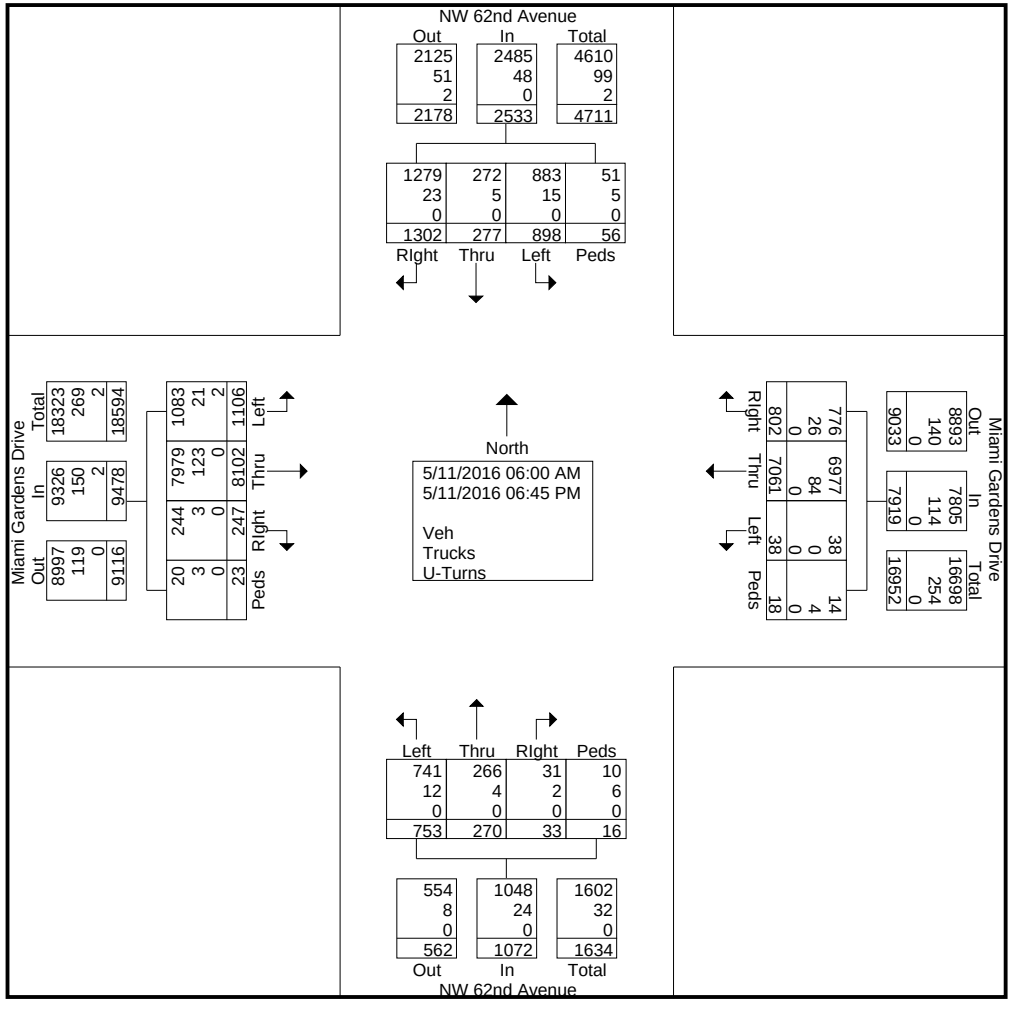

Miami Gardens Drive & NW 62nd Avenue

File Name : Miami Gardens Drive & NW 62nd Avenue
Site Code : 00000000
Start Date : 5/11/2016
Page No : 3

	NW 62nd Avenue Southbound					NW 62nd Avenue Northbound					Miami Gardens Drive Westbound					Miami Gardens Drive Eastbound					
Start Time	Left	Thru	RIght	Peds/Bike	App. Total	Left	Thru	RIght	Peds/Bike	App. Total	Left	Thru	RIght	Peds/Bike	App. Total	Left	Thru	RIght	Peds/Bike	App. Total	Int. Total
Peak Hour Analysis From 06:00 AM to 08:45 AM - Peak 1 of 1																					
Peak Hour for Entire Intersection Begins at 07:00 AM																					
07:00 AM	46	18	**99**	1	164	**35**	4	0	0	**39**	0	217	22	**2**	241	**34**	345	3	0	382	826
07:15 AM	58	21	77	**2**	158	16	3	**3**	**1**	23	0	237	22	0	259	29	**420**	**9**	0	**458**	898
07:30 AM	76	**26**	57	0	159	15	**15**	1	0	31	0	**257**	**29**	0	**286**	29	389	4	**2**	424	**900**
07:45 AM	**80**	23	76	0	**179**	20	9	1	1	31	0	236	29	1	266	24	351	7	0	382	858
Total Volume	260	88	309	3	660	86	31	5	2	124	0	947	102	3	1052	116	1505	23	2	1646	3482
% App. Total	39.4	13.3	46.8	0.5		69.4	25	4	1.6		0	90	9.7	0.3		7	91.4	1.4	0.1		
PHF	.813	.846	.780	.375	.922	.614	.517	.417	.500	.795	.000	.921	.879	.375	.920	.853	.896	.639	.250	.898	.967

Miami Gardens Drive & NW 62nd Avenue

File Name : Miami Gardens Drive & NW 62nd Avenue
Site Code : 00000000
Start Date : 5/11/2016
Page No : 4

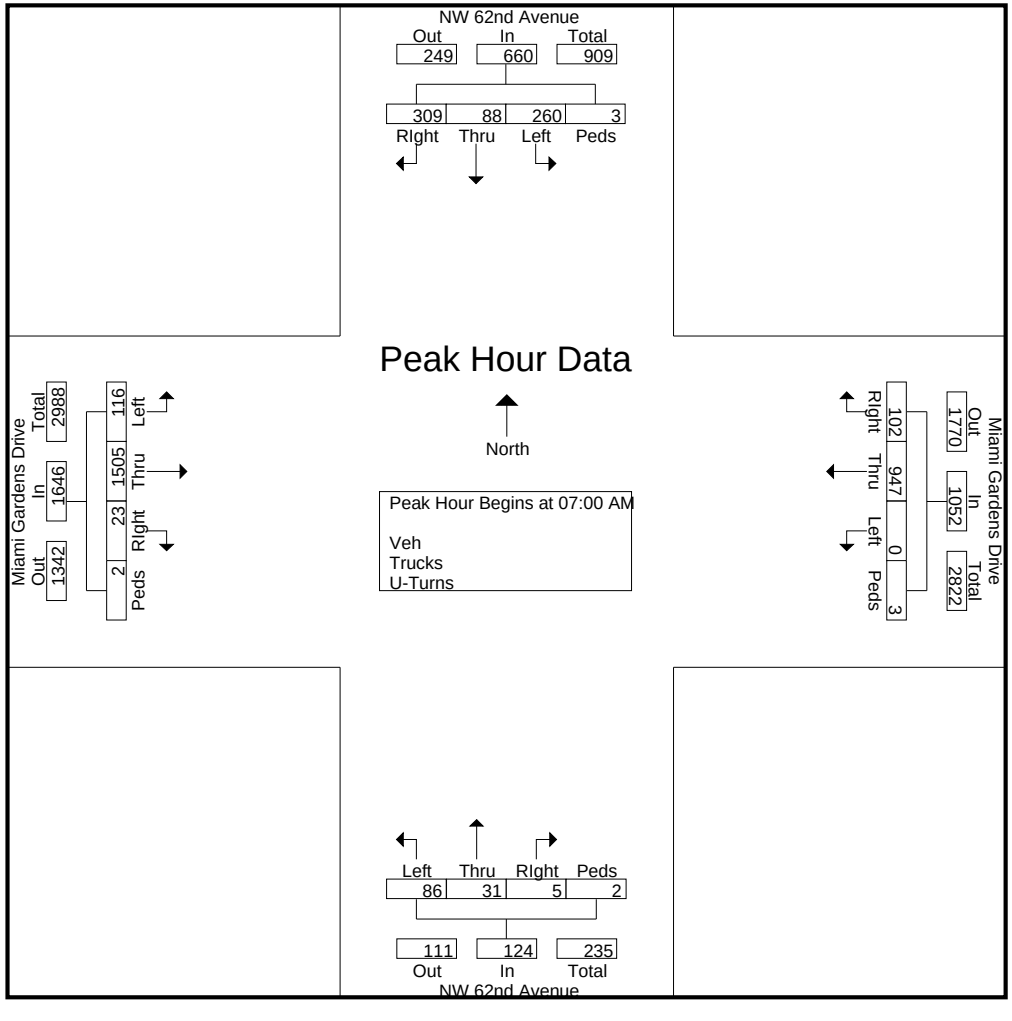

Miami Gardens Drive & NW 62nd Avenue

File Name : Miami Gardens Drive & NW 62nd Avenue
Site Code : 00000000
Start Date : 5/11/2016
Page No : 5

	NW 62nd Avenue Southbound					NW 62nd Avenue Northbound					Miami Gardens Drive Westbound					Miami Gardens Drive Eastbound					
Start Time	Left	Thru	RIght	Peds/Bike	App. Total	Left	Thru	RIght	Peds/Bike	App. Total	Left	Thru	RIght	Peds/Bike	App. Total	Left	Thru	RIght	Peds/Bike	App. Total	Int. Total
Peak Hour Analysis From 03:00 PM to 06:45 PM - Peak 1 of 1																					
Peak Hour for Entire Intersection Begins at 05:30 PM																					
05:30 PM	**32**	**10**	37	1	80	**51**	**22**	1	**1**	**75**	0	304	30	0	334	**57**	303	**12**	0	372	861
05:45 PM	22	7	41	**2**	72	44	14	0	0	58	0	306	41	**2**	349	37	296	12	0	345	824
06:00 PM	16	7	**58**	2	**83**	39	19	**3**	0	61	0	344	**47**	0	**391**	55	**315**	10	1	**381**	**916**
06:15 PM	18	5	45	2	70	46	18	3	0	67	0	**355**	26	1	382	55	292	8	**2**	357	876
Total Volume	88	29	181	7	305	180	73	7	1	261	0	1309	144	3	1456	204	1206	42	3	1455	3477
% App. Total	28.9	9.5	59.3	2.3		69	28	2.7	0.4		0	89.9	9.9	0.2		14	82.9	2.9	0.2		
PHF	.688	.725	.780	.875	.919	.882	.830	.583	.250	.870	.000	.922	.766	.375	.931	.895	.957	.875	.375	.955	.949

Miami Gardens Drive & NW 62nd Avenue

File Name : Miami Gardens Drive & NW 62nd Avenue
Site Code : 00000000
Start Date : 5/11/2016
Page No : 6

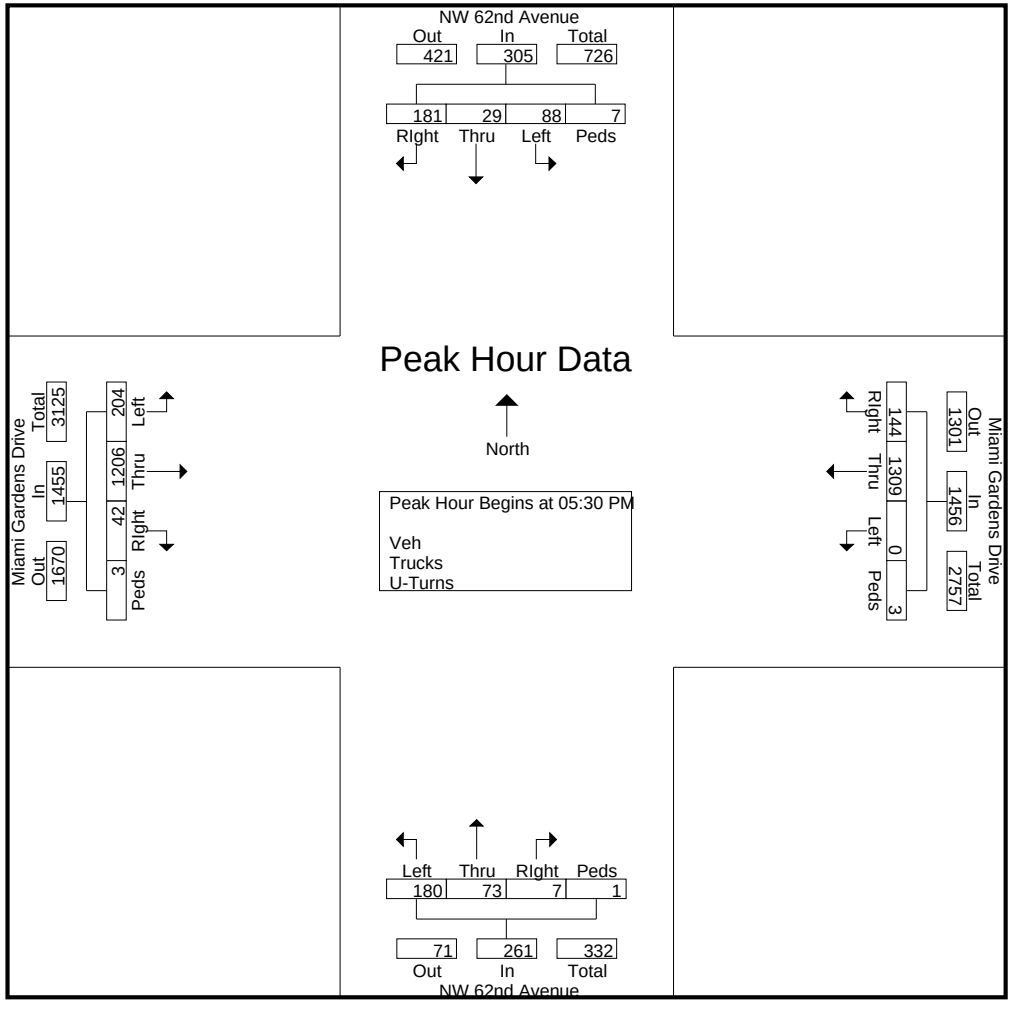

Miami Gardens Drive & NW 59th Avenue

File Name : Miami Gardens Drive & NW 59th Avenue
Site Code : 00000000
Start Date : 5/11/2016
Page No : 1

Groups Printed- Trucks

	NW 59th Avenue Southbound					NW 59th Avenue Northbound					Miami Gardens Drive Westbound					Miami Gardens Drive Eastbound					
Start Time	Left	Thru	RIght	Bikes	App. Total	Left	Thru	RIght	Bikes	App. Total	Left	Thru	RIght	Bikes	App. Total	Left	Thru	RIght	Bikes	App. Total	Int. Total
06:00 AM	0	0	0	0	0	0	0	1	1	2	0	4	0	0	4	0	2	3	1	6	12
06:15 AM	0	0	0	0	0	0	0	2	0	2	0	11	0	0	11	0	8	3	0	11	24
06:30 AM	0	0	0	1	1	0	0	0	1	1	0	5	0	0	5	0	10	0	0	10	17
06:45 AM	0	0	0	0	0	0	0	1	1	2	1	7	0	0	8	0	10	1	0	11	21
Total	0	0	0	1	1	0	0	4	3	7	1	27	0	0	28	0	30	7	1	38	74
07:00 AM	0	0	0	0	0	0	0	1	1	2	0	3	0	0	3	0	8	0	0	8	13
07:15 AM	0	0	0	2	2	0	0	0	0	0	0	7	0	0	7	0	8	0	0	8	17
07:30 AM	0	0	0	0	0	0	0	0	1	1	1	8	0	0	9	0	5	2	0	7	17
07:45 AM	0	0	1	0	1	1	0	0	0	1	0	4	0	0	4	0	7	0	0	7	13
Total	0	0	1	2	3	1	0	1	2	4	1	22	0	0	23	0	28	2	0	30	60
08:00 AM	0	0	1	0	1	0	0	0	0	0	0	2	0	0	2	0	2	1	0	3	6
08:15 AM	0	0	0	0	0	0	0	0	1	1	1	6	0	0	7	0	6	0	0	6	14
08:30 AM	0	0	0	0	0	0	0	1	0	1	1	5	0	0	6	0	4	1	0	5	12
08:45 AM	0	0	0	0	0	0	0	0	0	0	0	7	0	0	7	0	5	1	0	6	13
Total	0	0	1	0	1	0	0	1	1	2	2	20	0	0	22	0	17	3	0	20	45
*** BREAK ***																					
03:00 PM	0	0	0	1	1	0	0	0	0	0	0	4	0	0	4	0	5	0	0	5	10
03:15 PM	0	0	0	0	0	0	0	0	0	0	0	6	0	0	6	0	3	2	0	5	11
03:30 PM	0	0	0	1	1	0	0	0	1	1	0	1	0	1	2	0	4	2	0	6	10
03:45 PM	0	0	0	0	0	0	0	1	0	1	0	5	0	0	5	0	4	1	0	5	11
Total	0	0	0	2	2	0	0	1	1	2	0	16	0	1	17	0	16	5	0	21	42
04:00 PM	0	0	0	2	2	0	0	0	0	0	1	5	0	0	6	0	7	3	0	10	18
04:15 PM	0	0	0	0	0	0	0	1	0	1	0	1	0	0	1	0	2	3	0	5	7
04:30 PM	0	0	0	0	0	0	0	0	0	0	1	3	0	0	4	0	3	4	0	7	11
04:45 PM	0	0	0	0	0	0	0	0	0	0	0	1	0	0	1	0	4	0	0	4	5
Total	0	0	0	2	2	0	0	1	0	1	2	10	0	0	12	0	16	10	0	26	41
05:00 PM	0	0	0	0	0	0	0	0	0	0	0	1	0	0	1	0	2	2	0	4	5
05:15 PM	0	0	0	1	1	0	0	0	1	1	0	3	0	0	3	0	3	0	0	3	8
05:30 PM	0	0	0	1	1	0	0	0	0	0	0	1	0	0	1	0	2	1	1	4	6
05:45 PM	0	0	0	0	0	0	0	0	0	0	0	2	0	0	2	0	0	0	0	0	2
Total	0	0	0	2	2	0	0	0	1	1	0	7	0	0	7	0	7	3	1	11	21
06:00 PM	0	0	0	0	0	0	0	0	1	1	0	3	0	0	3	0	1	1	0	2	6
06:15 PM	0	0	0	0	0	0	0	0	0	0	0	2	0	0	2	0	0	1	0	1	3
06:30 PM	0	0	0	0	0	0	0	0	0	0	0	2	0	0	2	0	4	1	0	5	7
06:45 PM	0	0	0	0	0	0	0	0	0	0	0	1	0	0	1	0	2	0	0	2	3
Total	0	0	0	0	0	0	0	0	1	1	0	8	0	0	8	0	7	3	0	10	19
Grand Total	0	0	2	9	11	1	0	8	9	18	6	110	0	1	117	0	121	33	2	156	302
Apprch %	0	0	18.2	81.8		5.6	0	44.4	50		5.1	94	0	0.9		0	77.6	21.2	1.3		
Total %	0	0	0.7	3	3.6	0.3	0	2.6	3	6	2	36.4	0	0.3	38.7	0	40.1	10.9	0.7	51.7	

Miami Gardens Drive & NW 59th Avenue

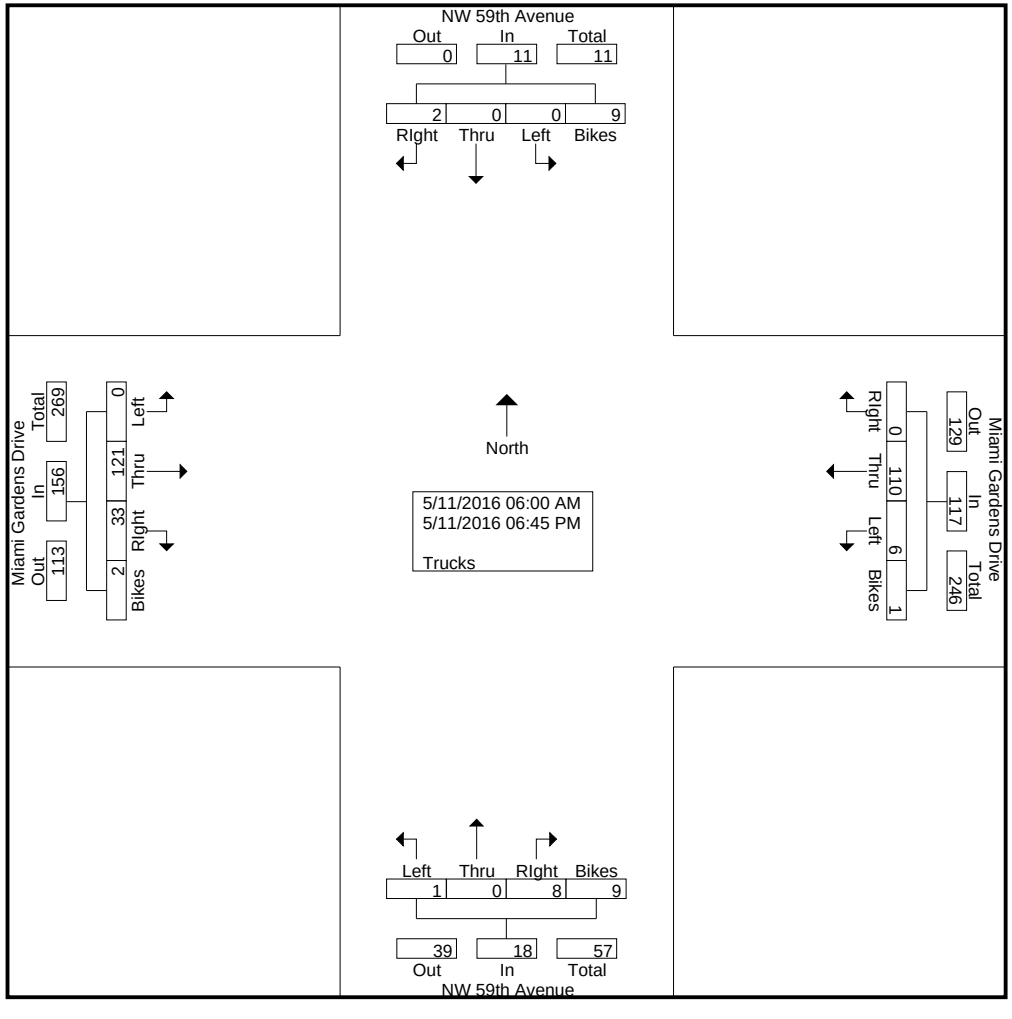

Miami Gardens Drive & NW 59th Avenue

File Name : Miami Gardens Drive & NW 59th Avenue
Site Code : 00000000
Start Date : 5/11/2016
Page No : 3

	NW 59th Avenue Southbound					NW 59th Avenue Northbound					Miami Gardens Drive Westbound					Miami Gardens Drive Eastbound					
Start Time	Left	Thru	RIght	Bikes	App. Total	Left	Thru	RIght	Bikes	App. Total	Left	Thru	RIght	Bikes	App. Total	Left	Thru	RIght	Bikes	App. Total	Int. Total
Peak Hour Analysis From 06:00 AM to 08:45 AM - Peak 1 of 1																					
Peak Hour for Entire Intersection Begins at 06:15 AM																					
06:15 AM	0	0	0	0	0	0	0	**2**	0	**2**	0	**11**	0	0	**11**	0	8	**3**	0	**11**	**24**
06:30 AM	0	0	0	**1**	**1**	0	0	0	**1**	1	0	5	0	0	5	0	**10**	0	0	10	17
06:45 AM	0	0	0	0	0	0	0	1	1	2	**1**	7	0	0	8	0	10	1	0	11	21
07:00 AM	0	0	0	0	0	0	0	1	1	2	0	3	0	0	3	0	8	0	0	8	13
Total Volume	0	0	0	1	1	0	0	4	3	7	1	26	0	0	27	0	36	4	0	40	75
% App. Total	0	0	0	100		0	0	57.1	42.9		3.7	96.3	0	0		0	90	10	0		
PHF	.000	.000	.000	.250	.250	.000	.000	.500	.750	.875	.250	.591	.000	.000	.614	.000	.900	.333	.000	.909	.781

Miami Gardens Drive & NW 59th Avenue

File Name : Miami Gardens Drive & NW 59th Avenue
Site Code : 00000000
Start Date : 5/11/2016
Page No : 4

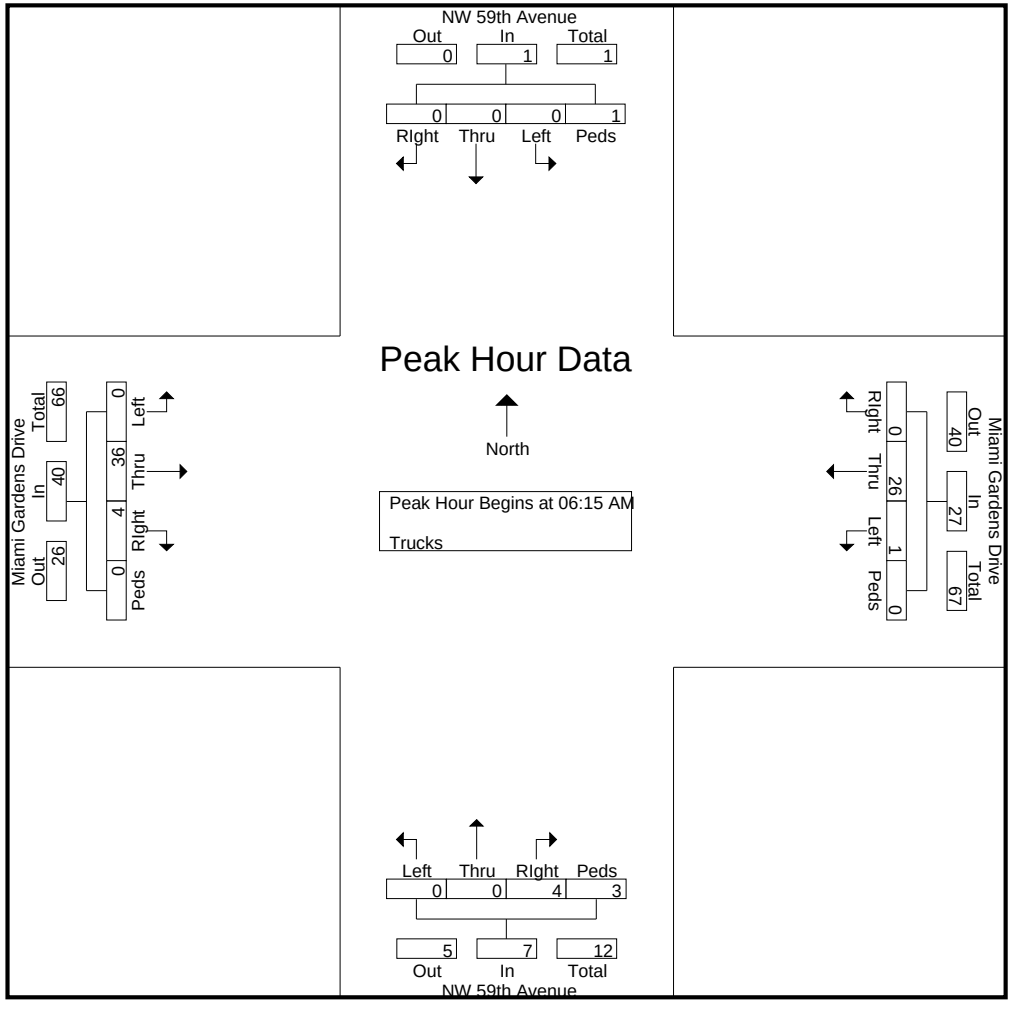

Miami Gardens Drive & NW 59th Avenue

File Name : Miami Gardens Drive & NW 59th Avenue
Site Code : 00000000
Start Date : 5/11/2016
Page No : 5

	NW 59th Avenue Southbound					NW 59th Avenue Northbound					Miami Gardens Drive Westbound					Miami Gardens Drive Eastbound					
Start Time	Left	Thru	RIght	Bikes	App. Total	Left	Thru	RIght	Bikes	App. Total	Left	Thru	RIght	Bikes	App. Total	Left	Thru	RIght	Bikes	App. Total	Int. Total
Peak Hour Analysis From 03:00 PM to 06:45 PM - Peak 1 of 1																					
Peak Hour for Entire Intersection Begins at 03:15 PM																					
03:15 PM	0	0	0	0	0	0	0	0	0	0	0	**6**	0	0	**6**	0	3	2	0	5	11
03:30 PM	0	0	0	1	1	0	0	0	**1**	**1**	0	1	0	**1**	2	0	4	2	0	6	10
03:45 PM	0	0	0	0	0	0	0	**1**	0	1	0	5	0	0	5	0	4	1	0	5	11
04:00 PM	0	0	0	**2**	**2**	0	0	0	0	0	**1**	5	0	0	6	0	**7**	**3**	0	**10**	**18**
Total Volume	0	0	0	3	3	0	0	1	1	2	1	17	0	1	19	0	18	8	0	26	50
% App. Total	0	0	0	100		0	0	50	50		5.3	89.5	0	5.3		0	69.2	30.8	0		
PHF	.000	.000	.000	.375	.375	.000	.000	.250	.250	.500	.250	.708	.000	.250	.792	.000	.643	.667	.000	.650	.694

Miami Gardens Drive & NW 59th Avenue

File Name : Miami Gardens Drive & NW 59th Avenue
Site Code : 00000000
Start Date : 5/11/2016
Page No : 6

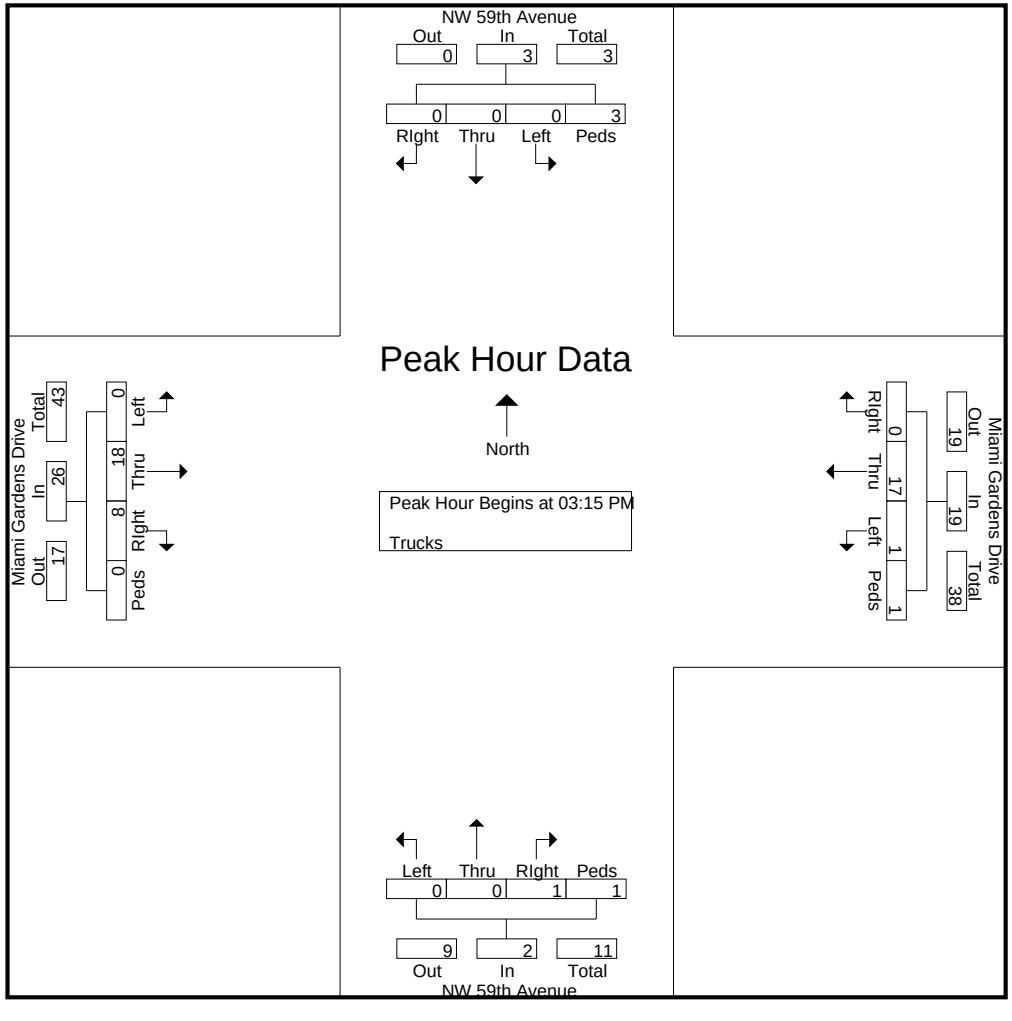

Miami Gardens Drive & NW 59th Avenue

File Name : Miami Gardens Drive & NW 59th Avenue
Site Code : 00000000
Start Date : 5/11/2016
Page No : 1

Groups Printed- Turns

	NW 59th Avenue Southbound					NW 59th Avenue Northbound					Miami Gardens Drive Westbound					Miami Gardens Drive Eastbound					
Start Time	Left	Thru	RIght	Peds/Bike	App. Total	Left	Thru	RIght	Peds/Bike	App. Total	Left	Thru	RIght	Peds/Bike	App. Total	Left	Thru	RIght	Peds/Bike	App. Total	Int. Total
*** BREAK ***																					
07:30 AM	0	0	0	0	0	1	0	0	0	1	0	0	0	0	0	0	0	0	0	0	1
*** BREAK ***																					
Total	0	0	0	0	0	1	0	0	0	1	0	0	0	0	0	0	0	0	0	0	1
*** BREAK ***																					
08:30 AM	0	0	0	0	0	0	0	0	0	0	0	0	0	0	0	1	0	0	0	1	1
*** BREAK ***																					
Total	0	0	0	0	0	0	0	0	0	0	0	0	0	0	0	1	0	0	0	1	1
*** BREAK ***																					
03:30 PM	0	0	0	0	0	2	0	0	0	2	3	0	0	0	3	0	0	0	0	0	5
03:45 PM	0	0	0	0	0	0	0	0	0	0	1	0	0	0	1	0	0	0	0	0	1
Total	0	0	0	0	0	2	0	0	0	2	4	0	0	0	4	0	0	0	0	0	6
04:00 PM	0	0	0	0	0	1	0	0	0	1	0	0	0	0	0	0	0	0	0	0	1
*** BREAK ***																					
Total	0	0	0	0	0	1	0	0	0	1	0	0	0	0	0	0	0	0	0	0	1
*** BREAK ***																					
05:45 PM	2	0	0	0	2	0	0	0	0	0	2	0	0	0	2	0	0	0	0	0	4
Total	2	0	0	0	2	0	0	0	0	0	2	0	0	0	2	0	0	0	0	0	4
*** BREAK ***																					
06:30 PM	0	0	0	0	0	0	0	0	0	0	1	0	0	0	1	0	0	0	0	0	1
06:45 PM	0	0	0	0	0	0	0	0	0	0	2	0	0	0	2	0	0	0	0	0	2
Total	0	0	0	0	0	0	0	0	0	0	3	0	0	0	3	0	0	0	0	0	3
Grand Total	2	0	0	0	2	4	0	0	0	4	9	0	0	0	9	1	0	0	0	1	16
Apprch %	100	0	0	0		100	0	0	0		100	0	0	0		100	0	0	0		
Total %	12.5	0	0	0	12.5	25	0	0	0	25	56.2	0	0	0	56.2	6.2	0	0	0	6.2	

Miami Gardens Drive & NW 59th Avenue

File Name : Miami Gardens Drive & NW 59th Avenue
Site Code : 00000000
Start Date : 5/11/2016
Page No : 2

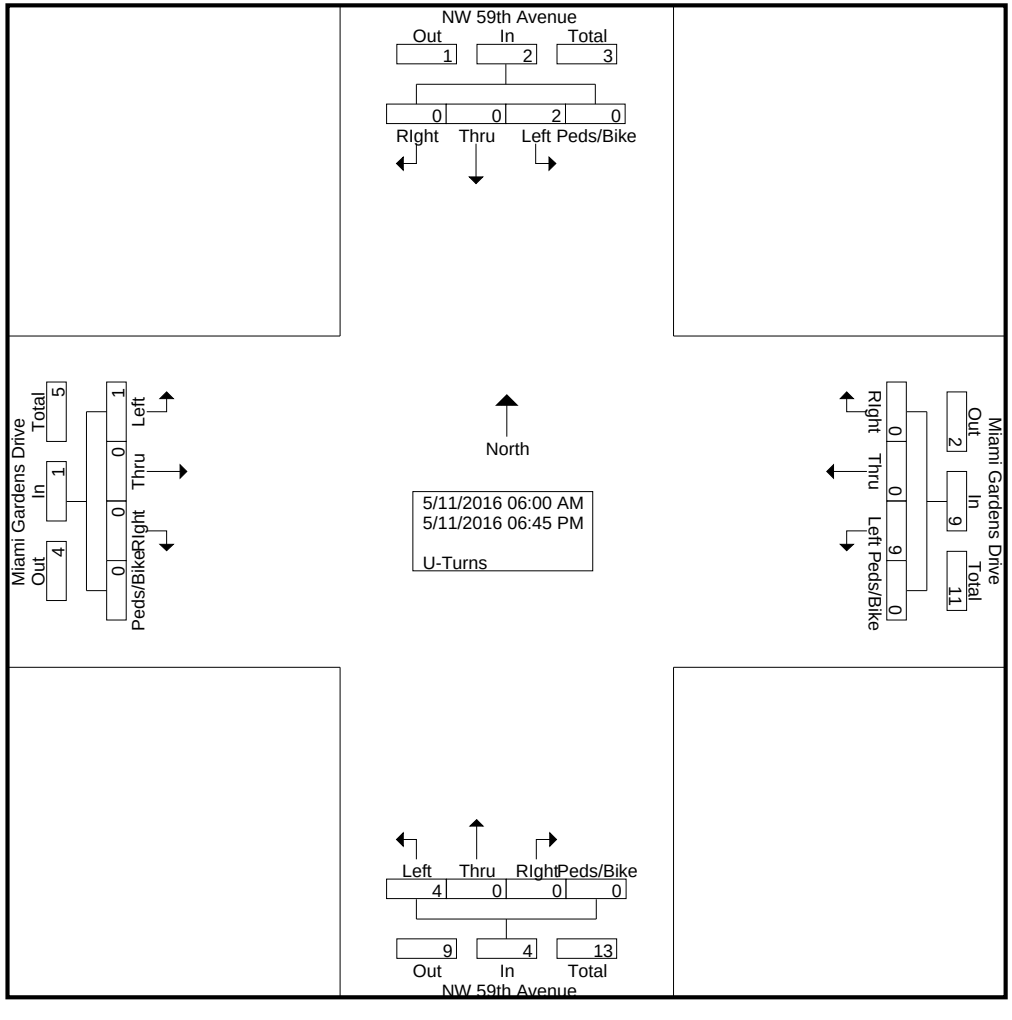

Miami Gardens Drive & NW 59th Avenue

File Name : Miami Gardens Drive & NW 59th Avenue
Site Code : 00000000
Start Date : 5/11/2016
Page No : 3

	NW 59th Avenue Southbound					NW 59th Avenue Northbound					Miami Gardens Drive Westbound					Miami Gardens Drive Eastbound					
Start Time	Left	Thru	RIght	Peds/Bike	App. Total	Left	Thru	RIght	Peds/Bike	App. Total	Left	Thru	RIght	Peds/Bike	App. Total	Left	Thru	RIght	Peds/Bike	App. Total	Int. Total
Peak Hour Analysis From 06:00 AM to 08:45 AM - Peak 1 of 1																					
Peak Hour for Entire Intersection Begins at 06:45 AM																					
06:45 AM	0	0	0	0	0	0	0	0	0	0	0	0	0	0	0	0	0	0	0	0	0
07:00 AM	0	0	0	0	0	0	0	0	0	0	0	0	0	0	0	0	0	0	0	0	0
07:15 AM	0	0	0	0	0	0	0	0	0	0	0	0	0	0	0	0	0	0	0	0	0
07:30 AM	0	0	0	0	0	**1**	0	0	0	**1**	0	0	0	0	0	0	0	0	0	0	**1**
Total Volume	0	0	0	0	0	1	0	0	0	1	0	0	0	0	0	0	0	0	0	0	1
% App. Total	0	0	0	0		100	0	0	0		0	0	0	0		0	0	0	0		
PHF	.000	.000	.000	.000	.000	.250	.000	.000	.000	.250	.000	.000	.000	.000	.000	.000	.000	.000	.000	.000	.250

Miami Gardens Drive & NW 59th Avenue

File Name : Miami Gardens Drive & NW 59th Avenue
Site Code : 00000000
Start Date : 5/11/2016
Page No : 4

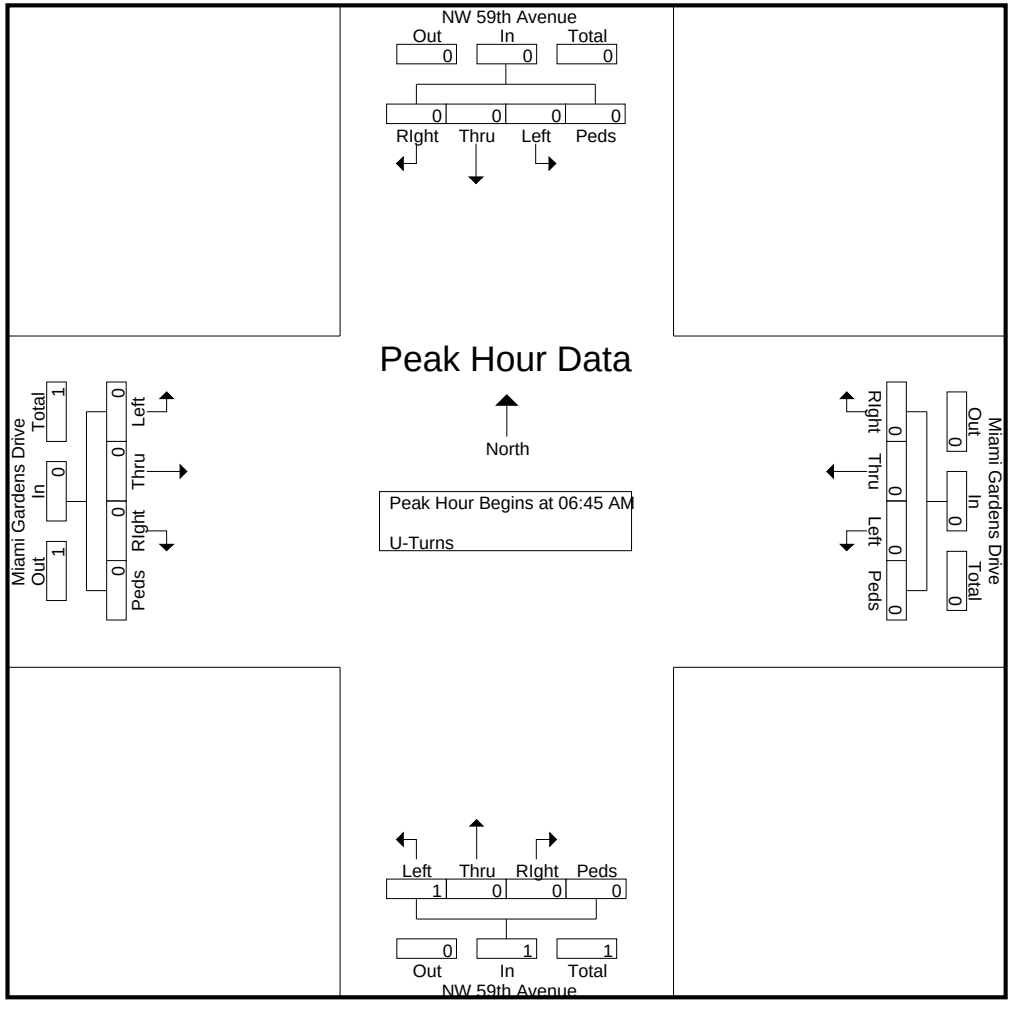

Miami Gardens Drive & NW 59th Avenue

File Name : Miami Gardens Drive & NW 59th Avenue
Site Code : 00000000
Start Date : 5/11/2016
Page No : 5

	NW 59th Avenue Southbound					NW 59th Avenue Northbound					Miami Gardens Drive Westbound					Miami Gardens Drive Eastbound					
Start Time	Left	Thru	RIght	Peds/Bike	App. Total	Left	Thru	RIght	Peds/Bike	App. Total	Left	Thru	RIght	Peds/Bike	App. Total	Left	Thru	RIght	Peds/Bike	App. Total	Int. Total
Peak Hour Analysis From 03:00 PM to 06:45 PM - Peak 1 of 1																					
Peak Hour for Entire Intersection Begins at 03:15 PM																					
03:15 PM	0	0	0	0	0	0	0	0	0	0	0	0	0	0	0	0	0	0	0	0	0
03:30 PM	0	0	0	0	0	**2**	0	0	0	**2**	**3**	0	0	0	**3**	0	0	0	0	0	**5**
03:45 PM	0	0	0	0	0	0	0	0	0	0	1	0	0	0	1	0	0	0	0	0	1
04:00 PM	0	0	0	0	0	1	0	0	0	1	0	0	0	0	0	0	0	0	0	0	1
Total Volume	0	0	0	0	0	3	0	0	0	3	4	0	0	0	4	0	0	0	0	0	7
% App. Total	0	0	0	0		100	0	0	0		100	0	0	0		0	0	0	0		
PHF	.000	.000	.000	.000	.000	.375	.000	.000	.000	.375	.333	.000	.000	.000	.333	.000	.000	.000	.000	.000	.350

Miami Gardens Drive & NW 59th Avenue

File Name : Miami Gardens Drive & NW 59th Avenue
Site Code : 00000000
Start Date : 5/11/2016
Page No : 6

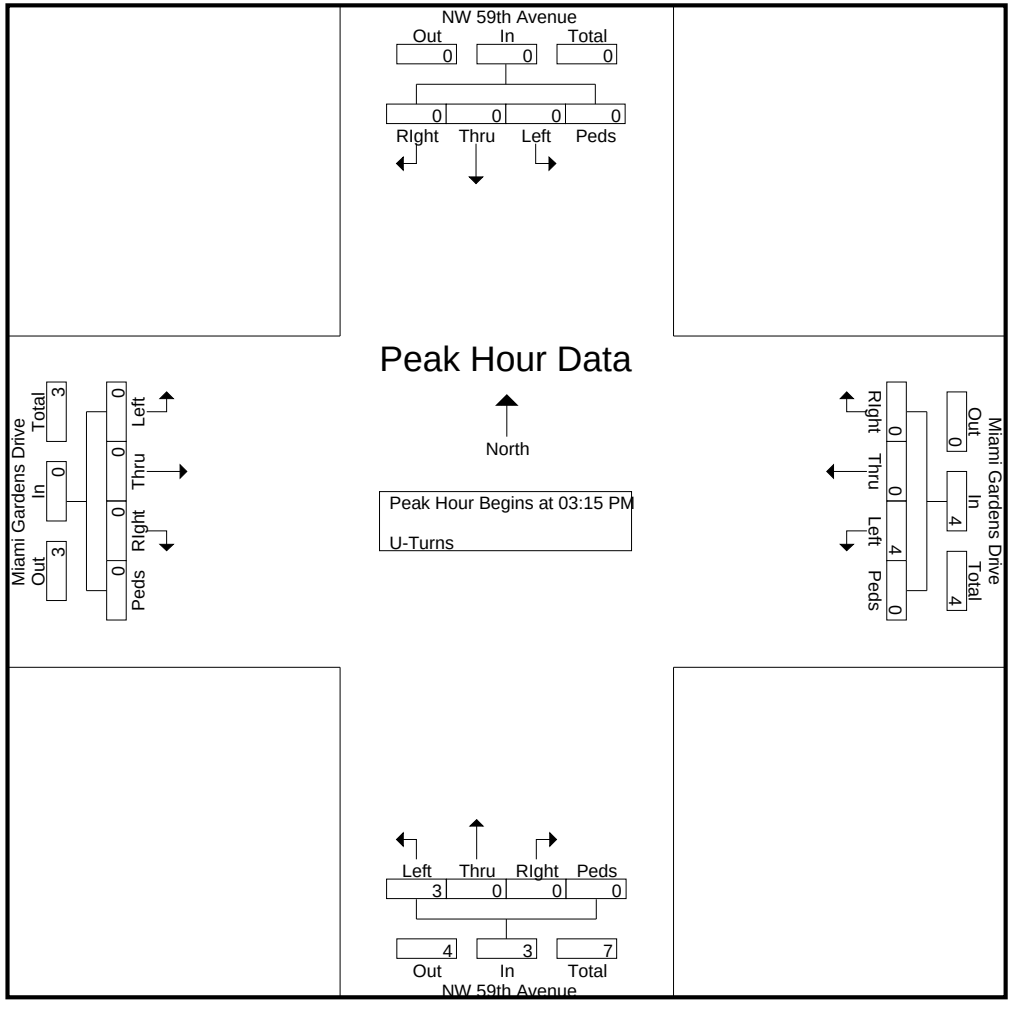

Miami Gardens Drive & NW 59th Avenue

File Name : Miami Gardens Drive & NW 59th Avenue
Site Code : 00000000
Start Date : 5/11/2016
Page No : 1

Groups Printed- Veh - Trucks - Turns

	NW 59th Avenue Southbound					NW 59th Avenue Northbound					Miami Gardens Drive Westbound					Miami Gardens Drive Eastbound					
Start Time	Left	Thru	RIght	Peds/Bike	App. Total	Left	Thru	RIght	Peds/Bike	App. Total	Left	Thru	RIght	Peds/Bike	App. Total	Left	Thru	RIght	Peds/Bike	App. Total	Int. Total
06:00 AM	0	0	1	0	1	0	0	5	1	6	2	64	0	0	66	2	103	25	2	132	205
06:15 AM	2	0	8	1	11	1	0	17	1	19	12	137	5	0	154	4	148	37	0	189	373
06:30 AM	0	0	1	1	2	0	0	12	2	14	13	211	0	0	224	1	232	55	0	288	528
06:45 AM	1	0	1	3	5	0	0	14	3	17	29	215	3	1	248	0	262	88	0	350	620
Total	3	0	11	5	19	1	0	48	7	56	56	627	8	1	692	7	745	205	2	959	1726
07:00 AM	0	0	4	0	4	0	0	34	2	36	20	248	5	0	273	2	344	73	0	419	732
07:15 AM	0	0	5	3	8	0	0	26	0	26	37	240	1	1	279	2	372	100	0	474	787
07:30 AM	0	0	5	1	6	1	0	32	1	34	45	268	5	0	318	8	341	123	0	472	830
07:45 AM	0	0	12	1	13	1	0	54	0	55	44	258	8	3	313	5	314	116	0	435	816
Total	0	0	26	5	31	2	0	146	3	151	146	1014	19	4	1183	17	1371	412	0	1800	3165
08:00 AM	0	0	9	4	13	0	0	42	2	44	22	201	5	0	228	6	320	73	0	399	684
08:15 AM	0	0	12	0	12	0	0	35	2	37	17	281	17	0	315	6	332	70	0	408	772
08:30 AM	0	0	25	2	27	0	1	37	0	38	21	200	10	0	231	28	259	80	1	368	664
08:45 AM	1	0	18	0	19	0	0	34	0	34	27	208	17	1	253	12	186	80	1	279	585
Total	1	0	64	6	71	0	1	148	4	153	87	890	49	1	1027	52	1097	303	2	1454	2705
*** BREAK ***																					
03:00 PM	1	0	36	11	48	0	0	42	1	43	20	245	17	1	283	8	225	51	0	284	658
03:15 PM	0	0	35	0	35	0	0	40	0	40	24	261	15	2	302	18	213	70	1	302	679
03:30 PM	0	0	33	1	34	2	1	35	2	40	9	283	28	2	322	17	220	54	0	291	687
03:45 PM	0	0	35	1	36	1	1	51	4	57	8	239	30	1	278	15	274	47	0	336	707
Total	1	0	139	13	153	3	2	168	7	180	61	1028	90	6	1185	58	932	222	1	1213	2731
04:00 PM	0	0	50	2	52	1	0	37	0	38	16	227	27	0	270	27	273	57	0	357	717
04:15 PM	0	0	38	2	40	0	0	34	0	34	22	269	19	2	312	21	293	47	0	361	747
04:30 PM	0	1	41	4	46	0	0	44	1	45	13	225	34	4	276	18	194	55	0	267	634
04:45 PM	0	0	36	14	50	0	0	37	3	40	9	269	12	0	290	16	262	50	0	328	708
Total	0	1	165	22	188	1	0	152	4	157	60	990	92	6	1148	82	1022	209	0	1313	2806
05:00 PM	1	0	37	1	39	0	0	46	4	50	7	305	22	2	336	15	212	67	0	294	719
05:15 PM	0	0	34	2	36	0	0	50	7	57	17	302	10	3	332	8	289	51	1	349	774
05:30 PM	0	0	15	1	16	0	0	39	1	40	10	323	11	0	344	5	270	54	1	330	730
05:45 PM	4	0	26	0	30	0	0	35	0	35	16	320	6	0	342	8	253	48	0	309	716
Total	5	0	112	4	121	0	0	170	12	182	50	1250	49	5	1354	36	1024	220	2	1282	2939
06:00 PM	0	0	9	3	12	0	0	26	1	27	15	363	4	0	382	3	290	56	0	349	770
06:15 PM	0	0	13	1	14	0	0	52	0	52	22	345	7	0	374	1	287	44	0	332	772
06:30 PM	0	0	17	0	17	0	0	46	0	46	16	338	6	0	360	3	267	46	0	316	739
06:45 PM	0	0	5	0	5	1	2	28	0	31	17	329	3	0	349	5	234	43	0	282	667
Total	0	0	44	4	48	1	2	152	1	156	70	1375	20	0	1465	12	1078	189	0	1279	2948
Grand Total	10	1	561	59	631	8	5	984	38	1035	530	7174	327	23	8054	264	7269	1760	7	9300	19020
Apprch %	1.6	0.2	88.9	9.4		0.8	0.5	95.1	3.7		6.6	89.1	4.1	0.3		2.8	78.2	18.9	0.1		
Total %	0.1	0	2.9	0.3	3.3	0	0	5.2	0.2	5.4	2.8	37.7	1.7	0.1	42.3	1.4	38.2	9.3	0	48.9	

Miami Gardens Drive & NW 59th Avenue

File Name : Miami Gardens Drive & NW 59th Avenue
Site Code : 00000000
Start Date : 5/11/2016
Page No : 2

Groups Printed- Veh - Trucks - Turns

	NW 59th Avenue Southbound					NW 59th Avenue Northbound					Miami Gardens Drive Westbound					Miami Gardens Drive Eastbound					
	Left	Thru	RIght	Peds/Bike	App. Total	Left	Thru	RIght	Peds/Bike	App. Total	Left	Thru	RIght	Peds/Bike	App. Total	Left	Thru	RIght	Peds/Bike	App. Total	Int. Total
Veh	8	1	559	50	618	3	5	976	29	1013	515	7064	327	22	7928	263	7148	1727	5	9143	18702
% Veh	80	100	99.6	84.7	97.9	37.5	100	99.2	76.3	97.9	97.2	98.5	100	95.7	98.4	99.6	98.3	98.1	71.4	98.3	98.3
Trucks	0	0	2	9	11	1	0	8	9	18	6	110	0	1	117	0	121	33	2	156	302
% Trucks	0	0	0.4	15.3	1.7	12.5	0	0.8	23.7	1.7	1.1	1.5	0	4.3	1.5	0	1.7	1.9	28.6	1.7	1.6
U-Turns	2	0	0	0	2	4	0	0	0	4	9	0	0	0	9	1	0	0	0	1	16
% U-Turns	20	0	0	0	0.3	50	0	0	0	0.4	1.7	0	0	0	0.1	0.4	0	0	0	0	0.1

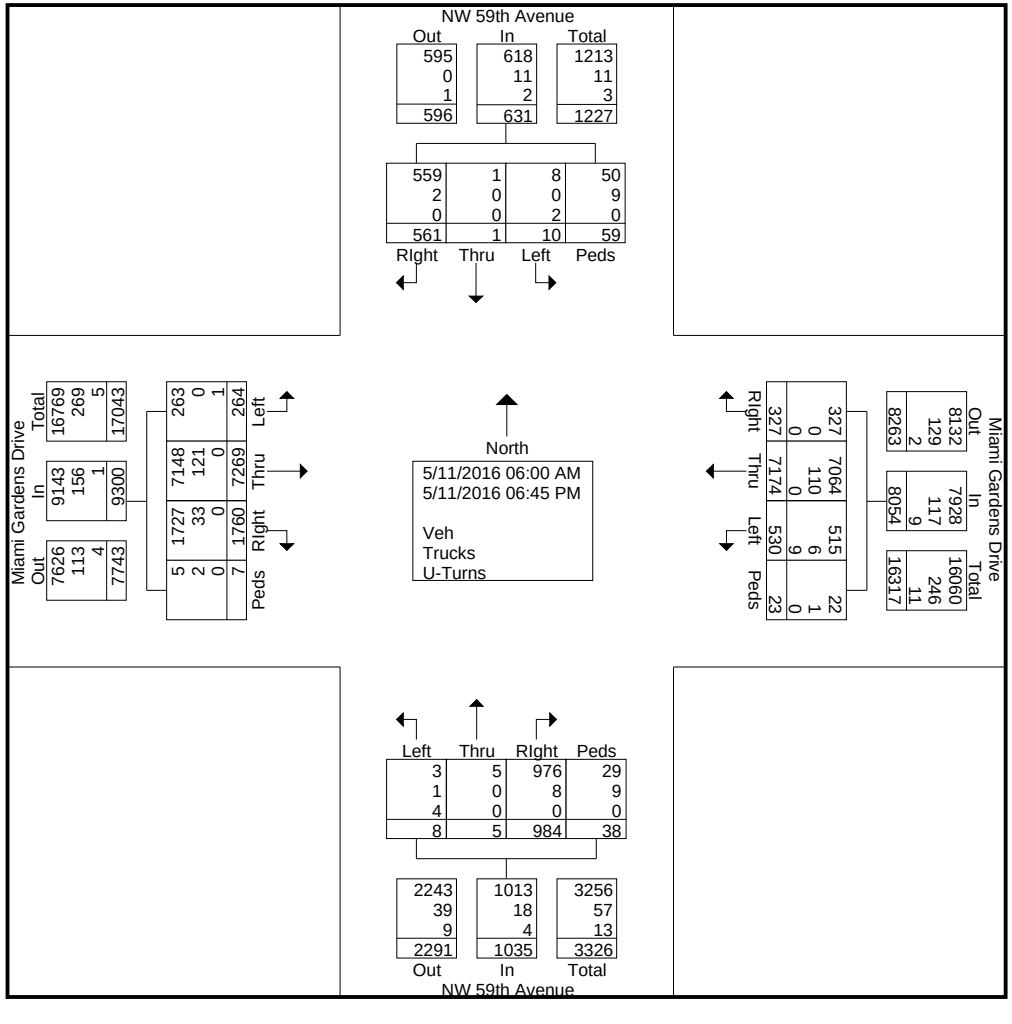

Miami Gardens Drive & NW 59th Avenue

File Name : Miami Gardens Drive & NW 59th Avenue
Site Code : 00000000
Start Date : 5/11/2016
Page No : 3

	NW 59th Avenue Southbound					NW 59th Avenue Northbound					Miami Gardens Drive Westbound					Miami Gardens Drive Eastbound					
Start Time	Left	Thru	RIght	Peds/Bike	App. Total	Left	Thru	RIght	Peds/Bike	App. Total	Left	Thru	RIght	Peds/Bike	App. Total	Left	Thru	RIght	Peds/Bike	App. Total	Int. Total
Peak Hour Analysis From 06:00 AM to 08:45 AM - Peak 1 of 1																					
Peak Hour for Entire Intersection Begins at 07:00 AM																					
07:00 AM	0	0	4	0	4	0	0	34	**2**	36	20	248	5	0	273	2	344	73	0	419	732
07:15 AM	0	0	5	**3**	8	0	0	26	0	26	37	240	1	1	279	2	**372**	100	0	**474**	787
07:30 AM	0	0	5	1	6	**1**	0	32	1	34	**45**	**268**	5	0	**318**	**8**	341	**123**	0	472	**830**
07:45 AM	0	0	**12**	1	**13**	1	0	**54**	0	**55**	44	258	**8**	**3**	313	5	314	116	0	435	816
Total Volume	0	0	26	5	31	2	0	146	3	151	146	1014	19	4	1183	17	1371	412	0	1800	3165
% App. Total	0	0	83.9	16.1		1.3	0	96.7	2		12.3	85.7	1.6	0.3		0.9	76.2	22.9	0		
PHF	.000	.000	.542	.417	.596	.500	.000	.676	.375	.686	.811	.946	.594	.333	.930	.531	.921	.837	.000	.949	.953

Miami Gardens Drive & NW 59th Avenue

File Name : Miami Gardens Drive & NW 59th Avenue
Site Code : 00000000
Start Date : 5/11/2016
Page No : 4

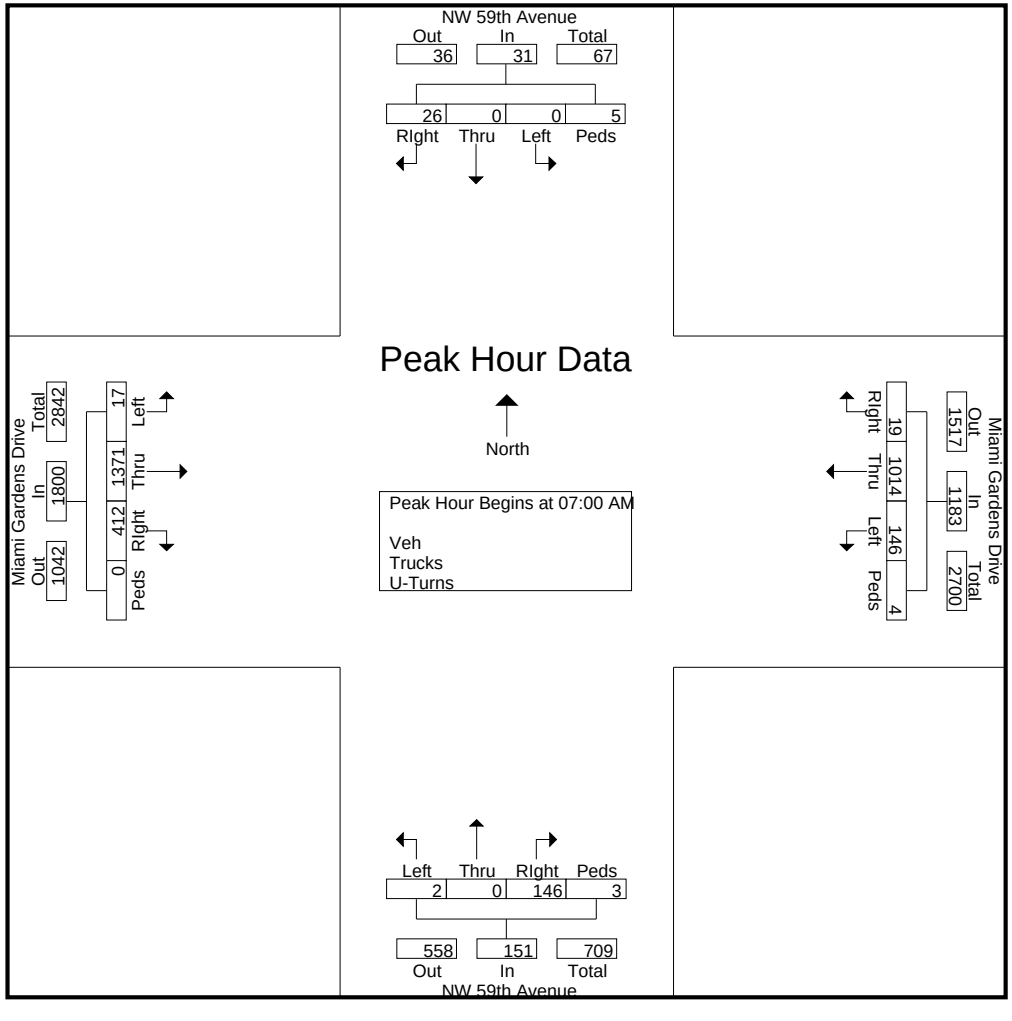

Miami Gardens Drive & NW 59th Avenue

File Name : Miami Gardens Drive & NW 59th Avenue
Site Code : 00000000
Start Date : 5/11/2016
Page No : 5

	NW 59th Avenue Southbound					NW 59th Avenue Northbound					Miami Gardens Drive Westbound					Miami Gardens Drive Eastbound					
Start Time	Left	Thru	RIght	Peds/Bike	App. Total	Left	Thru	RIght	Peds/Bike	App. Total	Left	Thru	RIght	Peds/Bike	App. Total	Left	Thru	RIght	Peds/Bike	App. Total	Int. Total
Peak Hour Analysis From 03:00 PM to 06:45 PM - Peak 1 of 1																					
Peak Hour for Entire Intersection Begins at 05:45 PM																					
05:45 PM	**4**	0	**26**	0	**30**	0	0	35	0	35	16	320	6	0	342	**8**	253	48	0	309	716
06:00 PM	0	0	9	**3**	12	0	0	26	**1**	27	15	**363**	4	0	**382**	3	**290**	**56**	0	**349**	770
06:15 PM	0	0	13	1	14	0	0	**52**	0	**52**	**22**	345	**7**	0	374	1	287	44	0	332	**772**
06:30 PM	0	0	17	0	17	0	0	46	0	46	16	338	6	0	360	3	267	46	0	316	739
Total Volume	4	0	65	4	73	0	0	159	1	160	69	1366	23	0	1458	15	1097	194	0	1306	2997
% App. Total	5.5	0	89	5.5		0	0	99.4	0.6		4.7	93.7	1.6	0		1.1	84	14.9	0		
PHF	.250	.000	.625	.333	.608	.000	.000	.764	.250	.769	.784	.941	.821	.000	.954	.469	.946	.866	.000	.936	.971

Miami Gardens Drive & NW 59th Avenue

File Name : Miami Gardens Drive & NW 59th Avenue
Site Code : 00000000
Start Date : 5/11/2016
Page No : 6

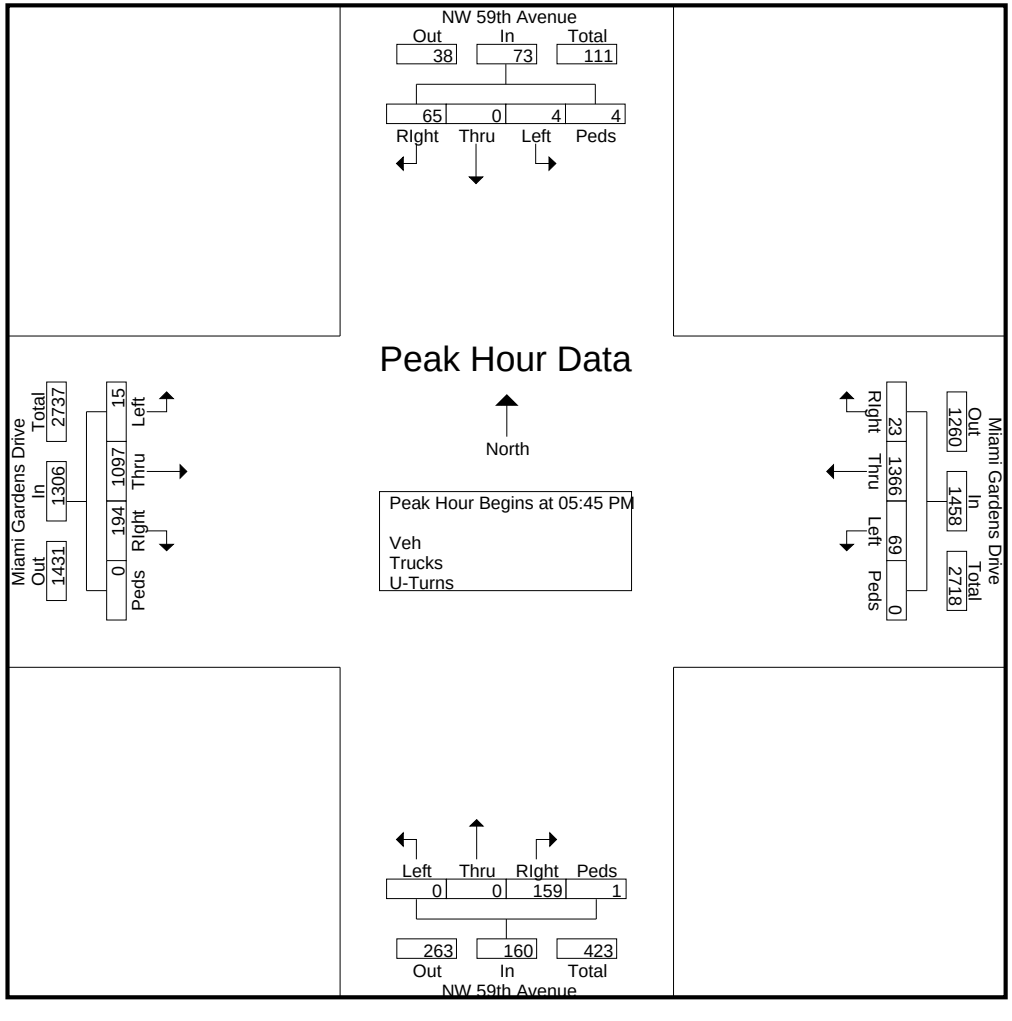

Miami Gardens Drive & Shopping Center Btw 56th & 57th Avenue

File Name : Miami Gardens Drive & Shopping Center Entrance (Btw 59th and 57th Avenue)
Site Code : 00000000
Start Date : 5/11/2016
Page No : 1

Groups Printed- Trucks

	Shopping Center Btw 59th and 57 Ave Southbound					Shopping Center Btw 59th and 57 Ave Northbound					Miami Gardens Drive Westbound					Miami Gardens Drive Eastbound					
Start Time	Left	Thru	RIght	Bikes	App. Total	Left	Thru	RIght	Bikes	App. Total	Left	Thru	RIght	Bikes	App. Total	Left	Thru	RIght	Bikes	App. Total	Int. Total
06:00 AM	0	0	0	0	0	0	0	0	1	1	0	4	0	0	4	0	3	1	0	4	9
06:15 AM	0	0	0	0	0	0	0	1	0	1	1	10	0	0	11	0	7	0	0	7	19
06:30 AM	0	0	0	0	0	0	0	0	2	2	0	6	0	0	6	0	10	0	0	10	18
06:45 AM	0	0	0	0	0	0	0	0	0	0	0	11	0	0	11	0	5	0	0	5	16
Total	0	0	0	0	0	0	0	1	3	4	1	31	0	0	32	0	25	1	0	26	62
07:00 AM	0	0	0	0	0	0	0	2	0	2	0	4	0	0	4	0	8	1	0	9	15
07:15 AM	0	0	0	0	0	0	0	1	0	1	0	6	0	0	6	0	7	0	0	7	14
07:30 AM	0	0	0	0	0	0	0	0	1	1	0	9	0	0	9	0	5	1	0	6	16
07:45 AM	0	0	0	0	0	0	0	0	0	0	0	9	0	0	9	0	5	0	0	5	14
Total	0	0	0	0	0	0	0	3	1	4	0	28	0	0	28	0	25	2	0	27	59
08:00 AM	0	0	0	0	0	0	0	0	0	0	0	5	0	0	5	0	3	0	0	3	8
08:15 AM	0	0	0	0	0	0	0	1	0	1	0	8	0	0	8	0	5	2	0	7	16
08:30 AM	0	0	0	0	0	2	0	1	0	3	0	8	0	0	8	0	8	0	0	8	19
08:45 AM	0	0	0	0	0	0	0	0	0	0	0	9	0	0	9	0	5	1	0	6	15
Total	0	0	0	0	0	2	0	2	0	4	0	30	0	0	30	0	21	3	0	24	58
*** BREAK ***																					
03:00 PM	0	0	0	0	0	0	0	0	3	3	0	3	0	0	3	0	12	1	0	13	19
03:15 PM	0	0	0	0	0	0	0	0	0	0	0	7	0	0	7	0	3	2	0	5	12
03:30 PM	0	0	0	0	0	0	0	0	0	0	0	7	0	0	7	0	8	0	0	8	15
03:45 PM	0	0	0	0	0	0	0	2	0	2	1	5	0	0	6	0	6	1	0	7	15
Total	0	0	0	0	0	0	0	2	3	5	1	22	0	0	23	0	29	4	0	33	61
04:00 PM	0	0	0	0	0	0	0	2	1	3	1	3	0	0	4	0	7	0	0	7	14
04:15 PM	0	0	0	0	0	0	0	0	1	1	0	5	0	0	5	3	10	0	0	13	19
04:30 PM	0	0	0	0	0	1	0	1	1	3	0	7	0	0	7	0	5	1	0	6	16
04:45 PM	0	0	0	0	0	0	0	0	0	0	0	2	0	0	2	0	4	0	0	4	6
Total	0	0	0	0	0	1	0	3	3	7	1	17	0	0	18	3	26	1	0	30	55
05:00 PM	0	0	0	0	0	0	0	0	2	2	1	2	0	0	3	0	5	0	0	5	10
05:15 PM	0	0	0	0	0	0	0	0	1	1	1	2	0	0	3	0	4	0	0	4	8
05:30 PM	0	0	0	0	0	0	0	0	2	2	0	2	0	0	2	0	4	0	0	4	8
05:45 PM	0	0	0	0	0	1	0	0	0	1	0	1	0	0	1	0	1	0	0	1	3
Total	0	0	0	0	0	1	0	0	5	6	2	7	0	0	9	0	14	0	0	14	29
06:00 PM	0	0	0	0	0	0	0	0	0	0	0	1	0	0	1	0	2	0	0	2	3
06:15 PM	0	0	0	0	0	0	0	0	1	1	0	2	0	0	2	0	1	0	0	1	4
06:30 PM	0	0	0	0	0	0	0	0	0	0	0	5	0	0	5	0	5	0	0	5	10
06:45 PM	0	0	0	0	0	0	0	0	1	1	0	5	0	0	5	0	6	0	0	6	12
Total	0	0	0	0	0	0	0	0	2	2	0	13	0	0	13	0	14	0	0	14	29
Grand Total	0	0	0	0	0	4	0	11	17	32	5	148	0	0	153	3	154	11	0	168	353
Apprch %	0	0	0	0		12.5	0	34.4	53.1		3.3	96.7	0	0		1.8	91.7	6.5	0		
Total %	0	0	0	0	0	1.1	0	3.1	4.8	9.1	1.4	41.9	0	0	43.3	0.8	43.6	3.1	0	47.6	

Miami Gardens Drive & Shopping Center Btw 56th & 57th Avenue

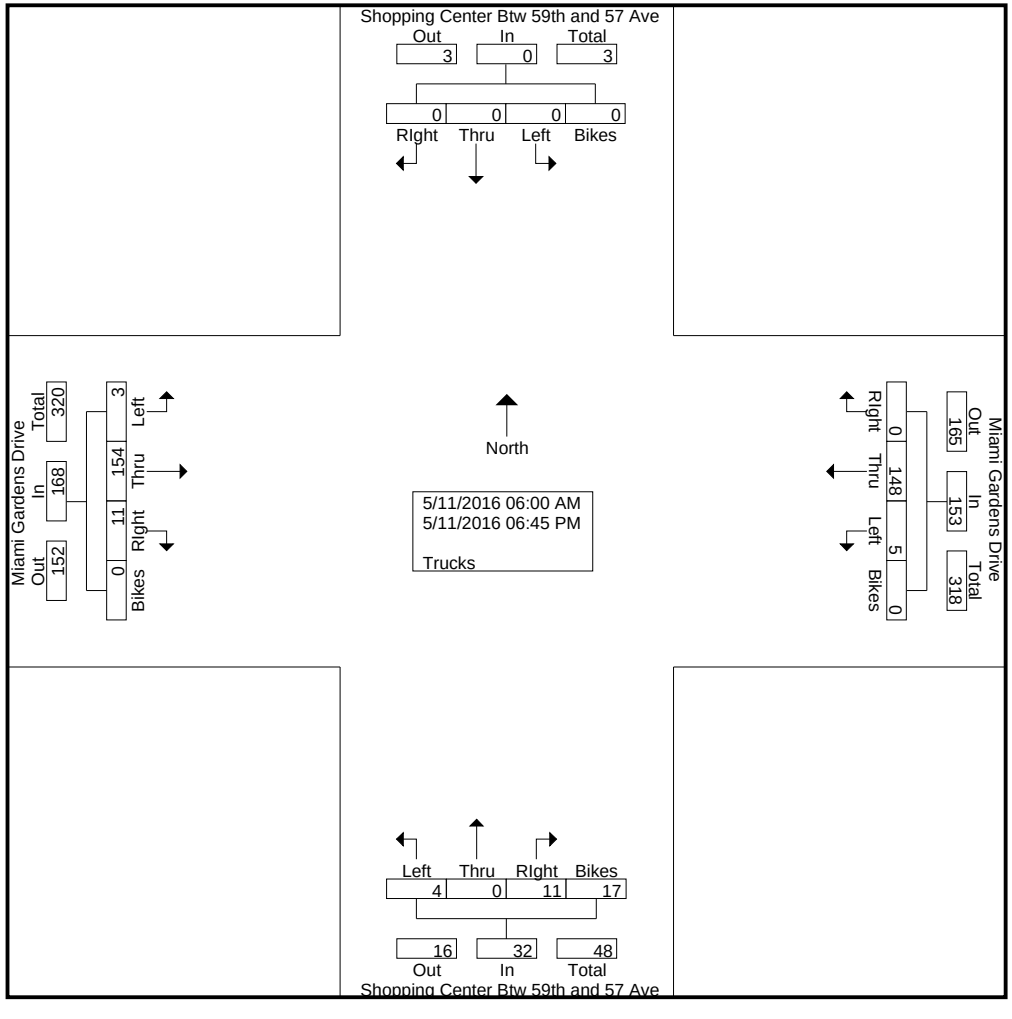

Miami Gardens Drive & Shopping Center Btw 56th & 57th Avenue

File Name : Miami Gardens Drive & Shopping Center Entrance (Btw 59th and 57th Avenue)
Site Code : 00000000
Start Date : 5/11/2016
Page No : 3

	Shopping Center Btw 59th and 57 Ave Southbound					Shopping Center Btw 59th and 57 Ave Northbound					Miami Gardens Drive Westbound					Miami Gardens Drive Eastbound					
Start Time	Left	Thru	RIght	Bikes	App. Total	Left	Thru	RIght	Bikes	App. Total	Left	Thru	RIght	Bikes	App. Total	Left	Thru	RIght	Bikes	App. Total	Int. Total
Peak Hour Analysis From 06:00 AM to 08:45 AM - Peak 1 of 1																					
Peak Hour for Entire Intersection Begins at 06:15 AM																					
06:15 AM	0	0	0	0	0	0	0	1	0	1	**1**	10	0	0	**11**	0	7	0	0	7	**19**
06:30 AM	0	0	0	0	0	0	0	0	**2**	**2**	0	6	0	0	6	0	**10**	0	0	**10**	18
06:45 AM	0	0	0	0	0	0	0	0	0	0	0	**11**	0	0	11	0	5	0	0	5	16
07:00 AM	0	0	0	0	0	0	0	**2**	0	2	0	4	0	0	4	0	8	**1**	0	9	15
Total Volume	0	0	0	0	0	0	0	3	2	5	1	31	0	0	32	0	30	1	0	31	68
% App. Total	0	0	0	0		0	0	60	40		3.1	96.9	0	0		0	96.8	3.2	0		
PHF	.000	.000	.000	.000	.000	.000	.000	.375	.250	.625	.250	.705	.000	.000	.727	.000	.750	.250	.000	.775	.895

Miami Gardens Drive & Shopping Center Btw 56th & 57th Avenue

File Name : Miami Gardens Drive & Shopping Center Entrance (Btw 59th and 57th Avenue)
Site Code : 00000000
Start Date : 5/11/2016
Page No : 4

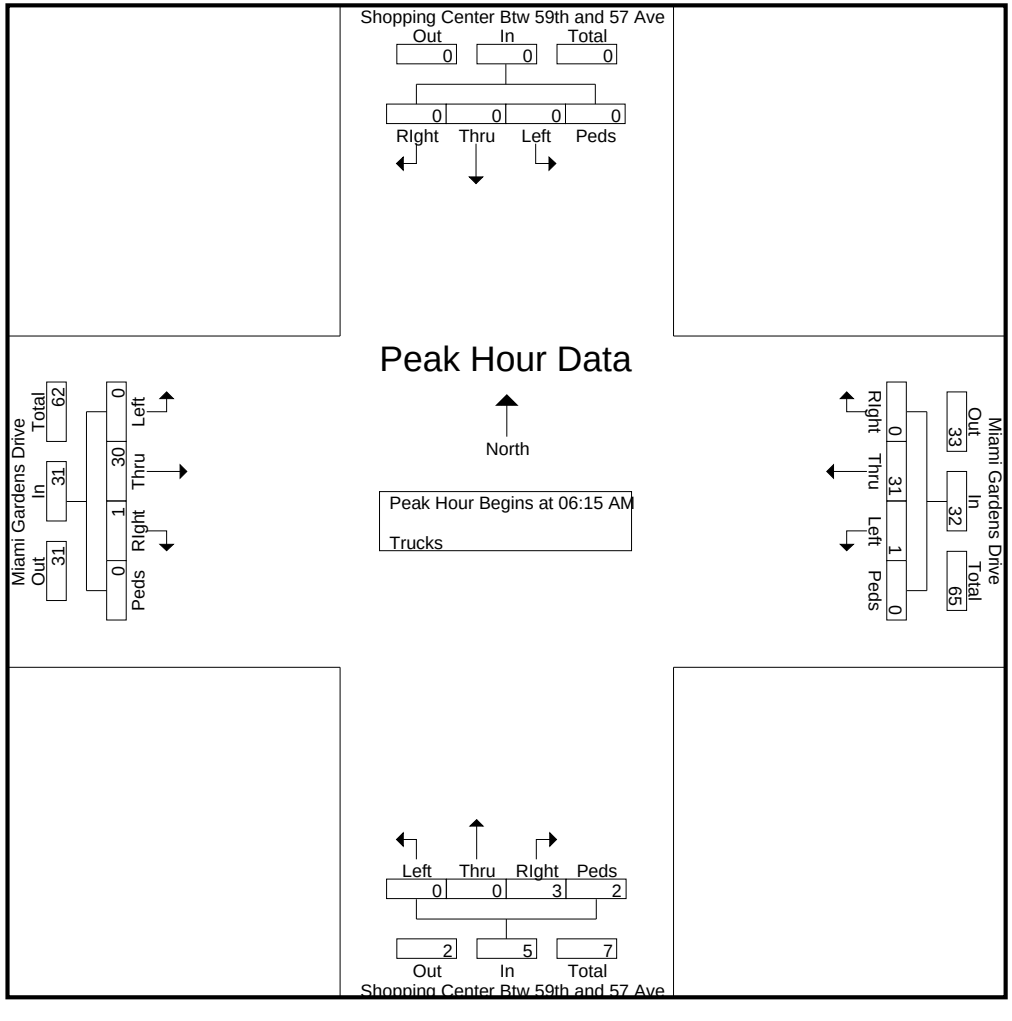

Miami Gardens Drive & Shopping Center Btw 56th & 57th Avenue

File Name : Miami Gardens Drive & Shopping Center Entrance (Btw 59th and 57th Avenue)
Site Code : 00000000
Start Date : 5/11/2016
Page No : 5

	Shopping Center Btw 59th and 57 Ave Southbound					Shopping Center Btw 59th and 57 Ave Northbound					Miami Gardens Drive Westbound					Miami Gardens Drive Eastbound					
Start Time	Left	Thru	RIght	Bikes	App. Total	Left	Thru	RIght	Bikes	App. Total	Left	Thru	RIght	Bikes	App. Total	Left	Thru	RIght	Bikes	App. Total	Int. Total
Peak Hour Analysis From 03:00 PM to 06:45 PM - Peak 1 of 1																					
Peak Hour for Entire Intersection Begins at 03:45 PM																					
03:45 PM	0	0	0	0	0	0	0	**2**	0	2	**1**	5	0	0	6	0	6	**1**	0	7	15
04:00 PM	0	0	0	0	0	0	0	2	**1**	**3**	1	3	0	0	4	0	7	0	0	7	14
04:15 PM	0	0	0	0	0	0	0	0	1	1	0	5	0	0	5	**3**	**10**	0	0	**13**	**19**
04:30 PM	0	0	0	0	0	**1**	0	1	1	3	0	**7**	0	0	**7**	0	5	1	0	6	16
Total Volume	0	0	0	0	0	1	0	5	3	9	2	20	0	0	22	3	28	2	0	33	64
% App. Total	0	0	0	0		11.1	0	55.6	33.3		9.1	90.9	0	0		9.1	84.8	6.1	0		
PHF	.000	.000	.000	.000	.000	.250	.000	.625	.750	.750	.500	.714	.000	.000	.786	.250	.700	.500	.000	.635	.842

Miami Gardens Drive & Shopping Center Btw 56th & 57th Avenue

File Name : Miami Gardens Drive & Shopping Center Entrance (Btw 59th and 57th Avenue)
Site Code : 00000000
Start Date : 5/11/2016
Page No : 6

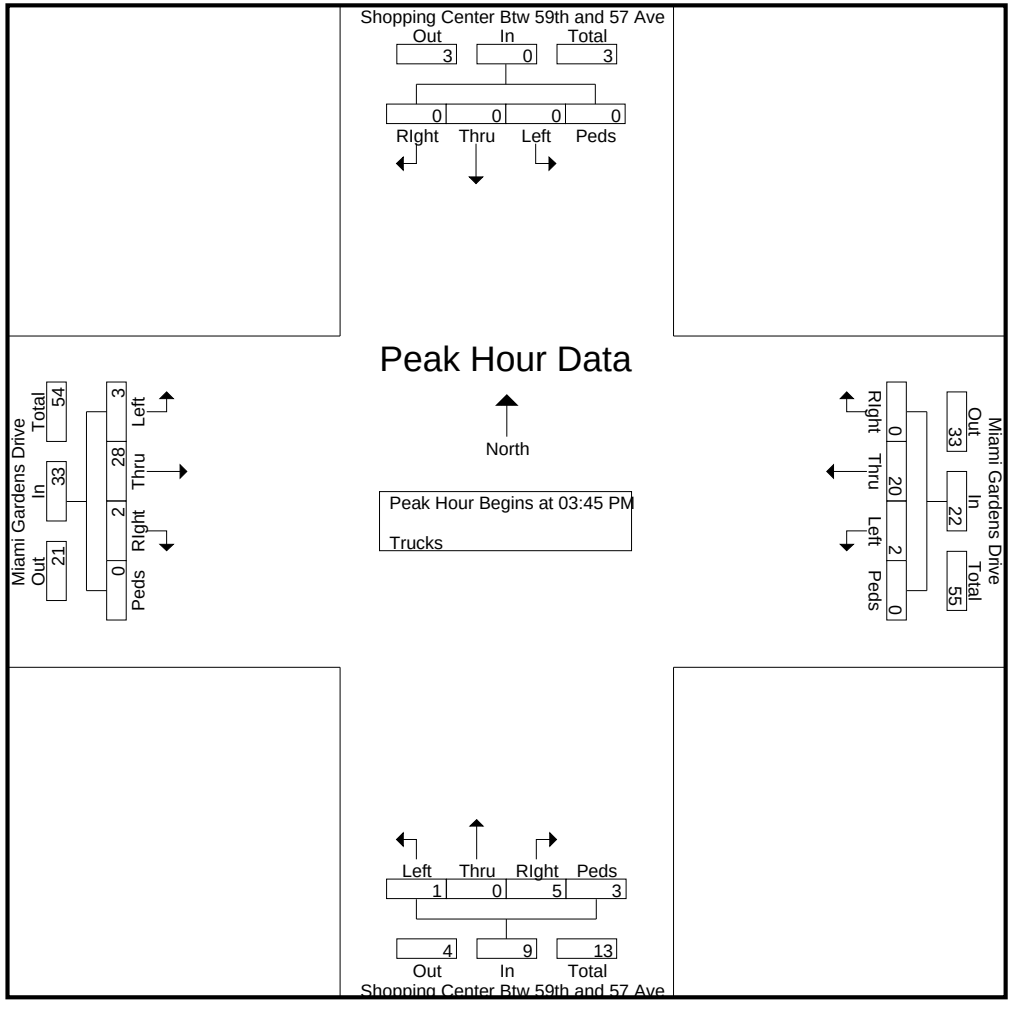

Miami Gardens Drive & Shopping Center Btw 56th & 57th Avenue

File Name : Miami Gardens Drive & Shopping Center Entrance (Btw 59th and 57th Avenue)
Site Code : 00000000
Start Date : 5/11/2016
Page No : 1

Groups Printed- Turns

	Shopping Center Btw 59th and 57 Ave Southbound					Shopping Center Btw 59th and 57 Ave Northbound					Miami Gardens Drive Westbound					Miami Gardens Drive Eastbound					
Start Time	Left	Thru	RIght	Peds/Bike	App. Total	Left	Thru	RIght	Peds/Bike	App. Total	Left	Thru	RIght	Peds/Bike	App. Total	Left	Thru	RIght	Peds/Bike	App. Total	Int. Total
06:00 AM	0	0	0	0	0	0	0	0	0	0	1	0	0	0	1	0	0	0	0	0	1
06:15 AM	0	0	0	0	0	0	0	0	0	0	2	0	0	0	2	0	0	0	0	0	2
06:30 AM	0	0	0	0	0	0	0	0	0	0	1	0	0	0	1	1	0	0	0	1	2
06:45 AM	0	0	0	0	0	0	0	0	0	0	5	0	0	0	5	1	0	0	0	1	6
Total	0	0	0	0	0	0	0	0	0	0	9	0	0	0	9	2	0	0	0	2	11
07:00 AM	0	0	0	0	0	0	0	0	0	0	2	0	0	0	2	0	0	0	0	0	2
*** BREAK ***																					
07:30 AM	0	0	0	0	0	0	0	0	0	0	1	0	0	0	1	0	0	0	0	0	1
*** BREAK ***																					
Total	0	0	0	0	0	0	0	0	0	0	3	0	0	0	3	0	0	0	0	0	3
08:00 AM	0	0	0	0	0	0	0	0	0	0	3	0	0	0	3	1	0	0	0	1	4
08:15 AM	0	0	0	0	0	0	0	0	0	0	2	0	0	0	2	1	0	0	0	1	3
08:30 AM	0	0	0	0	0	0	0	0	0	0	1	0	0	0	1	0	0	0	0	0	1
08:45 AM	0	0	0	0	0	0	0	0	0	0	1	0	0	0	1	1	0	0	0	1	2
Total	0	0	0	0	0	0	0	0	0	0	7	0	0	0	7	3	0	0	0	3	10
*** BREAK ***																					
03:00 PM	0	0	0	0	0	0	0	0	0	0	4	0	0	0	4	0	0	0	0	0	4
03:15 PM	0	0	0	0	0	0	0	0	0	0	11	0	0	0	11	0	0	0	0	0	11
03:30 PM	0	0	0	0	0	0	0	0	0	0	1	6	0	0	7	0	0	0	0	0	7
03:45 PM	0	0	0	0	0	0	0	0	0	0	2	1	0	0	3	0	0	0	0	0	3
Total	0	0	0	0	0	0	0	0	0	0	18	7	0	0	25	0	0	0	0	0	25
04:00 PM	0	0	0	0	0	0	0	0	0	0	4	0	0	0	4	1	0	0	0	1	5
04:15 PM	0	0	0	0	0	0	0	0	0	0	6	0	0	0	6	0	0	0	0	0	6
04:30 PM	0	0	0	0	0	0	0	0	0	0	1	0	0	0	1	1	0	0	0	1	2
04:45 PM	0	0	0	0	0	0	0	0	0	0	7	0	0	0	7	0	0	0	0	0	7
Total	0	0	0	0	0	0	0	0	0	0	18	0	0	0	18	2	0	0	0	2	20
05:00 PM	0	0	0	0	0	0	0	0	0	0	7	1	0	0	8	0	0	0	0	0	8
05:15 PM	0	0	0	0	0	0	0	0	0	0	7	0	0	0	7	1	0	0	0	1	8
05:30 PM	0	0	0	0	0	0	0	0	0	0	4	0	0	0	4	0	0	0	0	0	4
05:45 PM	0	0	0	0	0	0	0	0	0	0	4	0	0	0	4	0	0	0	0	0	4
Total	0	0	0	0	0	0	0	0	0	0	22	1	0	0	23	1	0	0	0	1	24
06:00 PM	0	0	0	0	0	0	0	0	0	0	11	0	0	0	11	0	0	0	0	0	11
06:15 PM	0	0	0	0	0	0	0	0	0	0	9	0	0	0	9	2	0	0	0	2	11
06:30 PM	0	0	0	0	0	0	0	0	0	0	6	0	0	0	6	2	0	0	0	2	8
06:45 PM	0	0	0	0	0	0	0	0	0	0	5	0	0	0	5	0	0	0	0	0	5
Total	0	0	0	0	0	0	0	0	0	0	31	0	0	0	31	4	0	0	0	4	35
Grand Total	0	0	0	0	0	0	0	0	0	0	108	8	0	0	116	12	0	0	0	12	128
Apprch %	0	0	0	0		0	0	0	0		93.1	6.9	0	0		100	0	0	0		
Total %	0	0	0	0	0	0	0	0	0	0	84.4	6.2	0	0	90.6	9.4	0	0	0	9.4	

Miami Gardens Drive & Shopping Center Btw 56th & 57th Avenue

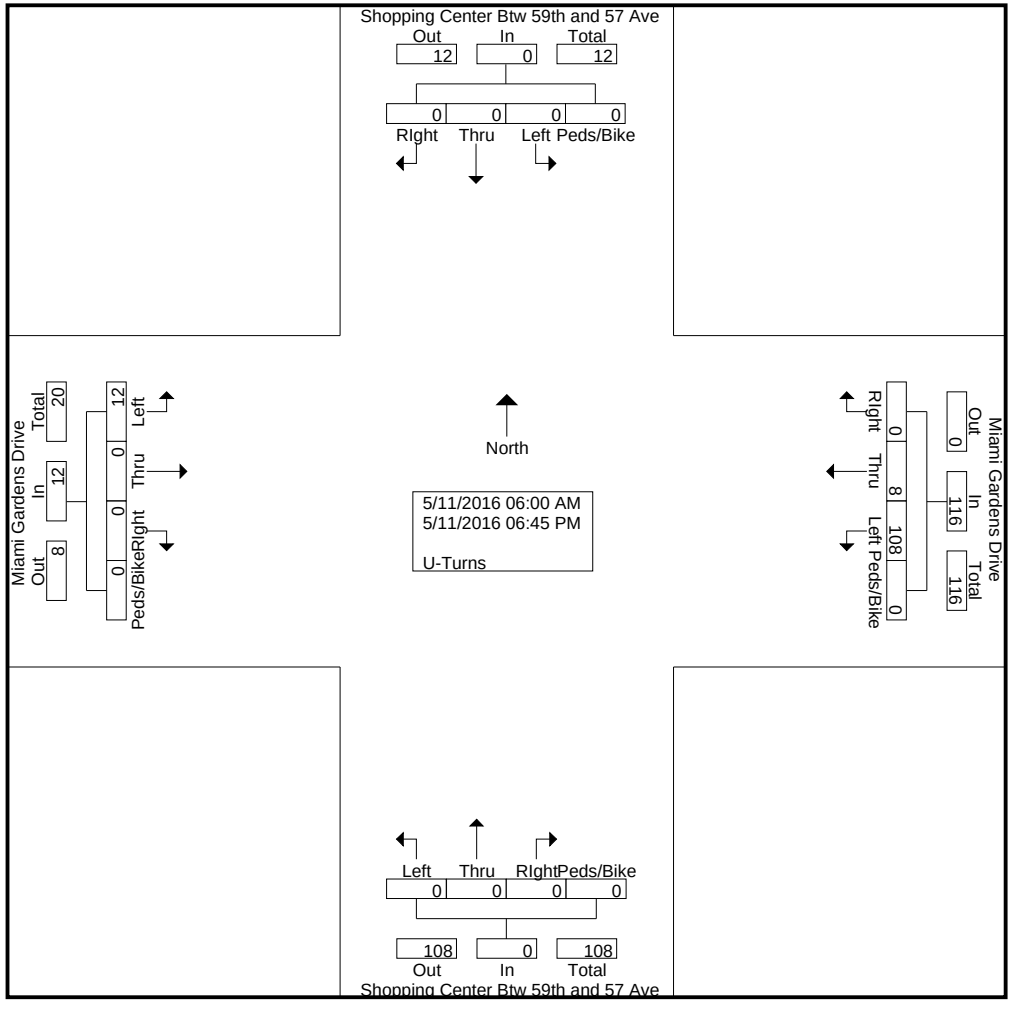

Miami Gardens Drive & Shopping Center Btw 56th & 57th Avenue

File Name : Miami Gardens Drive & Shopping Center Entrance (Btw 59th and 57th Avenue)
Site Code : 00000000
Start Date : 5/11/2016
Page No : 3

	Shopping Center Btw 59th and 57 Ave Southbound					Shopping Center Btw 59th and 57 Ave Northbound					Miami Gardens Drive Westbound					Miami Gardens Drive Eastbound					
Start Time	Left	Thru	RIght	Peds/Bike	App. Total	Left	Thru	RIght	Peds/Bike	App. Total	Left	Thru	RIght	Peds/Bike	App. Total	Left	Thru	RIght	Peds/Bike	App. Total	Int. Total
Peak Hour Analysis From 06:00 AM to 08:45 AM - Peak 1 of 1																					
Peak Hour for Entire Intersection Begins at 06:15 AM																					
06:15 AM	0	0	0	0	0	0	0	0	0	0	2	0	0	0	2	0	0	0	0	0	2
06:30 AM	0	0	0	0	0	0	0	0	0	0	1	0	0	0	1	**1**	0	0	0	**1**	2
06:45 AM	0	0	0	0	0	0	0	0	0	0	**5**	0	0	0	**5**	1	0	0	0	1	**6**
07:00 AM	0	0	0	0	0	0	0	0	0	0	2	0	0	0	2	0	0	0	0	0	2
Total Volume	0	0	0	0	0	0	0	0	0	0	10	0	0	0	10	2	0	0	0	2	12
% App. Total	0	0	0	0		0	0	0	0		100	0	0	0		100	0	0	0		
PHF	.000	.000	.000	.000	.000	.000	.000	.000	.000	.000	.500	.000	.000	.000	.500	.500	.000	.000	.000	.500	.500

Miami Gardens Drive & Shopping Center Btw 56th & 57th Avenue

File Name : Miami Gardens Drive & Shopping Center Entrance (Btw 59th and 57th Avenue)
Site Code : 00000000
Start Date : 5/11/2016
Page No : 4

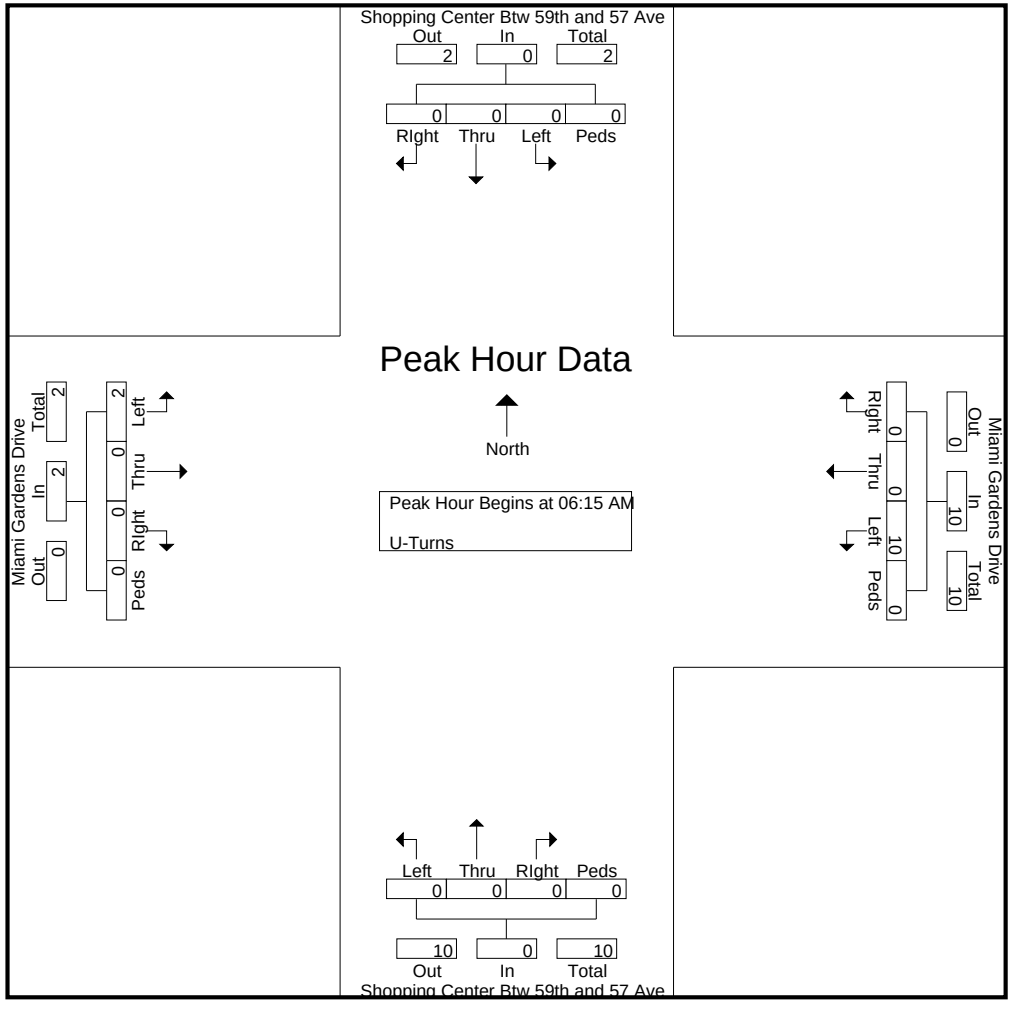

Miami Gardens Drive & Shopping Center Btw 56th & 57th Avenue

File Name : Miami Gardens Drive & Shopping Center Entrance (Btw 59th and 57th Avenue)
Site Code : 00000000
Start Date : 5/11/2016
Page No : 5

	Shopping Center Btw 59th and 57 Ave Southbound					Shopping Center Btw 59th and 57 Ave Northbound					Miami Gardens Drive Westbound					Miami Gardens Drive Eastbound					
Start Time	Left	Thru	RIght	Peds/Bike	App. Total	Left	Thru	RIght	Peds/Bike	App. Total	Left	Thru	RIght	Peds/Bike	App. Total	Left	Thru	RIght	Peds/Bike	App. Total	Int. Total
Peak Hour Analysis From 03:00 PM to 06:45 PM - Peak 1 of 1																					
Peak Hour for Entire Intersection Begins at 06:00 PM																					
06:00 PM	0	0	0	0	0	0	0	0	0	0	**11**	0	0	0	**11**	0	0	0	0	0	**11**
06:15 PM	0	0	0	0	0	0	0	0	0	0	9	0	0	0	9	**2**	0	0	0	**2**	11
06:30 PM	0	0	0	0	0	0	0	0	0	0	6	0	0	0	6	2	0	0	0	2	8
06:45 PM	0	0	0	0	0	0	0	0	0	0	5	0	0	0	5	0	0	0	0	0	5
Total Volume	0	0	0	0	0	0	0	0	0	0	31	0	0	0	31	4	0	0	0	4	35
% App. Total	0	0	0	0		0	0	0	0		100	0	0	0		100	0	0	0		
PHF	.000	.000	.000	.000	.000	.000	.000	.000	.000	.000	.705	.000	.000	.000	.705	.500	.000	.000	.000	.500	.795

Miami Gardens Drive & Shopping Center Btw 56th & 57th Avenue

File Name : Miami Gardens Drive & Shopping Center Entrance (Btw 59th and 57th Avenue)
Site Code : 00000000
Start Date : 5/11/2016
Page No : 6

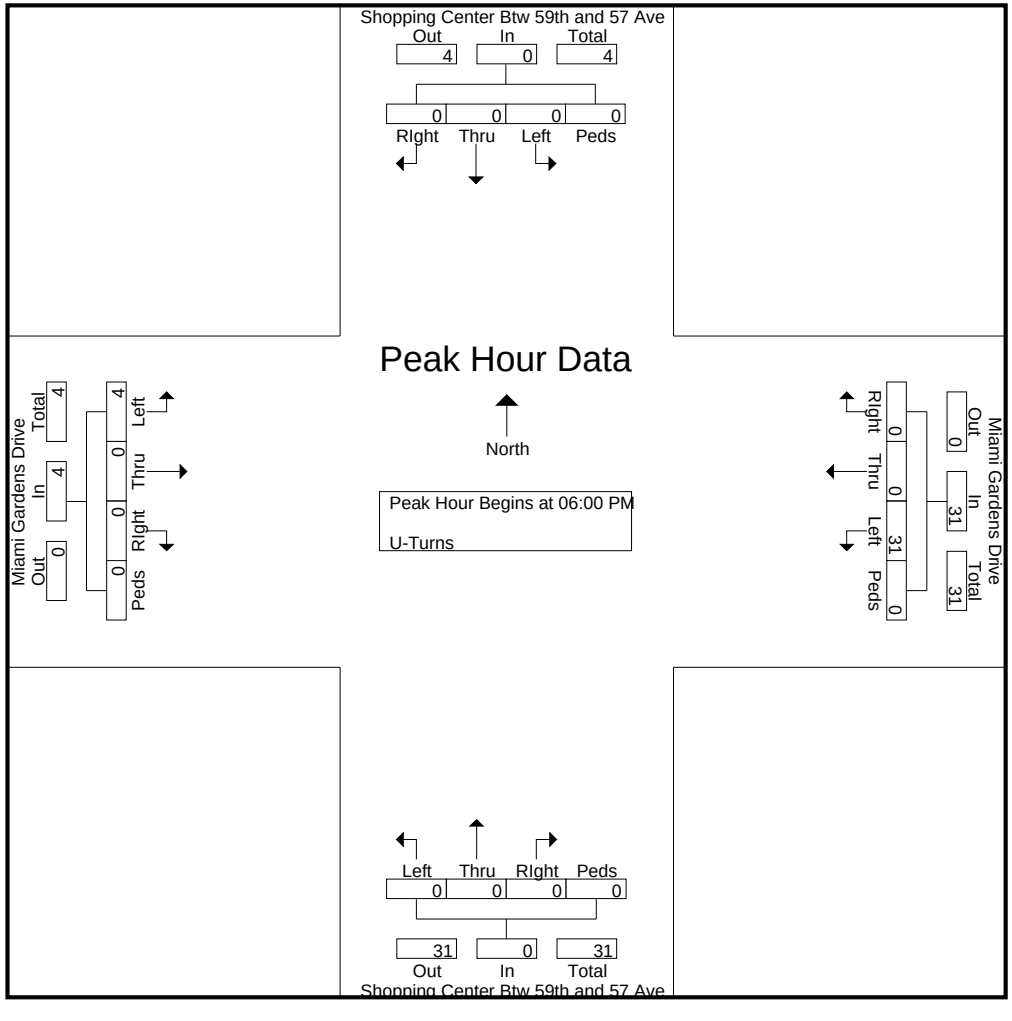

Miami Gardens Drive & Shopping Center Btw 56th & 57th Avenue

File Name : Miami Gardens Drive & Shopping Center Entrance (Btw 59th and 57th Avenue)
Site Code : 00000000
Start Date : 5/11/2016

Groups Printed- Veh - Trucks - Turns

	Shopping Center Btw 59th and 57 Ave Southbound					Shopping Center Btw 59th and 57 Ave Northbound					Miami Gardens Drive Westbound					Miami Gardens Drive Eastbound					
Start Time	Left	Thru	RIght	Peds/Bike	App. Total	Left	Thru	RIght	Peds/Bike	App. Total	Left	Thru	RIght	Peds/Bike	App. Total	Left	Thru	RIght	Peds/Bike	App. Total	Int. Total
06:00 AM	0	0	0	0	0	2	0	0	1	3	1	65	0	0	66	0	94	5	0	99	168
06:15 AM	0	0	0	0	0	3	0	2	0	5	6	137	0	0	143	0	139	4	0	143	291
06:30 AM	0	0	0	0	0	1	0	3	2	6	4	226	0	0	230	1	220	3	0	224	460
06:45 AM	0	0	0	0	0	1	0	1	2	4	10	219	0	0	229	1	209	10	0	220	453
Total	0	0	0	0	0	7	0	6	5	18	21	647	0	0	668	2	662	22	0	686	1372
07:00 AM	0	0	0	0	0	4	0	6	1	11	4	261	0	0	265	0	348	8	0	356	632
07:15 AM	0	0	0	0	0	0	0	4	0	4	2	265	0	0	267	1	376	7	0	384	655
07:30 AM	0	0	0	0	0	3	0	3	1	7	9	300	0	0	309	0	344	10	0	354	670
07:45 AM	0	0	0	0	0	5	0	5	0	10	5	298	0	0	303	0	291	8	0	299	612
Total	0	0	0	0	0	12	0	18	2	32	20	1124	0	0	1144	1	1359	33	0	1393	2569
08:00 AM	0	0	0	0	0	8	0	4	1	13	7	219	0	0	226	1	324	17	0	342	581
08:15 AM	0	0	0	0	0	6	0	14	0	20	8	297	0	0	305	1	327	26	0	354	679
08:30 AM	0	0	0	0	0	12	0	14	0	26	8	208	0	0	216	0	252	26	0	278	520
08:45 AM	0	0	0	0	0	14	0	7	0	21	6	232	0	0	238	3	191	17	0	211	470
Total	0	0	0	0	0	40	0	39	1	80	29	956	0	0	985	5	1094	86	0	1185	2250
*** BREAK ***																					
03:00 PM	0	0	0	0	0	11	0	23	4	38	17	260	0	0	277	0	243	27	2	272	587
03:15 PM	0	0	0	0	0	22	0	21	0	43	21	304	0	0	325	0	252	23	0	275	643
03:30 PM	0	0	0	0	0	33	0	23	3	59	8	278	0	0	286	0	247	29	0	276	621
03:45 PM	0	0	0	0	0	21	0	23	1	45	8	269	0	0	277	0	279	35	0	314	636
Total	0	0	0	0	0	87	0	90	8	185	54	1111	0	0	1165	0	1021	114	2	1137	2487
04:00 PM	0	0	0	0	0	20	0	31	3	54	9	268	0	0	277	1	279	21	0	301	632
04:15 PM	0	0	0	0	0	14	0	29	2	45	32	292	0	0	324	3	264	35	0	302	671
04:30 PM	0	0	0	0	0	22	0	30	1	53	11	240	0	0	251	1	217	29	0	247	551
04:45 PM	0	0	0	0	0	28	0	26	1	55	16	267	0	0	283	0	268	19	0	287	625
Total	0	0	0	0	0	84	0	116	7	207	68	1067	0	0	1135	5	1028	104	0	1137	2479
05:00 PM	0	0	0	0	0	20	0	28	2	50	26	295	0	0	321	0	227	37	0	264	635
05:15 PM	0	0	0	0	0	22	0	25	1	48	32	298	0	0	330	1	312	29	0	342	720
05:30 PM	0	0	0	0	0	17	0	25	2	44	13	321	0	0	334	0	298	30	0	328	706
05:45 PM	0	0	0	0	0	21	0	34	2	57	18	305	0	0	323	0	280	29	0	309	689
Total	0	0	0	0	0	80	0	112	7	199	89	1219	0	0	1308	1	1117	125	0	1243	2750
06:00 PM	0	0	0	0	0	32	0	35	0	67	26	327	0	0	353	0	281	25	0	306	726
06:15 PM	0	0	0	0	0	27	0	26	1	54	18	318	0	0	336	2	305	26	0	333	723
06:30 PM	0	0	0	0	0	20	0	31	1	52	18	338	0	0	356	2	314	29	0	345	753
06:45 PM	0	0	0	0	0	18	0	26	1	45	24	320	0	0	344	0	251	22	0	273	662
Total	0	0	0	0	0	97	0	118	3	218	86	1303	0	0	1389	4	1151	102	0	1257	2864
Grand Total	0	0	0	0	0	407	0	499	33	939	367	7427	0	0	7794	18	7432	586	2	8038	16771
Apprch %	0	0	0	0		43.3	0	53.1	3.5		4.7	95.3	0	0		0.2	92.5	7.3	0		
Total %	0	0	0	0	0	2.4	0	3	0.2	5.6	2.2	44.3	0	0	46.5	0.1	44.3	3.5	0	47.9	

Miami Gardens Drive & Shopping Center Btw 56th & 57th Avenue

File Name : Miami Gardens Drive & Shopping Center Entrance (Btw 59th and 57th Avenue)
Site Code : 00000000
Start Date : 5/11/2016
Page No : 2

Groups Printed- Veh - Trucks - Turns

	Shopping Center Btw 59th and 57 Ave Southbound					Shopping Center Btw 59th and 57 Ave Northbound					Miami Gardens Drive Westbound					Miami Gardens Drive Eastbound					
	Left	Thru	RIght	Peds/Bike	App. Total	Left	Thru	RIght	Peds/Bike	App. Total	Left	Thru	RIght	Peds/Bike	App. Total	Left	Thru	RIght	Peds/Bike	App. Total	Int. Total
Veh	0	0	0	0	0	403	0	488	16	907	254	7271	0	0	7525	3	7278	575	2	7858	16290
% Veh	0	0	0	0	0	99	0	97.8	48.5	96.6	69.2	97.9	0	0	96.5	16.7	97.9	98.1	100	97.8	97.1
Trucks	0	0	0	0	0	4	0	11	17	32	5	148	0	0	153	3	154	11	0	168	353
% Trucks	0	0	0	0	0	1	0	2.2	51.5	3.4	1.4	2	0	0	2	16.7	2.1	1.9	0	2.1	2.1
U-Turns	0	0	0	0	0	0	0	0	0	0	108	8	0	0	116	12	0	0	0	12	128
% U-Turns	0	0	0	0	0	0	0	0	0	0	29.4	0.1	0	0	1.5	66.7	0	0	0	0.1	0.8

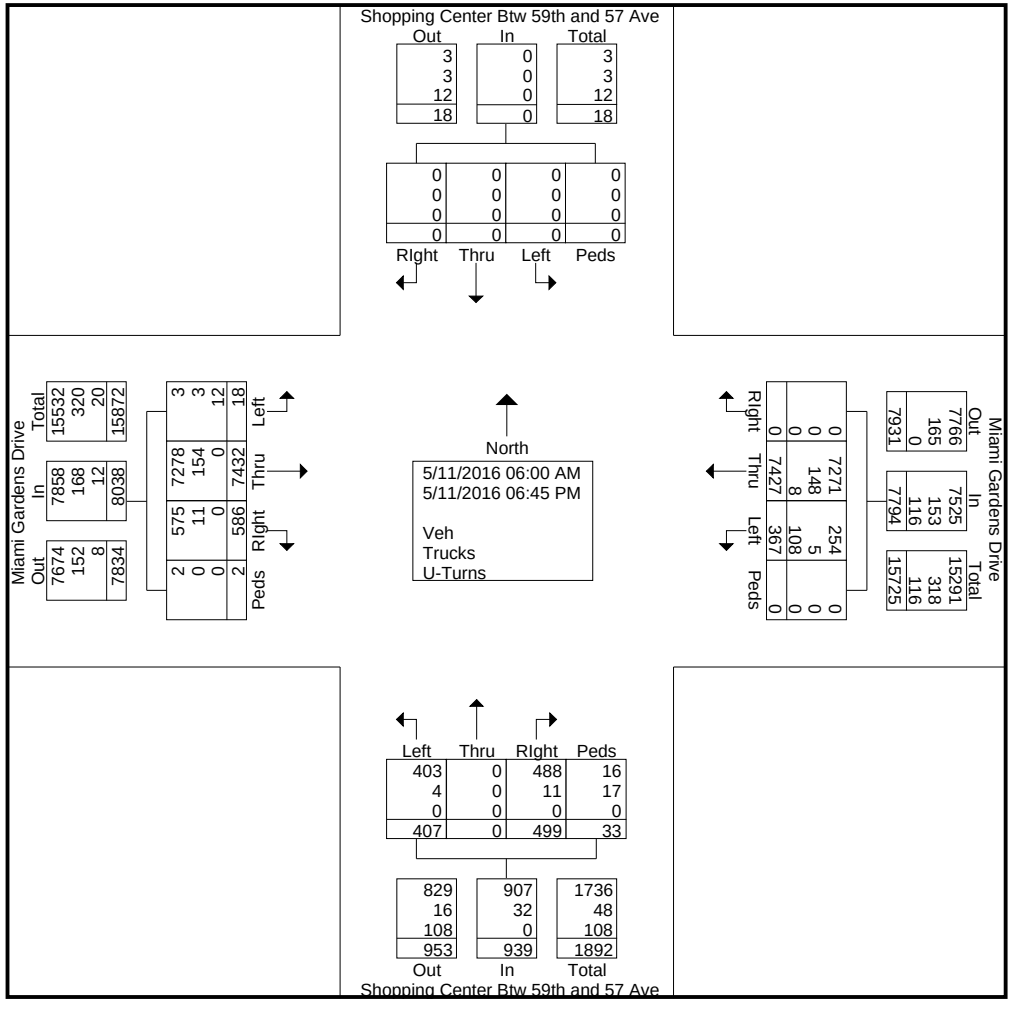

Miami Gardens Drive & Shopping Center Btw 56th & 57th Avenue

File Name : Miami Gardens Drive & Shopping Center Entrance (Btw 59th and 57th Avenue)
Site Code : 00000000
Start Date : 5/11/2016
Page No : 3

	Shopping Center Btw 59th and 57 Ave Southbound					Shopping Center Btw 59th and 57 Ave Northbound					Miami Gardens Drive Westbound					Miami Gardens Drive Eastbound					
Start Time	Left	Thru	RIght	Peds/Bike	App. Total	Left	Thru	RIght	Peds/Bike	App. Total	Left	Thru	RIght	Peds/Bike	App. Total	Left	Thru	RIght	Peds/Bike	App. Total	Int. Total
Peak Hour Analysis From 06:00 AM to 08:45 AM - Peak 1 of 1																					
Peak Hour for Entire Intersection Begins at 07:00 AM																					
07:00 AM	0	0	0	0	0	4	0	**6**	**1**	**11**	4	261	0	0	265	0	348	8	0	356	632
07:15 AM	0	0	0	0	0	0	0	4	0	4	2	265	0	0	267	**1**	**376**	7	0	**384**	655
07:30 AM	0	0	0	0	0	3	0	3	1	7	**9**	**300**	0	0	**309**	0	344	**10**	0	354	**670**
07:45 AM	0	0	0	0	0	**5**	0	5	0	10	5	298	0	0	303	0	291	8	0	299	612
Total Volume	0	0	0	0	0	12	0	18	2	32	20	1124	0	0	1144	1	1359	33	0	1393	2569
% App. Total	0	0	0	0		37.5	0	56.2	6.2		1.7	98.3	0	0		0.1	97.6	2.4	0		
PHF	.000	.000	.000	.000	.000	.600	.000	.750	.500	.727	.556	.937	.000	.000	.926	.250	.904	.825	.000	.907	.959

Miami Gardens Drive & Shopping Center Btw 56th & 57th Avenue

File Name : Miami Gardens Drive & Shopping Center Entrance (Btw 59th and 57th Avenue)
Site Code : 00000000
Start Date : 5/11/2016
Page No : 4

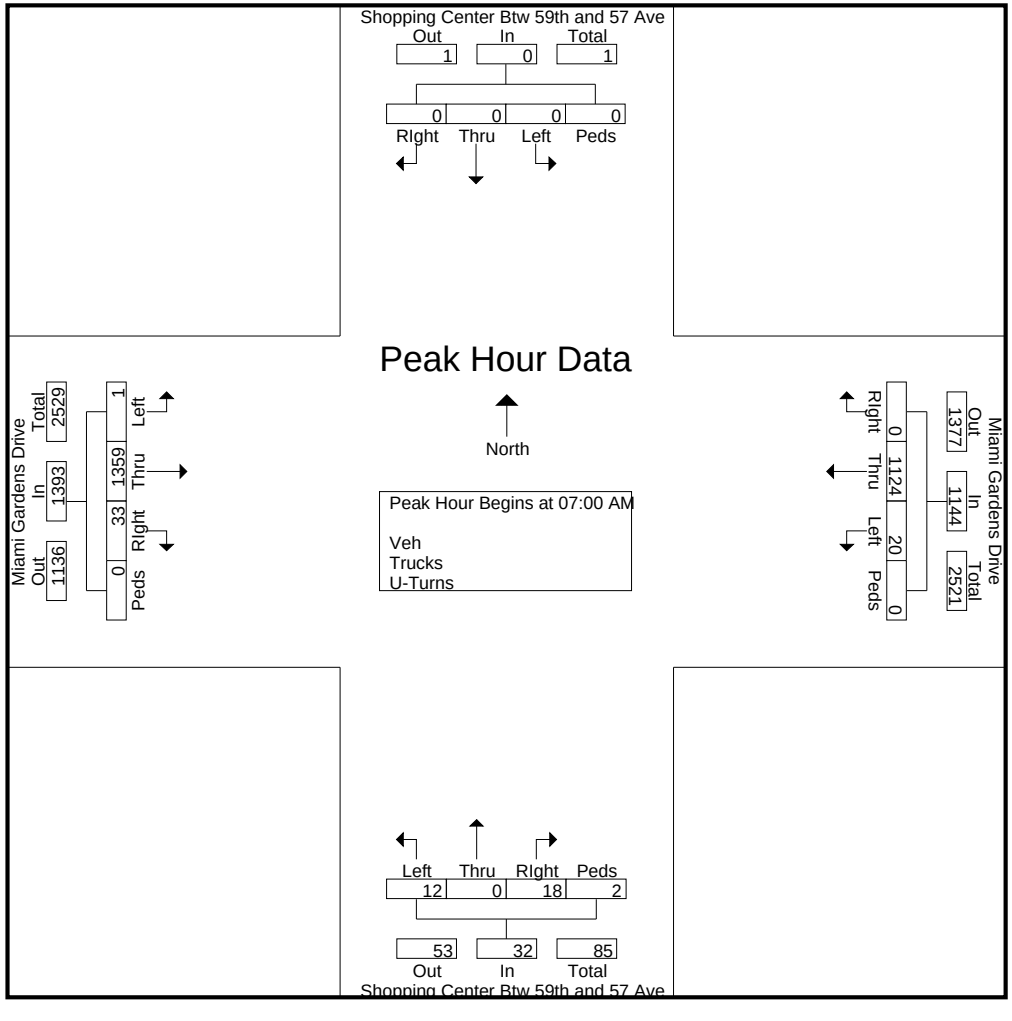

Miami Gardens Drive & Shopping Center Btw 56th & 57th Avenue

File Name : Miami Gardens Drive & Shopping Center Entrance (Btw 59th and 57th Avenue)
Site Code : 00000000
Start Date : 5/11/2016
Page No : 5

	Shopping Center Btw 59th and 57 Ave Southbound					Shopping Center Btw 59th and 57 Ave Northbound					Miami Gardens Drive Westbound					Miami Gardens Drive Eastbound					
Start Time	Left	Thru	RIght	Peds/Bike	App. Total	Left	Thru	RIght	Peds/Bike	App. Total	Left	Thru	RIght	Peds/Bike	App. Total	Left	Thru	RIght	Peds/Bike	App. Total	Int. Total
Peak Hour Analysis From 03:00 PM to 06:45 PM - Peak 1 of 1																					
Peak Hour for Entire Intersection Begins at 05:45 PM																					
05:45 PM	0	0	0	0	0	21	0	34	**2**	57	18	305	0	0	323	0	280	**29**	0	309	689
06:00 PM	0	0	0	0	0	**32**	0	**35**	0	**67**	**26**	327	0	0	353	0	281	25	0	306	726
06:15 PM	0	0	0	0	0	27	0	26	1	54	18	318	0	0	336	**2**	305	26	0	333	723
06:30 PM	0	0	0	0	0	20	0	31	1	52	18	**338**	0	0	**356**	2	**314**	29	0	**345**	**753**
Total Volume	0	0	0	0	0	100	0	126	4	230	80	1288	0	0	1368	4	1180	109	0	1293	2891
% App. Total	0	0	0	0		43.5	0	54.8	1.7		5.8	94.2	0	0		0.3	91.3	8.4	0		
PHF	.000	.000	.000	.000	.000	.781	.000	.900	.500	.858	.769	.953	.000	.000	.961	.500	.939	.940	.000	.937	.960

Miami Gardens Drive & Shopping Center Btw 56th & 57th Avenue

File Name : Miami Gardens Drive & Shopping Center Entrance (Btw 59th and 57th Avenue)
Site Code : 00000000
Start Date : 5/11/2016
Page No : 6

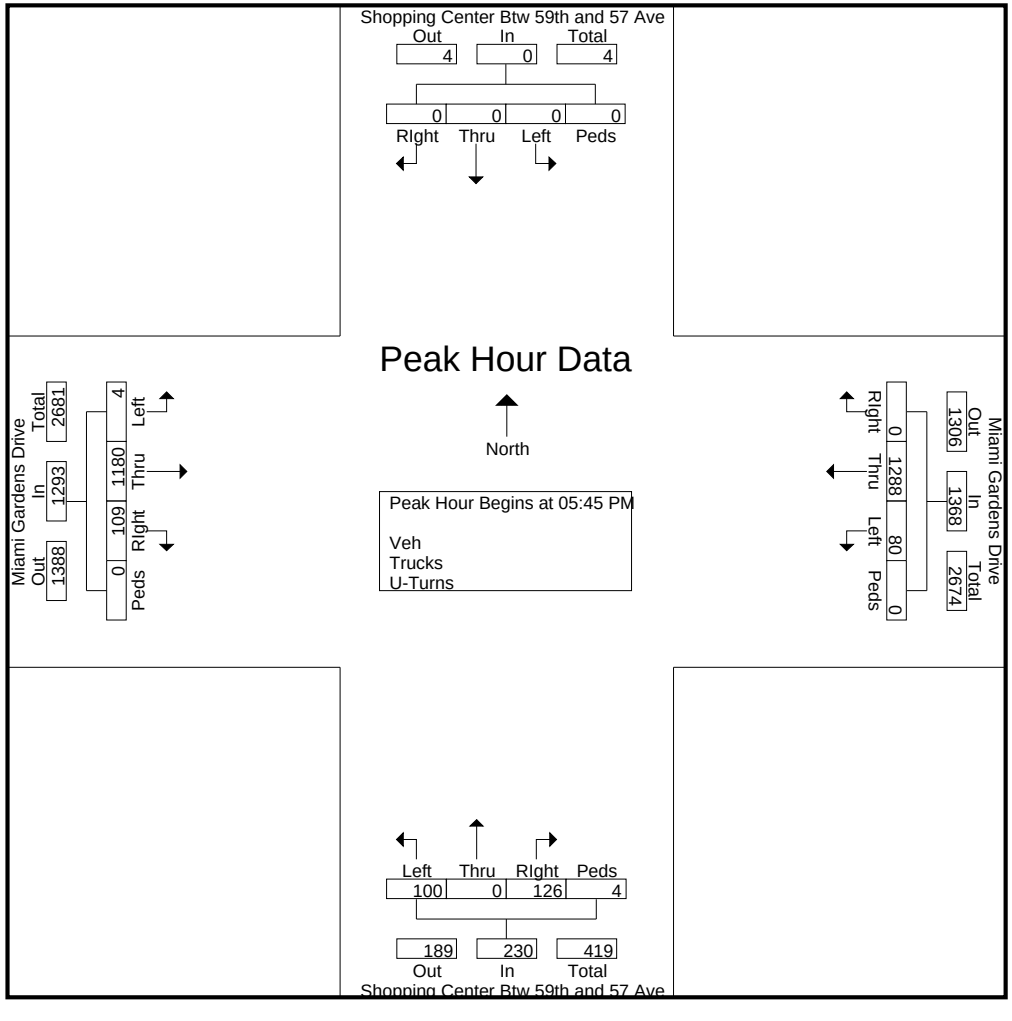

Miami Gardens Drive & NW 57th Avenue

File Name : Miami Gardens Drive & NW 57th Avenue
Site Code : 00000000
Start Date : 5/11/2016
Page No : 1

Groups Printed- Trucks

	NW 57th Avenue Southbound					NW 57th Avenue Northbound					Miami Gardens Drive Westbound					Miami Gardens Drive Eastbound					
Start Time	Left	Thru	RIght	Bikes	App. Total	Left	Thru	RIght	Bikes	App. Total	Left	Thru	RIght	Bikes	App. Total	Left	Thru	RIght	Bikes	App. Total	Int. Total
06:00 AM	0	4	0	0	4	2	1	0	0	3	0	2	0	0	2	0	1	1	0	2	11
06:15 AM	2	2	1	0	5	2	6	3	0	11	0	4	1	0	5	3	3	1	0	7	28
06:30 AM	1	4	0	0	5	2	1	0	3	6	0	3	0	0	3	2	4	5	0	11	25
06:45 AM	0	5	2	0	7	1	10	0	0	11	1	5	0	0	6	1	4	0	0	5	29
Total	3	15	3	0	21	7	18	3	3	31	1	14	1	0	16	6	12	7	0	25	93
07:00 AM	1	3	2	0	6	0	3	1	1	5	0	2	0	0	2	2	7	0	0	9	22
07:15 AM	1	0	1	2	4	1	11	0	0	12	1	4	1	0	6	1	4	1	0	6	28
07:30 AM	3	6	1	0	10	2	4	0	0	6	0	3	1	0	4	3	2	0	0	5	25
07:45 AM	0	8	0	0	8	0	5	2	1	8	0	3	0	2	5	0	5	0	0	5	26
Total	5	17	4	2	28	3	23	3	2	31	1	12	2	2	17	6	18	1	0	25	101
08:00 AM	3	8	0	0	11	1	5	0	0	6	1	1	1	0	3	0	2	1	0	3	23
08:15 AM	2	6	0	0	8	1	1	0	0	2	1	4	1	0	6	1	4	0	0	5	21
08:30 AM	1	8	1	1	11	1	4	0	0	5	1	1	0	0	2	1	2	1	0	4	22
08:45 AM	2	7	0	0	9	0	10	1	0	11	0	5	0	0	5	1	4	1	0	6	31
Total	8	29	1	1	39	3	20	1	0	24	3	11	2	0	16	3	12	3	0	18	97
*** BREAK ***																					
03:00 PM	2	9	0	0	11	1	2	1	0	4	2	1	1	0	4	2	2	0	0	4	23
03:15 PM	5	1	2	1	9	0	2	1	0	3	0	3	1	0	4	1	2	1	0	4	20
03:30 PM	2	8	3	0	13	0	1	0	0	1	0	2	1	0	3	0	3	1	0	4	21
03:45 PM	0	4	0	1	5	1	1	1	0	3	1	2	0	0	3	1	2	0	0	3	14
Total	9	22	5	2	38	2	6	3	0	11	3	8	3	0	14	4	9	2	0	15	78
04:00 PM	0	7	0	0	7	0	3	1	2	6	0	2	1	0	3	2	2	0	0	4	20
04:15 PM	4	1	0	0	5	0	8	1	0	9	0	3	0	0	3	1	6	1	1	9	26
04:30 PM	1	8	1	0	10	4	1	0	1	6	2	0	0	0	2	2	2	0	1	5	23
04:45 PM	2	4	0	0	6	0	0	0	0	0	0	2	0	0	2	2	4	0	0	6	14
Total	7	20	1	0	28	4	12	2	3	21	2	7	1	0	10	7	14	1	2	24	83
05:00 PM	0	2	0	0	2	0	1	1	1	3	0	4	0	0	4	0	2	1	0	3	12
05:15 PM	2	7	0	0	9	1	1	0	0	2	0	2	0	0	2	0	1	0	0	1	14
05:30 PM	0	1	1	0	2	0	0	0	1	1	0	1	1	0	2	0	4	0	0	4	9
05:45 PM	1	2	0	0	3	0	0	0	0	0	0	1	0	0	1	0	0	0	0	0	4
Total	3	12	1	0	16	1	2	1	2	6	0	8	1	0	9	0	7	1	0	8	39
06:00 PM	1	1	0	1	3	0	0	0	0	0	0	3	1	0	4	0	2	0	0	2	9
06:15 PM	4	1	1	0	6	0	0	0	0	0	0	2	0	0	2	0	1	0	0	1	9
06:30 PM	1	1	0	2	4	1	0	1	0	2	0	3	0	0	3	0	3	1	0	4	13
06:45 PM	1	1	0	1	3	0	0	0	0	0	0	3	0	0	3	0	2	2	1	5	11
Total	7	4	1	4	16	1	0	1	0	2	0	11	1	0	12	0	8	3	1	12	42
Grand Total	42	119	16	9	186	21	81	14	10	126	10	71	11	2	94	26	80	18	3	127	533
Apprch %	22.6	64	8.6	4.8		16.7	64.3	11.1	7.9		10.6	75.5	11.7	2.1		20.5	63	14.2	2.4		
Total %	7.9	22.3	3	1.7	34.9	3.9	15.2	2.6	1.9	23.6	1.9	13.3	2.1	0.4	17.6	4.9	15	3.4	0.6	23.8	

Miami Gardens Drive & NW 57th Avenue

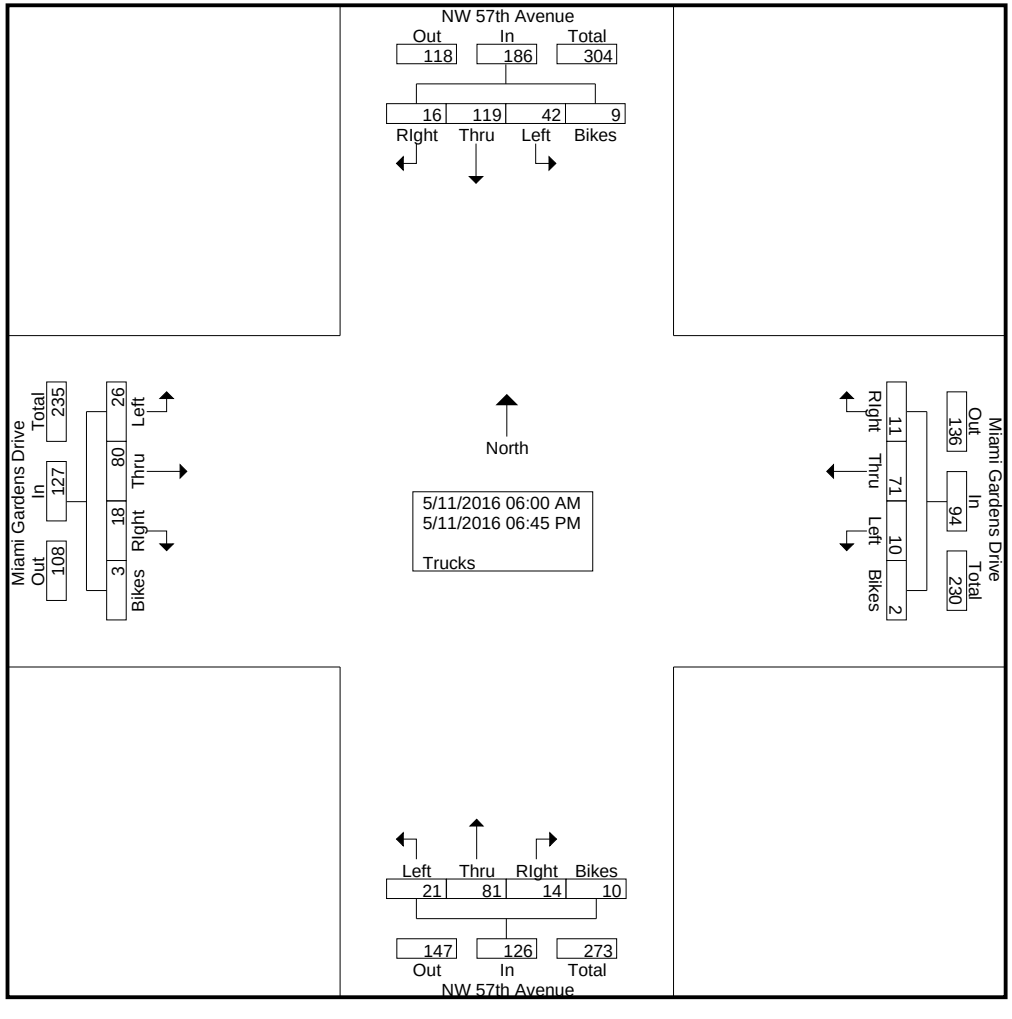

Miami Gardens Drive & NW 57th Avenue

File Name : Miami Gardens Drive & NW 57th Avenue
Site Code : 00000000
Start Date : 5/11/2016
Page No : 3

	NW 57th Avenue Southbound					NW 57th Avenue Northbound					Miami Gardens Drive Westbound					Miami Gardens Drive Eastbound					
Start Time	Left	Thru	RIght	Bikes	App. Total	Left	Thru	RIght	Bikes	App. Total	Left	Thru	RIght	Bikes	App. Total	Left	Thru	RIght	Bikes	App. Total	Int. Total
Peak Hour Analysis From 06:00 AM to 08:45 AM - Peak 1 of 1																					
Peak Hour for Entire Intersection Begins at 06:15 AM																					
06:15 AM	**2**	2	1	0	5	**2**	6	**3**	0	**11**	0	4	**1**	0	5	**3**	3	1	0	7	28
06:30 AM	1	4	0	0	5	2	1	0	**3**	6	0	3	0	0	3	2	4	**5**	0	**11**	25
06:45 AM	0	**5**	**2**	0	**7**	1	**10**	0	0	11	**1**	**5**	0	0	**6**	1	4	0	0	5	**29**
07:00 AM	1	3	2	0	6	0	3	1	1	5	0	2	0	0	2	2	**7**	0	0	9	22
Total Volume	4	14	5	0	23	5	20	4	4	33	1	14	1	0	16	8	18	6	0	32	104
% App. Total	17.4	60.9	21.7	0		15.2	60.6	12.1	12.1		6.2	87.5	6.2	0		25	56.2	18.8	0		
PHF	.500	.700	.625	.000	.821	.625	.500	.333	.333	.750	.250	.700	.250	.000	.667	.667	.643	.300	.000	.727	.897

Miami Gardens Drive & NW 57th Avenue

File Name : Miami Gardens Drive & NW 57th Avenue
Site Code : 00000000
Start Date : 5/11/2016
Page No : 4

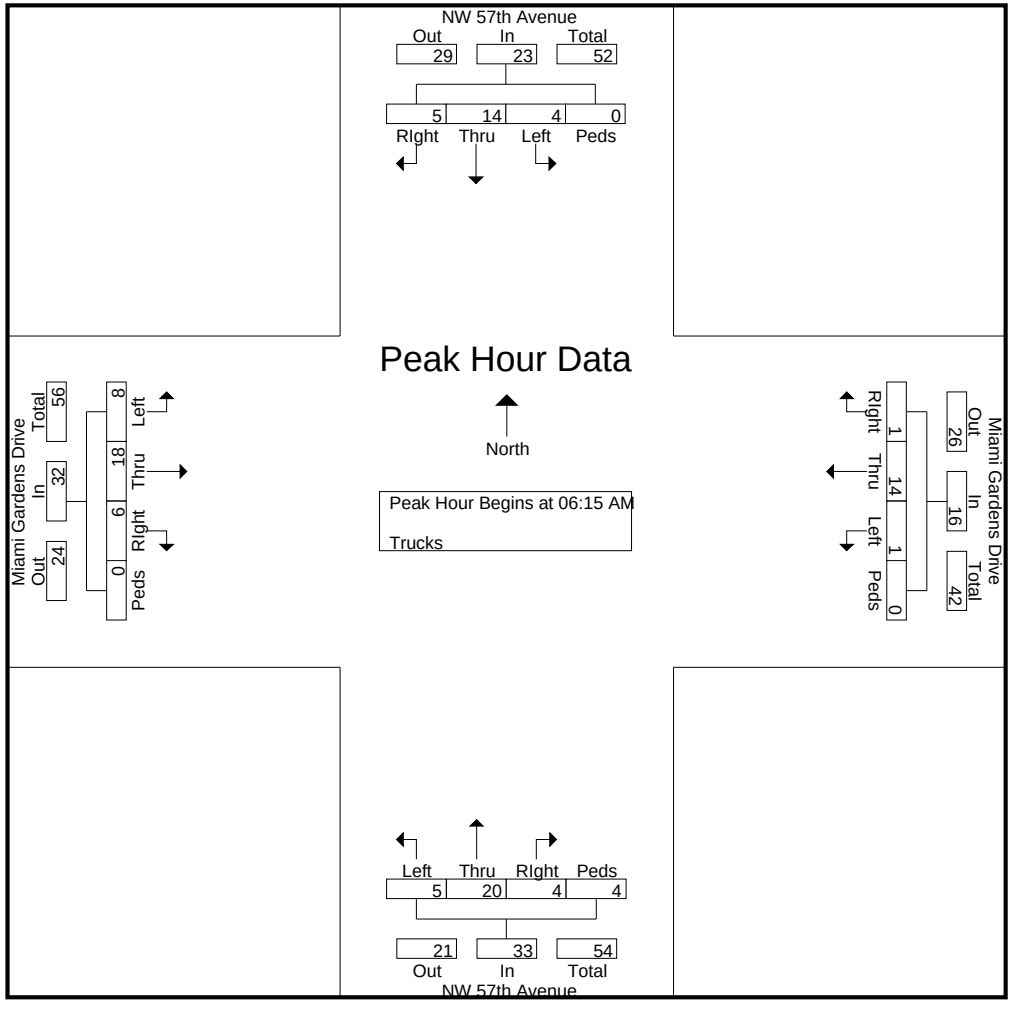

Miami Gardens Drive & NW 57th Avenue

File Name : Miami Gardens Drive & NW 57th Avenue
Site Code : 00000000
Start Date : 5/11/2016
Page No : 5

	NW 57th Avenue Southbound					NW 57th Avenue Northbound					Miami Gardens Drive Westbound					Miami Gardens Drive Eastbound					
Start Time	Left	Thru	RIght	Bikes	App. Total	Left	Thru	RIght	Bikes	App. Total	Left	Thru	RIght	Bikes	App. Total	Left	Thru	RIght	Bikes	App. Total	Int. Total
Peak Hour Analysis From 03:00 PM to 06:45 PM - Peak 1 of 1																					
Peak Hour for Entire Intersection Begins at 03:45 PM																					
03:45 PM	0	4	0	**1**	5	1	1	**1**	0	3	1	2	0	0	**3**	1	2	0	0	3	14
04:00 PM	0	7	0	0	7	0	3	1	**2**	6	0	2	**1**	0	3	**2**	2	0	0	4	20
04:15 PM	**4**	1	0	0	5	0	**8**	1	0	**9**	0	**3**	0	0	3	1	**6**	**1**	**1**	**9**	**26**
04:30 PM	1	**8**	**1**	0	**10**	**4**	1	0	1	6	**2**	0	0	0	2	2	2	0	1	5	23
Total Volume	5	20	1	1	27	5	13	3	3	24	3	7	1	0	11	6	12	1	2	21	83
% App. Total	18.5	74.1	3.7	3.7		20.8	54.2	12.5	12.5		27.3	63.6	9.1	0		28.6	57.1	4.8	9.5		
PHF	.313	.625	.250	.250	.675	.313	.406	.750	.375	.667	.375	.583	.250	.000	.917	.750	.500	.250	.500	.583	.798

Miami Gardens Drive & NW 57th Avenue

File Name : Miami Gardens Drive & NW 57th Avenue
Site Code : 00000000
Start Date : 5/11/2016
Page No : 6

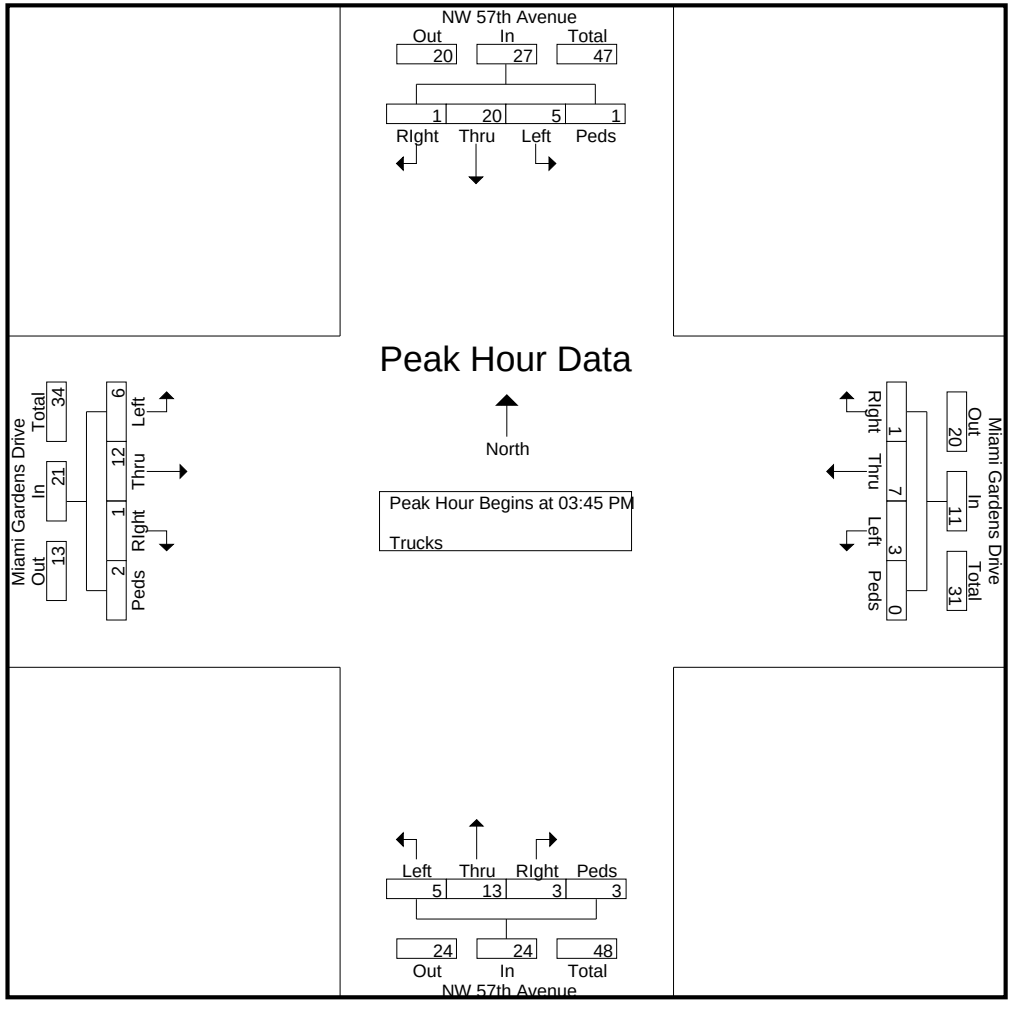

Miami Gardens Drive & NW 57th Avenue

File Name : Miami Gardens Drive & NW 57th Avenue
Site Code : 00000000
Start Date : 5/11/2016
Page No : 1

Groups Printed- Turns

	NW 57th Avenue Southbound					NW 57th Avenue Northbound					Miami Gardens Drive Westbound					Miami Gardens Drive Eastbound					
Start Time	Left	Thru	RIght	Peds/Bike	App. Total	Left	Thru	RIght	Peds/Bike	App. Total	Left	Thru	RIght	Peds/Bike	App. Total	Left	Thru	RIght	Peds/Bike	App. Total	Int. Total
06:00 AM	0	0	0	0	0	1	0	0	0	1	2	0	0	0	2	2	0	0	0	2	5
06:15 AM	0	0	0	0	0	0	0	0	0	0	0	0	0	0	0	1	0	0	0	1	1
06:30 AM	3	0	0	0	3	0	0	0	0	0	1	0	0	0	1	4	0	0	0	4	8
06:45 AM	4	0	0	0	4	0	0	0	0	0	0	0	0	0	0	3	0	0	0	3	7
Total	7	0	0	0	7	1	0	0	0	1	3	0	0	0	3	10	0	0	0	10	21
*** BREAK ***																					
07:15 AM	1	0	0	0	1	0	0	0	0	0	2	0	0	0	2	4	0	0	0	4	7
07:30 AM	0	0	0	0	0	0	0	0	0	0	3	0	0	0	3	1	0	0	0	1	4
07:45 AM	0	0	0	0	0	0	0	0	0	0	2	0	0	0	2	6	0	0	0	6	8
Total	1	0	0	0	1	0	0	0	0	0	7	0	0	0	7	11	0	0	0	11	19
08:00 AM	3	0	0	0	3	0	0	0	0	0	1	0	0	0	1	2	0	0	0	2	6
08:15 AM	0	0	0	0	0	0	0	0	0	0	4	0	0	0	4	5	0	0	0	5	9
08:30 AM	2	0	0	0	2	1	0	0	0	1	15	0	0	0	15	8	0	0	0	8	26
08:45 AM	1	0	0	0	1	0	0	0	0	0	14	0	0	0	14	11	0	0	0	11	26
Total	6	0	0	0	6	1	0	0	0	1	34	0	0	0	34	26	0	0	0	26	67
*** BREAK ***																					
03:00 PM	2	0	0	0	2	0	0	0	0	0	11	0	0	0	11	8	0	0	0	8	21
03:15 PM	3	0	0	0	3	0	0	0	0	0	7	0	0	0	7	19	0	0	0	19	29
03:30 PM	0	0	0	0	0	0	0	0	0	0	4	0	0	0	4	13	0	0	0	13	17
03:45 PM	1	0	0	0	1	3	0	0	0	3	15	0	0	0	15	17	0	0	0	17	36
Total	6	0	0	0	6	3	0	0	0	3	37	0	0	0	37	57	0	0	0	57	103
04:00 PM	2	0	0	0	2	3	0	0	0	3	12	0	0	0	12	12	0	0	0	12	29
04:15 PM	0	0	0	0	0	0	0	0	0	0	7	0	0	0	7	7	0	0	0	7	14
04:30 PM	2	0	0	0	2	1	0	0	0	1	18	0	0	0	18	19	0	0	0	19	40
04:45 PM	2	0	0	0	2	0	0	0	0	0	4	0	0	0	4	22	0	0	0	22	28
Total	6	0	0	0	6	4	0	0	0	4	41	0	0	0	41	60	0	0	0	60	111
05:00 PM	0	0	0	0	0	0	0	0	0	0	7	0	0	0	7	14	0	0	0	14	21
05:15 PM	2	0	0	0	2	0	0	0	0	0	6	0	0	0	6	13	0	0	0	13	21
05:30 PM	2	0	0	0	2	0	0	0	0	0	11	0	0	0	11	19	0	0	0	19	32
05:45 PM	1	0	0	0	1	0	0	0	0	0	12	0	0	0	12	19	0	0	0	19	32
Total	5	0	0	0	5	0	0	0	0	0	36	0	0	0	36	65	0	0	0	65	106
06:00 PM	3	0	0	0	3	0	0	0	0	0	9	0	0	0	9	17	0	0	0	17	29
06:15 PM	5	0	0	0	5	0	0	0	0	0	4	0	0	0	4	19	0	0	0	19	28
06:30 PM	3	0	0	0	3	0	0	0	0	0	5	0	0	0	5	15	0	0	0	15	23
06:45 PM	2	0	0	0	2	0	0	0	0	0	6	0	0	0	6	12	0	0	0	12	20
Total	13	0	0	0	13	0	0	0	0	0	24	0	0	0	24	63	0	0	0	63	100
Grand Total	44	0	0	0	44	9	0	0	0	9	182	0	0	0	182	292	0	0	0	292	527
Apprch %	100	0	0	0		100	0	0	0		100	0	0	0		100	0	0	0		
Total %	8.3	0	0	0	8.3	1.7	0	0	0	1.7	34.5	0	0	0	34.5	55.4	0	0	0	55.4	

Miami Gardens Drive & NW 57th Avenue

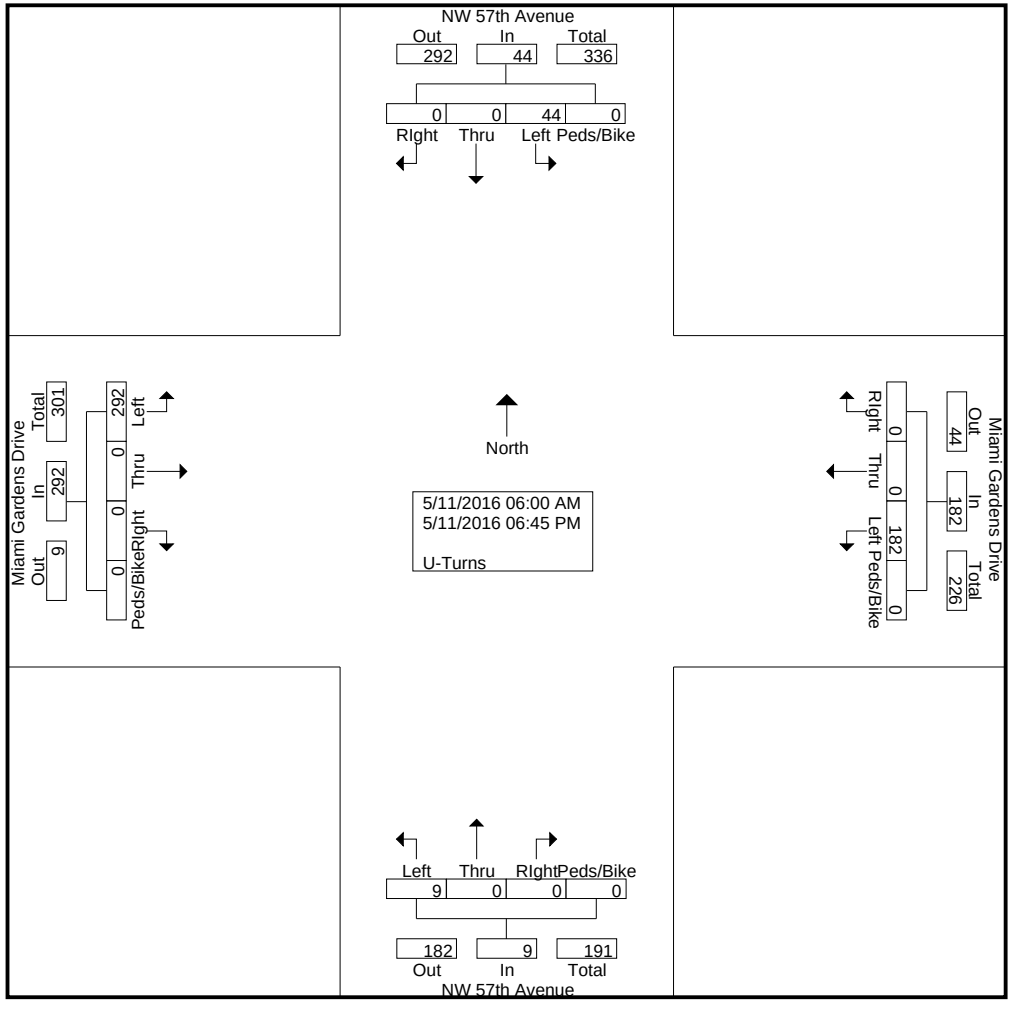

Miami Gardens Drive & NW 57th Avenue

File Name : Miami Gardens Drive & NW 57th Avenue
Site Code : 00000000
Start Date : 5/11/2016
Page No : 3

	NW 57th Avenue Southbound					NW 57th Avenue Northbound					Miami Gardens Drive Westbound					Miami Gardens Drive Eastbound					
Start Time	Left	Thru	RIght	Peds/Bike	App. Total	Left	Thru	RIght	Peds/Bike	App. Total	Left	Thru	RIght	Peds/Bike	App. Total	Left	Thru	RIght	Peds/Bike	App. Total	Int. Total
Peak Hour Analysis From 06:00 AM to 08:45 AM - Peak 1 of 1																					
Peak Hour for Entire Intersection Begins at 08:00 AM																					
08:00 AM	**3**	0	0	0	**3**	0	0	0	0	0	1	0	0	0	1	2	0	0	0	2	6
08:15 AM	0	0	0	0	0	0	0	0	0	0	4	0	0	0	4	5	0	0	0	5	9
08:30 AM	2	0	0	0	2	**1**	0	0	0	**1**	**15**	0	0	0	**15**	8	0	0	0	8	**26**
08:45 AM	1	0	0	0	1	0	0	0	0	0	14	0	0	0	14	**11**	0	0	0	**11**	26
Total Volume	6	0	0	0	6	1	0	0	0	1	34	0	0	0	34	26	0	0	0	26	67
% App. Total	100	0	0	0		100	0	0	0		100	0	0	0		100	0	0	0		
PHF	.500	.000	.000	.000	.500	.250	.000	.000	.000	.250	.567	.000	.000	.000	.567	.591	.000	.000	.000	.591	.644

Miami Gardens Drive & NW 57th Avenue

File Name : Miami Gardens Drive & NW 57th Avenue
Site Code : 00000000
Start Date : 5/11/2016
Page No : 4

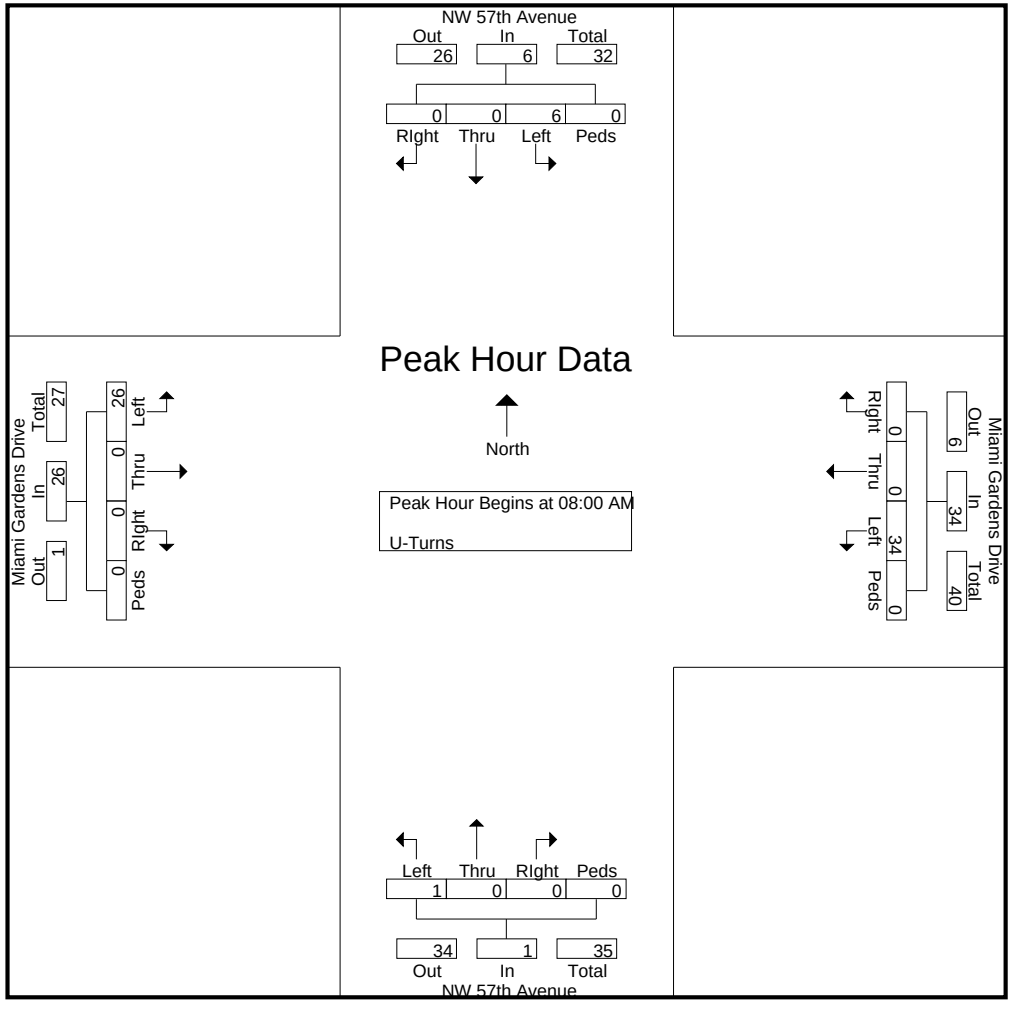

Miami Gardens Drive & NW 57th Avenue

File Name : Miami Gardens Drive & NW 57th Avenue
Site Code : 00000000
Start Date : 5/11/2016
Page No : 5

	NW 57th Avenue Southbound					NW 57th Avenue Northbound					Miami Gardens Drive Westbound					Miami Gardens Drive Eastbound					
Start Time	Left	Thru	RIght	Peds/Bike	App. Total	Left	Thru	RIght	Peds/Bike	App. Total	Left	Thru	RIght	Peds/Bike	App. Total	Left	Thru	RIght	Peds/Bike	App. Total	Int. Total
Peak Hour Analysis From 03:00 PM to 06:45 PM - Peak 1 of 1																					
Peak Hour for Entire Intersection Begins at 05:30 PM																					
05:30 PM	2	0	0	0	2	0	0	0	0	0	11	0	0	0	11	**19**	0	0	0	**19**	**32**
05:45 PM	1	0	0	0	1	0	0	0	0	0	**12**	0	0	0	**12**	19	0	0	0	19	32
06:00 PM	3	0	0	0	3	0	0	0	0	0	9	0	0	0	9	17	0	0	0	17	29
06:15 PM	**5**	0	0	0	**5**	0	0	0	0	0	4	0	0	0	4	19	0	0	0	19	28
Total Volume	11	0	0	0	11	0	0	0	0	0	36	0	0	0	36	74	0	0	0	74	121
% App. Total	100	0	0	0		0	0	0	0		100	0	0	0		100	0	0	0		
PHF	.550	.000	.000	.000	.550	.000	.000	.000	.000	.000	.750	.000	.000	.000	.750	.974	.000	.000	.000	.974	.945

Miami Gardens Drive & NW 57th Avenue

File Name : Miami Gardens Drive & NW 57th Avenue
Site Code : 00000000
Start Date : 5/11/2016
Page No : 6

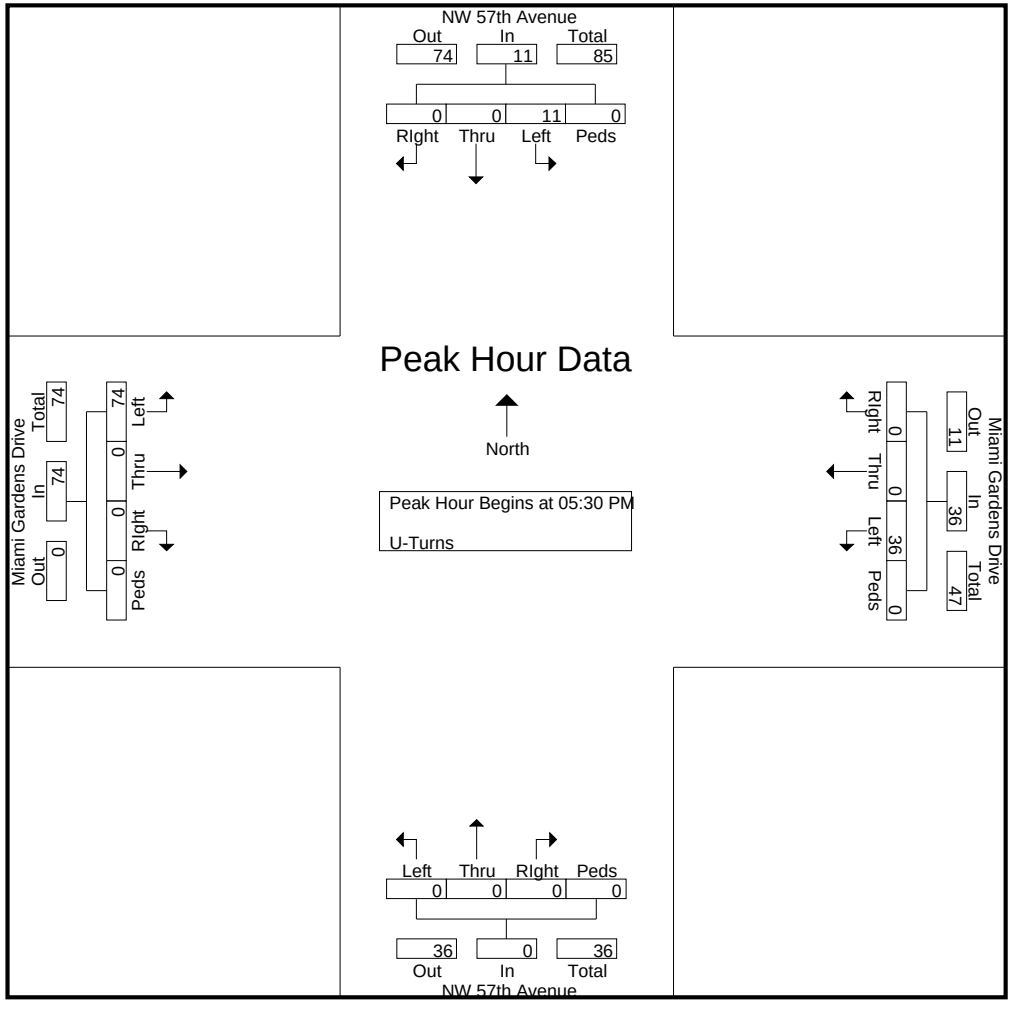

Miami Gardens Drive & NW 57th Avenue

File Name : Miami Gardens Drive & NW 57th Avenue
Site Code : 00000000
Start Date : 5/11/2016
Page No : 1

Groups Printed- Veh - Trucks - Turns

	NW 57th Avenue Southbound					NW 57th Avenue Northbound					Miami Gardens Drive Westbound					Miami Gardens Drive Eastbound					
Start Time	Left	Thru	RIght	Peds/Bike	App. Total	Left	Thru	RIght	Peds/Bike	App. Total	Left	Thru	RIght	Peds/Bike	App. Total	Left	Thru	RIght	Peds/Bike	App. Total	Int. Total
06:00 AM	30	304	11	0	345	15	120	6	0	141	30	50	11	0	91	22	58	29	0	109	686
06:15 AM	35	416	28	0	479	29	123	19	0	171	56	80	19	0	155	36	77	30	0	143	948
06:30 AM	36	453	23	0	512	36	186	8	5	235	55	154	31	1	241	54	127	62	2	245	1233
06:45 AM	44	501	65	0	610	38	282	23	1	344	46	131	39	0	216	50	143	50	0	243	1413
Total	145	1674	127	0	1946	118	711	56	6	891	187	415	100	1	703	162	405	171	2	740	4280
07:00 AM	77	447	59	1	584	50	251	20	1	322	29	170	24	0	223	85	219	58	0	362	1491
07:15 AM	78	423	53	2	556	73	300	35	0	408	42	121	51	0	214	87	244	47	0	378	1556
07:30 AM	121	382	54	0	557	52	308	29	0	389	55	206	39	0	300	103	197	57	0	357	1603
07:45 AM	81	422	54	2	559	62	397	37	5	501	67	181	39	3	290	87	164	53	0	304	1654
Total	357	1674	220	5	2256	237	1256	121	6	1620	193	678	153	3	1027	362	824	215	0	1401	6304
08:00 AM	100	359	39	0	498	84	264	19	2	369	38	119	42	0	199	88	188	62	0	338	1404
08:15 AM	73	330	42	3	448	56	297	37	2	392	52	192	33	2	279	80	200	58	0	338	1457
08:30 AM	75	335	39	2	451	55	253	28	6	342	76	140	36	4	256	90	138	53	0	281	1330
08:45 AM	55	396	58	1	510	66	300	45	3	414	93	135	40	2	270	65	116	30	0	211	1405
Total	303	1420	178	6	1907	261	1114	129	13	1517	259	586	151	8	1004	323	642	203	0	1168	5596
*** BREAK ***																					
03:00 PM	52	275	40	2	369	88	336	56	2	482	80	140	38	0	258	91	126	63	3	283	1392
03:15 PM	85	244	52	2	383	127	288	43	1	459	59	165	38	0	262	84	171	49	1	305	1409
03:30 PM	62	264	70	2	398	91	431	52	3	577	47	140	47	0	234	79	151	51	0	281	1490
03:45 PM	67	207	40	5	319	120	356	62	0	538	72	125	43	0	240	74	193	39	0	306	1403
Total	266	990	202	11	1469	426	1411	213	6	2056	258	570	166	0	994	328	641	202	4	1175	5694
04:00 PM	55	235	46	0	336	80	406	73	2	561	73	156	67	0	296	97	171	47	0	315	1508
04:15 PM	64	274	58	0	396	118	430	73	2	623	69	178	42	0	289	87	176	50	1	314	1622
04:30 PM	67	237	34	1	339	128	403	61	1	593	75	121	58	0	254	79	136	51	1	267	1453
04:45 PM	80	207	41	0	328	121	349	73	3	546	63	129	59	0	251	90	159	45	1	295	1420
Total	266	953	179	1	1399	447	1588	280	8	2323	280	584	226	0	1090	353	642	193	3	1191	6003
05:00 PM	56	284	54	1	395	107	446	66	1	620	68	153	61	0	282	70	171	38	1	280	1577
05:15 PM	90	290	67	0	447	130	383	49	1	563	53	163	87	0	303	54	158	40	0	252	1565
05:30 PM	90	249	62	0	401	126	364	56	1	547	74	156	88	0	318	104	214	42	0	360	1626
05:45 PM	96	229	57	1	383	145	396	68	4	613	67	154	81	0	302	118	212	47	0	377	1675
Total	332	1052	240	2	1626	508	1589	239	7	2343	262	626	317	0	1205	346	755	167	1	1269	6443
06:00 PM	84	287	65	2	438	160	449	65	0	674	71	160	69	0	300	111	177	45	0	333	1745
06:15 PM	75	266	60	0	401	139	387	112	12	650	57	167	86	0	310	91	187	47	0	325	1686
06:30 PM	103	269	35	4	411	115	415	48	0	578	69	193	60	0	322	110	194	62	1	367	1678
06:45 PM	74	236	57	2	369	107	383	84	0	574	58	187	57	0	302	75	160	49	1	285	1530
Total	336	1058	217	8	1619	521	1634	309	12	2476	255	707	272	0	1234	387	718	203	2	1310	6639
Grand Total	2005	8821	1363	33	12222	2518	9303	1347	58	13226	1694	4166	1385	12	7257	2261	4627	1354	12	8254	40959
Apprch %	16.4	72.2	11.2	0.3		19	70.3	10.2	0.4		23.3	57.4	19.1	0.2		27.4	56.1	16.4	0.1		
Total %	4.9	21.5	3.3	0.1	29.8	6.1	22.7	3.3	0.1	32.3	4.1	10.2	3.4	0	17.7	5.5	11.3	3.3	0	20.2	

Miami Gardens Drive & NW 57th Avenue

File Name : Miami Gardens Drive & NW 57th Avenue
Site Code : 00000000
Start Date : 5/11/2016
Page No : 2

Groups Printed- Veh - Trucks - Turns

	NW 57th Avenue Southbound					NW 57th Avenue Northbound					Miami Gardens Drive Westbound					Miami Gardens Drive Eastbound					
	Left	Thru	RIght	Peds/Bike	App. Total	Left	Thru	RIght	Peds/Bike	App. Total	Left	Thru	RIght	Peds/Bike	App. Total	Left	Thru	RIght	Peds/Bike	App. Total	Int. Total
Veh	1919	8702	1347	24	11992	2488	9222	1333	48	13091	1502	4095	1374	10	6981	1943	4547	1336	9	7835	39899
% Veh	95.7	98.7	98.8	72.7	98.1	98.8	99.1	99	82.8	99	88.7	98.3	99.2	83.3	96.2	85.9	98.3	98.7	75	94.9	97.4
Trucks	42	119	16	9	186	21	81	14	10	126	10	71	11	2	94	26	80	18	3	127	533
% Trucks	2.1	1.3	1.2	27.3	1.5	0.8	0.9	1	17.2	1	0.6	1.7	0.8	16.7	1.3	1.1	1.7	1.3	25	1.5	1.3
U-Turns	44	0	0	0	44	9	0	0	0	9	182	0	0	0	182	292	0	0	0	292	527
% U-Turns	2.2	0	0	0	0.4	0.4	0	0	0	0.1	10.7	0	0	0	2.5	12.9	0	0	0	3.5	1.3

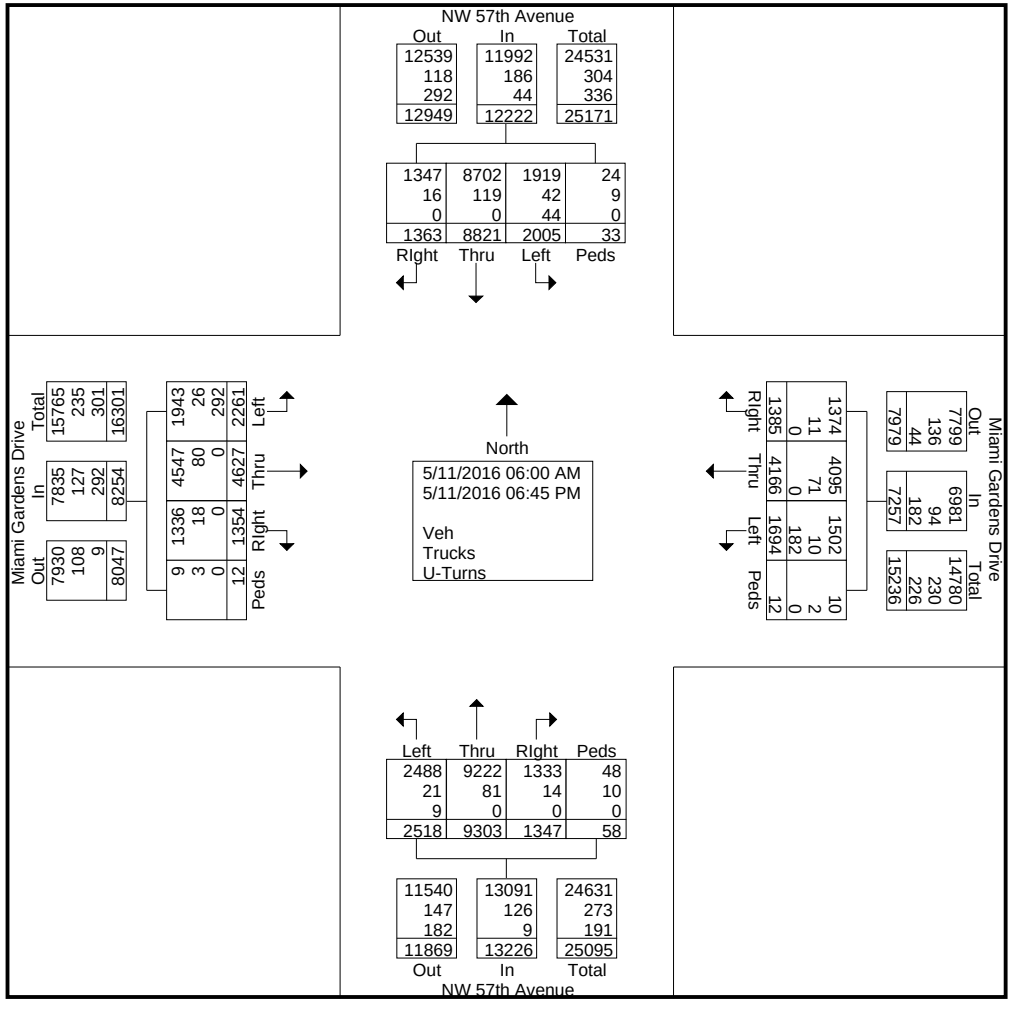

Miami Gardens Drive & NW 57th Avenue

File Name : Miami Gardens Drive & NW 57th Avenue
Site Code : 00000000
Start Date : 5/11/2016
Page No : 3

	NW 57th Avenue Southbound					NW 57th Avenue Northbound					Miami Gardens Drive Westbound					Miami Gardens Drive Eastbound					
Start Time	Left	Thru	RIght	Peds/Bike	App. Total	Left	Thru	RIght	Peds/Bike	App. Total	Left	Thru	RIght	Peds/Bike	App. Total	Left	Thru	RIght	Peds/Bike	App. Total	Int. Total
Peak Hour Analysis From 06:00 AM to 08:45 AM - Peak 1 of 1																					
Peak Hour for Entire Intersection Begins at 07:00 AM																					
07:00 AM	77	**447**	**59**	1	**584**	50	251	20	1	322	29	170	24	0	223	85	219	**58**	0	362	1491
07:15 AM	78	423	53	**2**	556	**73**	300	35	0	408	42	121	**51**	0	214	87	**244**	47	0	**378**	1556
07:30 AM	**121**	382	54	0	557	52	308	29	0	389	55	**206**	39	0	**300**	**103**	197	57	0	357	1603
07:45 AM	81	422	54	2	559	62	**397**	**37**	**5**	**501**	**67**	181	39	**3**	290	87	164	53	0	304	**1654**
Total Volume	357	1674	220	5	2256	237	1256	121	6	1620	193	678	153	3	1027	362	824	215	0	1401	6304
% App. Total	15.8	74.2	9.8	0.2		14.6	77.5	7.5	0.4		18.8	66	14.9	0.3		25.8	58.8	15.3	0		
PHF	.738	.936	.932	.625	.966	.812	.791	.818	.300	.808	.720	.823	.750	.250	.856	.879	.844	.927	.000	.927	.953

Miami Gardens Drive & NW 57th Avenue

File Name : Miami Gardens Drive & NW 57th Avenue
Site Code : 00000000
Start Date : 5/11/2016
Page No : 4

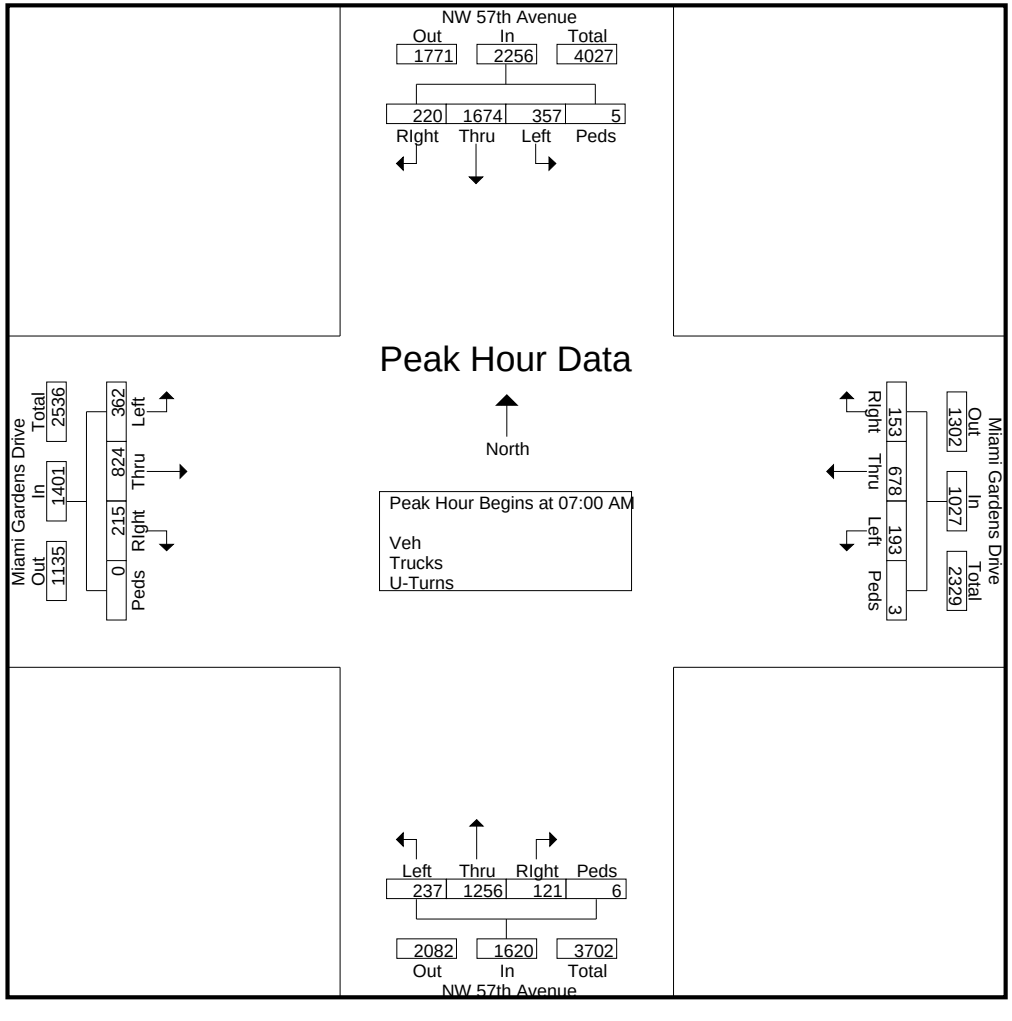

Miami Gardens Drive & NW 57th Avenue

File Name : Miami Gardens Drive & NW 57th Avenue
Site Code : 00000000
Start Date : 5/11/2016
Page No : 5

	NW 57th Avenue Southbound					NW 57th Avenue Northbound					Miami Gardens Drive Westbound					Miami Gardens Drive Eastbound					
Start Time	Left	Thru	RIght	Peds/Bike	App. Total	Left	Thru	RIght	Peds/Bike	App. Total	Left	Thru	RIght	Peds/Bike	App. Total	Left	Thru	RIght	Peds/Bike	App. Total	Int. Total
Peak Hour Analysis From 03:00 PM to 06:45 PM - Peak 1 of 1																					
Peak Hour for Entire Intersection Begins at 05:45 PM																					
05:45 PM	96	229	57	1	383	145	396	68	4	613	67	154	81	0	302	**118**	**212**	47	0	**377**	1675
06:00 PM	84	**287**	**65**	2	**438**	**160**	**449**	65	0	**674**	**71**	160	69	0	300	111	177	45	0	333	**1745**
06:15 PM	75	266	60	0	401	139	387	**112**	**12**	650	57	167	**86**	0	310	91	187	47	0	325	1686
06:30 PM	**103**	269	35	**4**	411	115	415	48	0	578	69	**193**	60	0	**322**	110	194	**62**	**1**	367	1678
Total Volume	358	1051	217	7	1633	559	1647	293	16	2515	264	674	296	0	1234	430	770	201	1	1402	6784
% App. Total	21.9	64.4	13.3	0.4		22.2	65.5	11.7	0.6		21.4	54.6	24	0		30.7	54.9	14.3	0.1		
PHF	.869	.916	.835	.438	.932	.873	.917	.654	.333	.933	.930	.873	.860	.000	.958	.911	.908	.810	.250	.930	.972

Miami Gardens Drive & NW 57th Avenue

File Name : Miami Gardens Drive & NW 57th Avenue
Site Code : 00000000
Start Date : 5/11/2016
Page No : 6

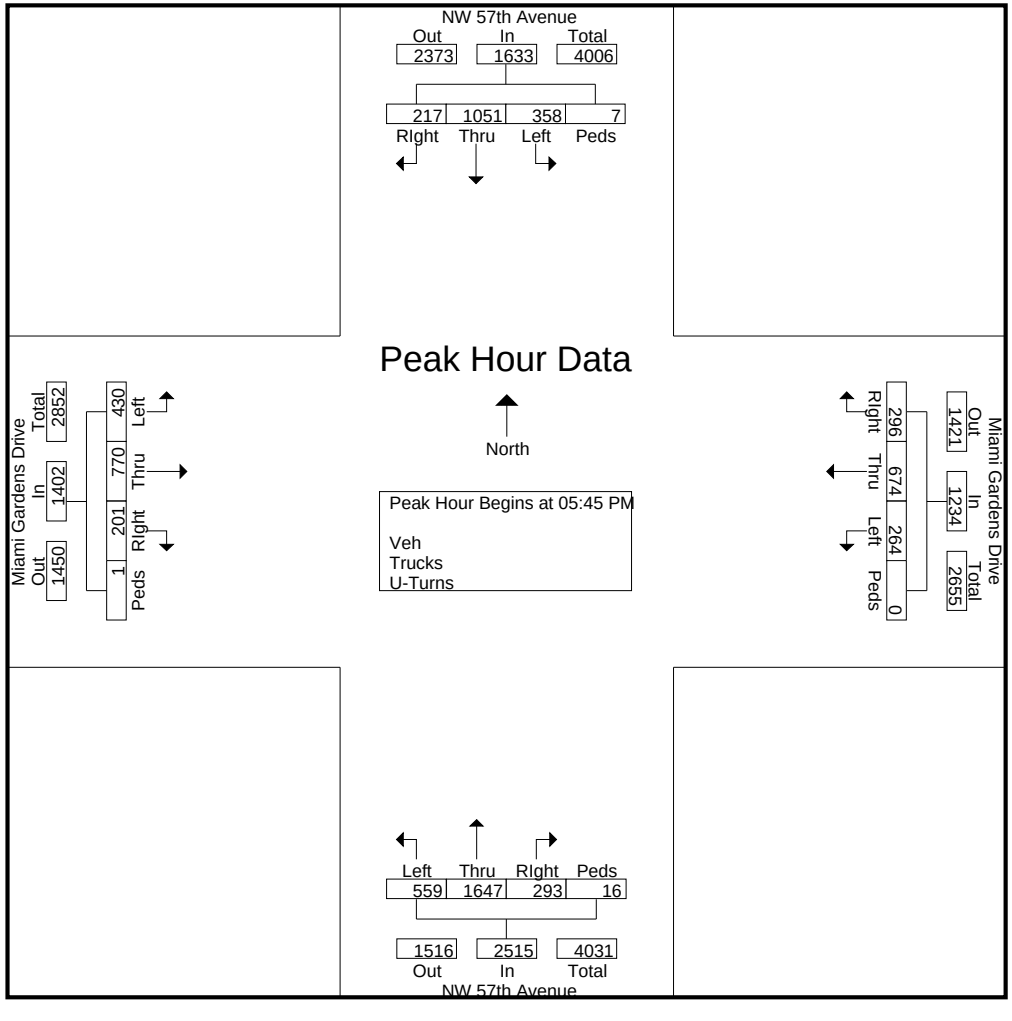

APPENDIX D

Level of Service Analysis

Movement	EBL	EBT	EBR	WBL	WBT	WBR	NBL	NBT	NBR	SBL	SBT	SBR
Lane Configurations												
Traffic Volume (veh/h)	288	470	420	193	1936	38	721	359	132	92	299	560
Future Volume (veh/h)	288	470	420	193	1936	38	721	359	132	92	299	560
Number	1	6	16	5	2	12	7	4	14	3	8	18
Initial Q (Qb), veh	0	0	0	0	0	0	0	0	0	0	0	0
Ped-Bike Adj(A_pbT)	1.00		1.00	1.00		1.00	1.00		1.00	1.00		1.00
Parking Bus, Adj	1.00	1.00	1.00	1.00	1.00	1.00	1.00	1.00	1.00	1.00	1.00	1.00
Adj Sat Flow, veh/h/ln	1863	1863	1863	1863	1863	1900	1863	1863	1900	1863	1863	1900
Adj Flow Rate, veh/h	313	511	457	203	2038	40	775	386	142	100	325	609
Adj No. of Lanes	2	2	1	1	3	0	1	2	0	1	2	0
Peak Hour Factor	0.92	0.92	0.92	0.95	0.95	0.95	0.93	0.93	0.93	0.92	0.92	0.92
Percent Heavy Veh, %	2	2	2	2	2	2	2	2	2	2	2	2
Cap, veh/h	249	1298	924	338	1940	38	424	888	323	305	334	299
Arrive On Green	0.07	0.37	0.37	0.08	0.38	0.38	0.22	0.35	0.35	0.06	0.19	0.19
Sat Flow, veh/h	3442	3539	1583	1774	5135	101	1774	2545	924	1774	1770	1583
Grp Volume(v), veh/h	313	511	457	203	1345	733	775	267	261	100	325	609
Grp Sat Flow(s),veh/h/ln	1721	1770	1583	1774	1695	1845	1774	1770	1700	1774	1770	1583
Q Serve(g_s), s	13.0	19.2	30.4	12.8	68.0	68.0	39.0	20.8	21.3	8.1	32.8	34.0
Cycle Q Clear(g_c), s	13.0	19.2	30.4	12.8	68.0	68.0	39.0	20.8	21.3	8.1	32.8	34.0
Prop In Lane	1.00		1.00	1.00		0.05	1.00		0.54	1.00		1.00
Lane Grp Cap(c), veh/h	249	1298	924	338	1281	697	424	618	593	305	334	299
V/C Ratio(X)	1.26	0.39	0.49	0.60	1.05	1.05	1.83	0.43	0.44	0.33	0.97	2.04
Avail Cap(c_a), veh/h	249	1298	924	417	1281	697	424	618	593	372	334	299
HCM Platoon Ratio	1.00	1.00	1.00	1.00	1.00	1.00	1.00	1.00	1.00	1.00	1.00	1.00
Upstream Filter(I)	1.00	1.00	1.00	1.00	1.00	1.00	1.00	1.00	1.00	1.00	1.00	1.00
Uniform Delay (d), s/veh	83.5	42.2	21.9	32.3	56.0	56.0	58.8	44.9	45.1	54.3	72.5	73.0
Incr Delay (d2), s/veh	145.0	0.1	0.2	0.6	39.4	48.5	380.9	2.2	2.4	0.2	42.7	477.9
Initial Q Delay(d3),s/veh	0.0	0.0	0.0	0.0	0.0	0.0	0.0	0.0	0.0	0.0	0.0	0.0
%ile BackOfQ(50%),veh/ln	11.2	9.5	13.4	6.3	38.8	44.1	66.0	10.5	10.4	4.0	20.0	54.6
LnGrp Delay(d),s/veh	228.5	42.2	22.1	33.0	95.4	104.5	439.7	47.1	47.4	54.5	115.2	550.9
LnGrp LOS	F	D	C	C	F	F	F	D	D	D	F	F
Approach Vol, veh/h		1281			2281			1303			1034	
Approach Delay, s/veh		80.6			92.8			280.7			365.9	
Approach LOS		F			F			F			F	

Timer	1	2	3	4	5	6	7	8
Assigned Phs	1	2	3	4	5	6	7	8
Phs Duration (G+Y+Rc), s	19.0	74.0	17.2	69.8	21.0	72.0	46.0	41.0
Change Period (Y+Rc), s	6.0	6.0	7.0	7.0	6.0	6.0	7.0	7.0
Max Green Setting (Gmax), s	13.0	68.0	17.0	56.0	23.0	58.0	39.0	34.0
Max Q Clear Time (g_c+I1), s	15.0	70.0	10.1	23.3	14.8	32.4	41.0	36.0
Green Ext Time (p_c), s	0.0	0.0	0.1	10.4	0.2	8.4	0.0	0.0

Intersection Summary	
HCM 2010 Ctrl Delay	179.5
HCM 2010 LOS	F

Movement	EBL	EBT	EBR	WBL	WBT	WBR	NBL	NBT	NBR	SBL	SBT	SBR
Lane Configurations												
Traffic Volume (veh/h)	109	543	115	256	1482	139	294	79	101	130	198	182
Future Volume (veh/h)	109	543	115	256	1482	139	294	79	101	130	198	182
Number	1	6	16	5	2	12	7	4	14	3	8	18
Initial Q (Qb), veh	0	0	0	0	0	0	0	0	0	0	0	0
Ped-Bike Adj(A_pbT)	1.00		1.00	1.00		1.00	1.00		1.00	1.00		1.00
Parking Bus, Adj	1.00	1.00	1.00	1.00	1.00	1.00	1.00	1.00	1.00	1.00	1.00	1.00
Adj Sat Flow, veh/h/ln	1863	1863	1900	1863	1863	1900	1863	1863	1863	1863	1863	1863
Adj Flow Rate, veh/h	122	610	129	284	1647	154	368	99	126	157	239	219
Adj No. of Lanes	1	2	0	1	2	0	1	1	1	1	1	1
Peak Hour Factor	0.89	0.89	0.89	0.90	0.90	0.90	0.80	0.80	0.80	0.83	0.83	0.83
Percent Heavy Veh, %	2	2	2	2	2	2	2	2	2	2	2	2
Cap, veh/h	144	1428	301	409	1628	151	407	474	403	385	293	249
Arrive On Green	0.05	0.49	0.49	0.06	0.50	0.50	0.19	0.25	0.25	0.09	0.16	0.16
Sat Flow, veh/h	1774	2910	614	1774	3276	303	1774	1863	1583	1774	1863	1583
Grp Volume(v), veh/h	122	370	369	284	881	920	368	99	126	157	239	219
Grp Sat Flow(s),veh/h/ln	1774	1770	1754	1774	1770	1809	1774	1863	1583	1774	1863	1583
Q Serve(g_s), s	6.1	20.2	20.3	9.0	74.6	74.6	25.3	6.3	9.7	11.0	18.6	20.3
Cycle Q Clear(g_c), s	6.1	20.2	20.3	9.0	74.6	74.6	25.3	6.3	9.7	11.0	18.6	20.3
Prop In Lane	1.00		0.35	1.00		0.17	1.00		1.00	1.00		1.00
Lane Grp Cap(c), veh/h	144	869	861	409	880	899	407	474	403	385	293	249
V/C Ratio(X)	0.85	0.43	0.43	0.69	1.00	1.02	0.90	0.21	0.31	0.41	0.82	0.88
Avail Cap(c_a), veh/h	154	869	861	409	880	899	587	474	403	737	397	338
HCM Platoon Ratio	1.00	1.00	1.00	1.00	1.00	1.00	1.00	1.00	1.00	1.00	1.00	1.00
Upstream Filter(I)	1.00	1.00	1.00	0.09	0.09	0.09	1.00	1.00	1.00	1.00	1.00	1.00
Uniform Delay (d), s/veh	42.0	24.6	24.6	25.4	37.7	37.7	41.2	44.0	45.3	46.9	61.1	61.8
Incr Delay (d2), s/veh	30.1	1.5	1.6	0.4	9.5	15.6	10.4	0.2	0.3	0.3	8.2	16.6
Initial Q Delay(d3),s/veh	0.0	0.0	0.0	0.0	0.0	0.0	0.0	0.0	0.0	0.0	0.0	0.0
%ile BackOfQ(50%),veh/ln	6.2	10.2	10.2	5.3	38.7	41.1	13.5	3.3	4.3	5.4	10.2	10.1
LnGrp Delay(d),s/veh	72.0	26.1	26.2	25.8	47.2	53.4	51.7	44.2	45.6	47.2	69.4	78.5
LnGrp LOS	E	C	C	C	F	F	D	D	D	D	E	E
Approach Vol, veh/h		861			2085			593			615	
Approach Delay, s/veh		32.6			47.0			49.1			66.9	
Approach LOS		C			D			D			E	

Timer	1	2	3	4	5	6	7	8
Assigned Phs	1	2	3	4	5	6	7	8
Phs Duration (G+Y+Rc), s	11.1	79.6	16.2	43.2	12.0	78.6	30.8	28.6
Change Period (Y+Rc), s	3.0	5.0	3.0	5.0	3.0	5.0	3.0	5.0
Max Green Setting (Gmax), s	9.0	50.0	43.0	32.0	9.0	50.0	43.0	32.0
Max Q Clear Time (g_c+I1), s	8.1	76.6	13.0	11.7	11.0	22.3	27.3	22.3
Green Ext Time (p_c), s	0.0	0.0	0.2	2.4	0.0	7.0	0.5	1.3

Intersection Summary		
HCM 2010 Ctrl Delay		47.3
HCM 2010 LOS		D

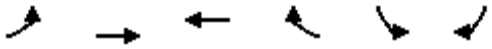

Movement	EBL	EBT	WBT	WBR	SBL	SBR
Lane Configurations						
Traffic Volume (veh/h)	105	669	1644	363	357	233
Future Volume (veh/h)	105	669	1644	363	357	233
Number	1	6	2	12	3	18
Initial Q (Qb), veh	0	0	0	0	0	0
Ped-Bike Adj(A_pbT)	1.00			1.00	1.00	1.00
Parking Bus, Adj	1.00	1.00	1.00	1.00	1.00	1.00
Adj Sat Flow, veh/h/ln	1863	1863	1863	1900	1863	1863
Adj Flow Rate, veh/h	121	769	1847	408	372	243
Adj No. of Lanes	1	2	2	0	1	1
Peak Hour Factor	0.87	0.87	0.89	0.89	0.96	0.96
Percent Heavy Veh, %	2	2	2	2	2	2
Cap, veh/h	141	2499	1844	393	403	441
Arrive On Green	0.07	0.94	1.00	1.00	0.23	0.23
Sat Flow, veh/h	1774	3632	2998	619	1774	1583
Grp Volume(v), veh/h	121	769	1099	1156	372	243
Grp Sat Flow(s),veh/h/ln	1774	1770	1770	1754	1774	1583
Q Serve(g_s), s	5.8	2.8	0.0	95.2	30.8	19.6
Cycle Q Clear(g_c), s	5.8	2.8	0.0	95.2	30.8	19.6
Prop In Lane	1.00			0.35	1.00	1.00
Lane Grp Cap(c), veh/h	141	2499	1123	1113	403	441
V/C Ratio(X)	0.86	0.31	0.98	1.04	0.92	0.55
Avail Cap(c_a), veh/h	204	2499	1123	1113	556	577
HCM Platoon Ratio	1.33	1.33	2.00	2.00	1.00	1.00
Upstream Filter(I)	0.83	0.83	1.00	1.00	1.00	1.00
Uniform Delay (d), s/veh	49.2	1.4	0.0	0.0	56.7	46.1
Incr Delay (d2), s/veh	16.2	0.3	22.1	37.6	16.2	0.8
Initial Q Delay(d3),s/veh	0.0	0.0	0.0	0.0	0.0	0.0
%ile BackOfQ(50%),veh/ln	5.6	1.3	6.9	11.6	16.9	8.7
LnGrp Delay(d),s/veh	65.3	1.7	22.1	37.6	72.8	46.9
LnGrp LOS	E	A	C	F	E	D
Approach Vol, veh/h		890	2255		615	
Approach Delay, s/veh		10.3	30.0		62.6	
Approach LOS		B	C		E	

Timer	1	2	3	4	5	6	7	8
Assigned Phs	1	2				6		8
Phs Duration (G+Y+Rc), s	10.8	100.1				110.9		39.1
Change Period (Y+Rc), s	3.0	5.0				5.0		5.0
Max Green Setting (Gmax), s	13.0	77.0				93.0		47.0
Max Q Clear Time (g_c+I1), s	7.8	97.2				4.8		32.8
Green Ext Time (p_c), s	0.1	0.0				13.4		1.3

Intersection Summary	
HCM 2010 Ctrl Delay	30.7
HCM 2010 LOS	C

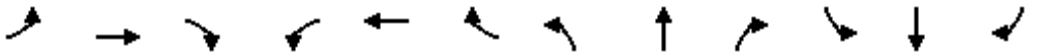

Movement	EBL	EBT	EBR	WBL	WBT	WBR	NBL	NBT	NBR	SBL	SBT	SBR
Lane Configurations												
Traffic Volume (vph)	37	918	45	11	1712	24	115	5	23	49	26	36
Future Volume (vph)	37	918	45	11	1712	24	115	5	23	49	26	36
Ideal Flow (vphpl)	1900	1900	1900	1900	1900	1900	1900	1900	1900	1900	1900	1900
Total Lost time (s)	5.0	5.0		5.0	5.0			6.0	6.0		6.0	6.0
Lane Util. Factor	1.00	0.95		1.00	0.95			1.00	1.00		1.00	1.00
Frt	1.00	0.99		1.00	1.00			1.00	0.85		1.00	0.85
Flt Protected	0.95	1.00		0.95	1.00			0.95	1.00		0.97	1.00
Satd. Flow (prot)	1770	3514		1770	3532			1777	1583		1804	1583
Flt Permitted	0.07	1.00		0.22	1.00			0.95	1.00		0.97	1.00
Satd. Flow (perm)	132	3514		414	3532			1777	1583		1804	1583
Peak-hour factor, PHF	0.88	0.88	0.88	0.95	0.95	0.95	0.77	0.77	0.77	0.55	0.55	0.55
Adj. Flow (vph)	42	1043	51	12	1802	25	149	6	30	89	47	65
RTOR Reduction (vph)	0	2	0	0	1	0	0	0	28	0	0	52
Lane Group Flow (vph)	42	1092	0	12	1826	0	0	155	2	0	136	13
Turn Type	Perm	NA		Perm	NA		Split	NA	Perm	Split	NA	Perm
Protected Phases		6			2		4	4		3	3	
Permitted Phases	6			2					4			3
Actuated Green, G (s)	106.0	106.0		106.0	106.0			12.2	12.2		14.8	14.8
Effective Green, g (s)	106.0	106.0		106.0	106.0			12.2	12.2		14.8	14.8
Actuated g/C Ratio	0.71	0.71		0.71	0.71			0.08	0.08		0.10	0.10
Clearance Time (s)	5.0	5.0		5.0	5.0			6.0	6.0		6.0	6.0
Vehicle Extension (s)	1.0	1.0		1.0	1.0			2.5	2.5		2.5	2.5
Lane Grp Cap (vph)	93	2483		292	2495			144	128		177	156
v/s Ratio Prot		0.31			c0.52			c0.09			c0.08	
v/s Ratio Perm	0.32			0.03					0.00			0.01
v/c Ratio	0.45	0.44		0.04	0.73			1.08	0.02		0.77	0.08
Uniform Delay, d1	9.5	9.4		6.6	13.4			68.9	63.4		65.9	61.4
Progression Factor	1.33	1.18		0.42	0.61			1.00	1.00		1.00	1.00
Incremental Delay, d2	14.0	0.5		0.2	1.7			96.9	0.0		17.3	0.2
Delay (s)	26.6	11.6		3.0	9.8			165.8	63.4		83.2	61.6
Level of Service	C	B		A	A			F	E		F	E
Approach Delay (s)		12.1			9.8			149.2			76.2	
Approach LOS		B			A			F			E	

Intersection Summary			
HCM 2000 Control Delay	22.2	HCM 2000 Level of Service	C
HCM 2000 Volume to Capacity ratio	0.77		
Actuated Cycle Length (s)	150.0	Sum of lost time (s)	17.0
Intersection Capacity Utilization	74.7%	ICU Level of Service	D
Analysis Period (min)	15		

c Critical Lane Group

Movement	EBT	EBR	WBL	WBT	NBL	NBR
Lane Configurations						
Traffic Volume (veh/h)	825	165	363	1509	178	176
Future Volume (veh/h)	825	165	363	1509	178	176
Number	6	16	5	2	7	14
Initial Q (Qb), veh	0	0	0	0	0	0
Ped-Bike Adj(A_pbT)		1.00	1.00		1.00	1.00
Parking Bus, Adj	1.00	1.00	1.00	1.00	1.00	1.00
Adj Sat Flow, veh/h/ln	1863	1900	1863	1863	1863	1863
Adj Flow Rate, veh/h	971	194	374	1556	202	200
Adj No. of Lanes	2	0	1	2	1	1
Peak Hour Factor	0.85	0.85	0.97	0.97	0.88	0.88
Percent Heavy Veh, %	2	2	2	2	2	2
Cap, veh/h	2095	418	428	2803	251	224
Arrive On Green	0.71	0.71	0.12	1.00	0.14	0.14
Sat Flow, veh/h	3035	587	1774	3632	1774	1583
Grp Volume(v), veh/h	584	581	374	1556	202	200
Grp Sat Flow(s),veh/h/ln	1770	1759	1774	1770	1774	1583
Q Serve(g_s), s	21.3	21.3	9.0	0.0	16.6	18.6
Cycle Q Clear(g_c), s	21.3	21.3	9.0	0.0	16.6	18.6
Prop In Lane		0.33	1.00		1.00	1.00
Lane Grp Cap(c), veh/h	1260	1253	428	2803	251	224
V/C Ratio(X)	0.46	0.46	0.87	0.56	0.81	0.89
Avail Cap(c_a), veh/h	1260	1253	428	2803	319	285
HCM Platoon Ratio	1.00	1.00	2.00	2.00	1.00	1.00
Upstream Filter(I)	0.90	0.90	0.26	0.26	1.00	1.00
Uniform Delay (d), s/veh	9.3	9.3	14.0	0.0	62.4	63.3
Incr Delay (d2), s/veh	1.1	1.1	5.2	0.2	10.2	22.9
Initial Q Delay(d3),s/veh	0.0	0.0	0.0	0.0	0.0	0.0
%ile BackOfQ(50%),veh/ln	10.6	10.7	10.8	0.1	8.8	16.9
LnGrp Delay(d),s/veh	10.4	10.4	19.2	0.2	72.6	86.2
LnGrp LOS	B	B	B	A	E	F
Approach Vol, veh/h	1165			1930	402	
Approach Delay, s/veh	10.4			3.9	79.4	
Approach LOS	B			A	E	

Timer	1	2	3	4	5	6	7	8
Assigned Phs		2		4	5	6		
Phs Duration (G+Y+Rc), s		123.8		26.2	12.0	111.8		
Change Period (Y+Rc), s		5.0		5.0	3.0	5.0		
Max Green Setting (Gmax), s		113.0		27.0	9.0	101.0		
Max Q Clear Time (g_c+I1), s		2.0		20.6	11.0	23.3		
Green Ext Time (p_c), s		9.6		0.6	0.0	9.6		

Intersection Summary	
HCM 2010 Ctrl Delay	14.7
HCM 2010 LOS	B

Movement	EBL	EBT	EBR	WBL	WBT	WBR	NBL	NBT	NBR	SBL	SBT	SBR
Lane Configurations												
Traffic Volume (veh/h)	31	874	96	36	1464	11	341	8	136	17	8	67
Future Volume (veh/h)	31	874	96	36	1464	11	341	8	136	17	8	67
Number	1	6	16	5	2	12	7	4	14	3	8	18
Initial Q (Qb), veh	0	0	0	0	0	0	0	0	0	0	0	0
Ped-Bike Adj(A_pbT)	1.00		1.00	1.00		1.00	1.00		1.00	1.00		1.00
Parking Bus, Adj	1.00	1.00	1.00	1.00	1.00	1.00	1.00	1.00	1.00	1.00	1.00	1.00
Adj Sat Flow, veh/h/ln	1863	1863	1900	1863	1863	1900	1863	1863	1900	1900	1863	1900
Adj Flow Rate, veh/h	39	1092	120	37	1509	11	426	10	170	24	11	93
Adj No. of Lanes	1	2	0	1	2	0	1	1	0	0	1	0
Peak Hour Factor	0.80	0.80	0.80	0.97	0.97	0.97	0.80	0.80	0.80	0.72	0.72	0.72
Percent Heavy Veh, %	2	2	2	2	2	2	2	2	2	2	2	2
Cap, veh/h	216	2168	238	404	2425	18	217	18	302	56	38	174
Arrive On Green	0.05	1.00	1.00	0.02	0.45	0.45	0.20	0.20	0.20	0.20	0.20	0.20
Sat Flow, veh/h	1774	3217	353	1774	3601	26	1285	89	1508	139	189	871
Grp Volume(v), veh/h	39	600	612	37	741	779	426	0	180	128	0	0
Grp Sat Flow(s),veh/h/ln	1774	1770	1800	1774	1770	1858	1285	0	1597	1199	0	0
Q Serve(g_s), s	1.0	0.0	0.0	1.0	47.9	48.0	12.1	0.0	15.2	2.6	0.0	0.0
Cycle Q Clear(g_c), s	1.0	0.0	0.0	1.0	47.9	48.0	30.0	0.0	15.2	17.9	0.0	0.0
Prop In Lane	1.00		0.20	1.00		0.01	1.00		0.94	0.19		0.73
Lane Grp Cap(c), veh/h	216	1192	1213	404	1191	1251	217	0	319	268	0	0
V/C Ratio(X)	0.18	0.50	0.50	0.09	0.62	0.62	1.97	0.00	0.56	0.48	0.00	0.00
Avail Cap(c_a), veh/h	263	1192	1213	452	1191	1251	217	0	319	268	0	0
HCM Platoon Ratio	2.00	2.00	2.00	0.67	0.67	0.67	1.00	1.00	1.00	1.00	1.00	1.00
Upstream Filter(I)	0.86	0.86	0.86	1.00	1.00	1.00	1.00	0.00	1.00	1.00	0.00	0.00
Uniform Delay (d), s/veh	15.1	0.0	0.0	7.0	26.6	26.6	65.8	0.0	54.1	53.3	0.0	0.0
Incr Delay (d2), s/veh	0.1	1.3	1.3	0.0	2.5	2.3	451.5	0.0	1.9	1.0	0.0	0.0
Initial Q Delay(d3),s/veh	0.0	0.0	0.0	0.0	0.0	0.0	0.0	0.0	0.0	0.0	0.0	0.0
%ile BackOfQ(50%),veh/ln	0.6	0.4	0.4	0.5	24.3	25.5	36.1	0.0	6.9	4.9	0.0	0.0
LnGrp Delay(d),s/veh	15.2	1.3	1.3	7.0	29.1	29.0	517.3	0.0	56.0	54.3	0.0	0.0
LnGrp LOS	B	A	A	A	C	C	F		E	D		
Approach Vol, veh/h		1251			1557			606			128	
Approach Delay, s/veh		1.7			28.5			380.3			54.3	
Approach LOS		A			C			F			D	

Timer	1	2	3	4	5	6	7	8
Assigned Phs	1	2		4	5	6		8
Phs Duration (G+Y+Rc), s	7.0	107.0		36.0	6.9	107.1		36.0
Change Period (Y+Rc), s	3.0	6.0		6.0	3.0	6.0		6.0
Max Green Setting (Gmax), s	8.0	97.0		30.0	8.0	97.0		30.0
Max Q Clear Time (g_c+I1), s	3.0	50.0		32.0	3.0	2.0		19.9
Green Ext Time (p_c), s	0.0	7.7		0.0	0.0	7.7		2.2

Intersection Summary		
HCM 2010 Ctrl Delay		80.2
HCM 2010 LOS		F

Movement	EBL	EBT	EBR	WBL	WBT	WBR	NBL	NBT	NBR	SBL	SBT	SBR
Lane Configurations												
Traffic Volume (veh/h)	3	925	99	169	1261	11	249	4	361	5	1	1
Future Volume (veh/h)	3	925	99	169	1261	11	249	4	361	5	1	1
Number	1	6	16	5	2	12	7	4	14	3	8	18
Initial Q (Qb), veh	0	0	0	0	0	0	0	0	0	0	0	0
Ped-Bike Adj(A_pbT)	1.00		1.00	1.00		1.00	1.00		1.00	1.00		1.00
Parking Bus, Adj	1.00	1.00	1.00	1.00	1.00	1.00	1.00	1.00	1.00	1.00	1.00	1.00
Adj Sat Flow, veh/h/ln	1863	1863	1900	1863	1863	1900	1863	1863	1863	1900	1863	1900
Adj Flow Rate, veh/h	3	1028	110	171	1274	11	277	4	401	9	2	2
Adj No. of Lanes	1	2	0	1	2	0	1	1	1	0	1	0
Peak Hour Factor	0.90	0.90	0.90	0.99	0.99	0.99	0.90	0.90	0.90	0.55	0.55	0.55
Percent Heavy Veh, %	2	2	2	2	2	2	2	2	2	2	2	2
Cap, veh/h	291	1828	196	357	2373	20	434	509	433	249	55	48
Arrive On Green	0.57	0.57	0.57	0.15	1.00	1.00	0.27	0.27	0.27	0.27	0.27	0.27
Sat Flow, veh/h	428	3226	345	1774	3596	31	1407	1863	1583	762	203	175
Grp Volume(v), veh/h	3	564	574	171	627	658	277	4	401	13	0	0
Grp Sat Flow(s),veh/h/ln	428	1770	1802	1774	1770	1857	1407	1863	1583	1140	0	0
Q Serve(g_s), s	0.5	30.4	30.4	5.7	0.0	0.0	25.7	0.2	37.0	0.0	0.0	0.0
Cycle Q Clear(g_c), s	0.5	30.4	30.4	5.7	0.0	0.0	26.5	0.2	37.0	0.8	0.0	0.0
Prop In Lane	1.00		0.19	1.00		0.02	1.00		1.00	0.69		0.15
Lane Grp Cap(c), veh/h	291	1003	1021	357	1168	1226	434	509	433	352	0	0
V/C Ratio(X)	0.01	0.56	0.56	0.48	0.54	0.54	0.64	0.01	0.93	0.04	0.00	0.00
Avail Cap(c_a), veh/h	291	1003	1021	357	1168	1226	434	509	433	352	0	0
HCM Platoon Ratio	1.00	1.00	1.00	2.00	2.00	2.00	1.00	1.00	1.00	1.00	1.00	1.00
Upstream Filter(I)	1.00	1.00	1.00	1.00	1.00	1.00	1.00	1.00	1.00	1.00	0.00	0.00
Uniform Delay (d), s/veh	14.2	20.7	20.7	14.0	0.0	0.0	49.1	39.7	53.0	39.9	0.0	0.0
Incr Delay (d2), s/veh	0.1	2.3	2.2	4.5	1.8	1.7	7.0	0.0	28.3	0.2	0.0	0.0
Initial Q Delay(d3),s/veh	0.0	0.0	0.0	0.0	0.0	0.0	0.0	0.0	0.0	0.0	0.0	0.0
%ile BackOfQ(50%),veh/ln	0.1	15.4	15.6	3.2	0.6	0.6	11.2	0.1	19.6	0.4	0.0	0.0
LnGrp Delay(d),s/veh	14.2	22.9	22.9	18.5	1.8	1.7	56.1	39.7	81.3	40.1	0.0	0.0
LnGrp LOS	B	C	C	B	A	A	E	D	F	D		
Approach Vol, veh/h		1141			1456			682			13	
Approach Delay, s/veh		22.9			3.7			70.8			40.1	
Approach LOS		C			A			E			D	

Timer	1	2	3	4	5	6	7	8
Assigned Phs		2		4	5	6		8
Phs Duration (G+Y+Rc), s		104.0		46.0	14.0	90.0		46.0
Change Period (Y+Rc), s		5.0		5.0	3.0	5.0		5.0
Max Green Setting (Gmax), s		99.0		41.0	11.0	85.0		41.0
Max Q Clear Time (g_c+I1), s		2.0		39.0	7.7	32.4		2.8
Green Ext Time (p_c), s		6.2		0.6	0.1	6.1		2.5

Intersection Summary		
HCM 2010 Ctrl Delay		24.4
HCM 2010 LOS		C

Movement	EBL	EBT	EBR	WBL	WBT	WBR	NBL	NBT	NBR	SBL	SBT	SBR
Lane Configurations												
Traffic Volume (veh/h)	11	1280	0	20	1383	65	5	1	115	191	1	53
Future Volume (veh/h)	11	1280	0	20	1383	65	5	1	115	191	1	53
Number	1	6	16	5	2	12	7	4	14	3	8	18
Initial Q (Qb), veh	0	0	0	0	0	0	0	0	0	0	0	0
Ped-Bike Adj(A_pbT)	1.00		1.00	1.00		1.00	1.00		1.00	1.00		1.00
Parking Bus, Adj	1.00	1.00	1.00	1.00	1.00	1.00	1.00	1.00	1.00	1.00	1.00	1.00
Adj Sat Flow, veh/h/ln	1863	1863	1900	1863	1863	1900	1900	1863	1900	1863	1863	1900
Adj Flow Rate, veh/h	12	1407	0	21	1456	68	6	1	137	210	1	58
Adj No. of Lanes	1	2	0	1	2	0	0	1	0	1	1	0
Peak Hour Factor	0.91	0.91	0.91	0.95	0.95	0.95	0.84	0.84	0.84	0.91	0.91	0.91
Percent Heavy Veh, %	2	2	2	2	2	2	2	2	2	2	2	2
Cap, veh/h	270	1911	0	408	1860	87	32	15	433	364	8	447
Arrive On Green	0.17	1.00	0.00	0.09	0.54	0.54	0.29	0.29	0.29	0.29	0.29	0.29
Sat Flow, veh/h	1774	3632	0	1774	3444	160	24	54	1510	1246	27	1560
Grp Volume(v), veh/h	12	1407	0	21	746	778	144	0	0	210	0	59
Grp Sat Flow(s),veh/h/ln	1774	1770	0	1774	1770	1834	1587	0	0	1246	0	1587
Q Serve(g_s), s	0.3	0.0	0.0	0.7	50.3	50.8	0.0	0.0	0.0	17.1	0.0	4.1
Cycle Q Clear(g_c), s	0.3	0.0	0.0	0.7	50.3	50.8	10.6	0.0	0.0	27.7	0.0	4.1
Prop In Lane	1.00		0.00	1.00		0.09	0.04		0.95	1.00		0.98
Lane Grp Cap(c), veh/h	270	1911	0	408	956	991	480	0	0	364	0	455
V/C Ratio(X)	0.04	0.74	0.00	0.05	0.78	0.78	0.30	0.00	0.00	0.58	0.00	0.13
Avail Cap(c_a), veh/h	270	1911	0	408	956	991	480	0	0	364	0	455
HCM Platoon Ratio	2.00	2.00	2.00	1.00	1.00	1.00	1.00	1.00	1.00	1.00	1.00	1.00
Upstream Filter(I)	1.00	1.00	0.00	1.00	1.00	1.00	1.00	0.00	0.00	1.00	0.00	1.00
Uniform Delay (d), s/veh	17.6	0.0	0.0	10.6	27.4	27.5	42.0	0.0	0.0	49.7	0.0	39.6
Incr Delay (d2), s/veh	0.3	2.6	0.0	0.2	6.3	6.2	1.6	0.0	0.0	6.5	0.0	0.6
Initial Q Delay(d3),s/veh	0.0	0.0	0.0	0.0	0.0	0.0	0.0	0.0	0.0	0.0	0.0	0.0
%ile BackOfQ(50%),veh/ln	0.2	0.7	0.0	0.3	26.1	27.4	4.9	0.0	0.0	8.5	0.0	1.9
LnGrp Delay(d),s/veh	17.9	2.6	0.0	10.8	33.8	33.8	43.6	0.0	0.0	56.3	0.0	40.2
LnGrp LOS	B	A		B	C	C	D			E		D
Approach Vol, veh/h		1419			1545			144			269	
Approach Delay, s/veh		2.7			33.5			43.6			52.8	
Approach LOS		A			C			D			D	

Timer	1	2	3	4	5	6	7	8
Assigned Phs	1	2		4	5	6		8
Phs Duration (G+Y+Rc), s	16.0	86.0		48.0	16.0	86.0		48.0
Change Period (Y+Rc), s	3.0	5.0		5.0	3.0	5.0		5.0
Max Green Setting (Gmax), s	13.0	81.0		43.0	13.0	81.0		43.0
Max Q Clear Time (g_c+I1), s	2.3	52.8		12.6	2.7	2.0		29.7
Green Ext Time (p_c), s	0.0	9.6		1.6	0.0	10.6		1.3

Intersection Summary		
HCM 2010 Ctrl Delay		22.5
HCM 2010 LOS		C

Movement	EBL	EBT	EBR	WBL	WBT	WBR	NBL	NBT	NBR	SBL	SBT	SBR
Lane Configurations												
Traffic Volume (veh/h)	241	1201	144	217	966	91	229	822	292	231	830	273
Future Volume (veh/h)	241	1201	144	217	966	91	229	822	292	231	830	273
Number	3	8	18	7	4	14	1	6	16	5	2	12
Initial Q (Qb), veh	0	0	0	0	0	0	0	0	0	0	0	0
Ped-Bike Adj(A_pbT)	1.00		1.00	1.00		1.00	1.00		1.00	1.00		1.00
Parking Bus, Adj	1.00	1.00	1.00	1.00	1.00	1.00	1.00	1.00	1.00	1.00	1.00	1.00
Adj Sat Flow, veh/h/ln	1863	1863	1900	1863	1863	1900	1863	1863	1900	1863	1863	1900
Adj Flow Rate, veh/h	271	1349	162	231	1028	97	249	893	317	254	912	300
Adj No. of Lanes	2	3	0	2	3	0	2	3	0	2	3	0
Peak Hour Factor	0.89	0.89	0.89	0.94	0.94	0.94	0.92	0.92	0.92	0.91	0.91	0.91
Percent Heavy Veh, %	2	2	2	2	2	2	2	2	2	2	2	2
Cap, veh/h	318	1169	140	277	1145	108	285	1747	618	287	1788	586
Arrive On Green	0.09	0.25	0.25	0.08	0.24	0.24	0.08	0.47	0.47	0.08	0.47	0.47
Sat Flow, veh/h	3442	4603	553	3442	4729	445	3442	3709	1312	3442	3790	1243
Grp Volume(v), veh/h	271	994	517	231	737	388	249	816	394	254	815	397
Grp Sat Flow(s),veh/h/ln	1721	1695	1765	1721	1695	1784	1721	1695	1631	1721	1695	1643
Q Serve(g_s), s	14.0	45.7	45.7	11.9	37.9	38.0	12.9	30.2	30.3	13.1	30.1	30.3
Cycle Q Clear(g_c), s	14.0	45.7	45.7	11.9	37.9	38.0	12.9	30.2	30.3	13.1	30.1	30.3
Prop In Lane	1.00		0.31	1.00		0.25	1.00		0.80	1.00		0.76
Lane Grp Cap(c), veh/h	318	861	448	277	821	432	285	1597	768	287	1599	775
V/C Ratio(X)	0.85	1.15	1.15	0.83	0.90	0.90	0.87	0.51	0.51	0.89	0.51	0.51
Avail Cap(c_a), veh/h	1032	861	448	1032	848	446	287	1597	768	287	1599	775
HCM Platoon Ratio	1.00	1.00	1.00	1.00	1.00	1.00	1.00	1.00	1.00	1.00	1.00	1.00
Upstream Filter(I)	1.00	1.00	1.00	1.00	1.00	1.00	1.00	1.00	1.00	1.00	1.00	1.00
Uniform Delay (d), s/veh	80.5	67.1	67.1	81.6	66.1	66.1	81.6	33.2	33.2	81.7	33.1	33.1
Incr Delay (d2), s/veh	4.8	82.3	91.8	4.9	12.1	20.5	23.6	1.2	2.4	25.6	1.2	2.4
Initial Q Delay(d3),s/veh	0.0	0.0	0.0	0.0	0.0	0.0	0.0	0.0	0.0	0.0	0.0	0.0
%ile BackOfQ(50%),veh/ln	6.9	31.3	33.7	5.9	19.2	21.2	7.1	14.4	14.2	7.3	14.4	14.3
LnGrp Delay(d),s/veh	85.3	149.4	158.9	86.5	78.1	86.6	105.2	34.3	35.7	107.3	34.3	35.5
LnGrp LOS	F	F	F	F	E	F	F	C	D	F	C	D
Approach Vol, veh/h		1782			1356			1459			1466	
Approach Delay, s/veh		142.4			82.0			46.8			47.2	
Approach LOS		F			F			D			D	

Timer	1	2	3	4	5	6	7	8
Assigned Phs	1	2	3	4	5	6	7	8
Phs Duration (G+Y+Rc), s	18.9	90.9	20.7	49.6	19.0	90.8	18.5	51.7
Change Period (Y+Rc), s	4.0	6.0	4.0	6.0	4.0	6.0	4.0	6.0
Max Green Setting (Gmax), s	15.0	46.0	54.0	45.0	15.0	46.0	54.0	45.0
Max Q Clear Time (g_c+I1), s	14.9	32.3	16.0	40.0	15.1	32.3	13.9	47.7
Green Ext Time (p_c), s	0.0	5.8	0.7	3.6	0.0	5.8	0.6	0.0

Intersection Summary	
HCM 2010 Ctrl Delay	82.9
HCM 2010 LOS	F

Movement	EBL	EBT	EBR	WBL	WBT	WBR	NBL	NBT	NBR	SBL	SBT	SBR
Lane Configurations												
Traffic Volume (veh/h)	103	1590	31	0	908	126	83	42	5	268	92	283
Future Volume (veh/h)	103	1590	31	0	908	126	83	42	5	268	92	283
Number	1	6	16	5	2	12	7	4	14	3	8	18
Initial Q (Qb), veh	0	0	0	0	0	0	0	0	0	0	0	0
Ped-Bike Adj(A_pbT)	1.00		1.00	1.00		1.00	1.00		1.00	1.00		1.00
Parking Bus, Adj	1.00	1.00	1.00	1.00	1.00	1.00	1.00	1.00	1.00	1.00	1.00	1.00
Adj Sat Flow, veh/h/ln	1863	1863	1900	0	1863	1900	1863	1863	1863	1863	1863	1863
Adj Flow Rate, veh/h	114	1767	34	0	987	137	104	52	6	291	100	308
Adj No. of Lanes	1	2	0	0	2	0	1	1	1	1	1	1
Peak Hour Factor	0.90	0.90	0.90	0.92	0.92	0.92	0.80	0.80	0.80	0.92	0.92	0.92
Percent Heavy Veh, %	2	2	2	0	2	2	2	2	2	2	2	2
Cap, veh/h	336	2486	48	0	1961	272	222	269	229	289	269	229
Arrive On Green	0.04	0.70	0.70	0.00	0.63	0.63	0.05	0.14	0.14	0.05	0.14	0.14
Sat Flow, veh/h	1774	3552	68	0	3216	433	1774	1863	1583	1774	1863	1583
Grp Volume(v), veh/h	114	878	923	0	559	565	104	52	6	291	100	308
Grp Sat Flow(s),veh/h/ln	1774	1770	1851	0	1770	1786	1774	1863	1583	1774	1863	1583
Q Serve(g_s), s	4.0	53.2	53.7	0.0	30.9	31.0	9.0	4.4	0.6	9.0	8.7	26.0
Cycle Q Clear(g_c), s	4.0	53.2	53.7	0.0	30.9	31.0	9.0	4.4	0.6	9.0	8.7	26.0
Prop In Lane	1.00		0.04	0.00		0.24	1.00		1.00	1.00		1.00
Lane Grp Cap(c), veh/h	336	1239	1295	0	1111	1122	222	269	229	289	269	229
V/C Ratio(X)	0.34	0.71	0.71	0.00	0.50	0.50	0.47	0.19	0.03	1.01	0.37	1.35
Avail Cap(c_a), veh/h	396	1239	1295	0	1111	1122	222	269	229	289	269	229
HCM Platoon Ratio	1.00	1.00	1.00	1.00	1.00	1.00	1.00	1.00	1.00	1.00	1.00	1.00
Upstream Filter(I)	1.00	1.00	1.00	0.00	1.00	1.00	1.00	1.00	1.00	1.00	1.00	1.00
Uniform Delay (d), s/veh	13.9	16.1	16.2	0.0	18.2	18.2	62.3	67.8	66.1	74.7	69.6	77.0
Incr Delay (d2), s/veh	0.2	3.4	3.4	0.0	1.6	1.6	0.6	1.6	0.2	54.4	3.9	182.2
Initial Q Delay(d3),s/veh	0.0	0.0	0.0	0.0	0.0	0.0	0.0	0.0	0.0	0.0	0.0	0.0
%ile BackOfQ(50%),veh/ln	2.0	27.0	28.4	0.0	15.6	15.7	4.4	2.4	0.3	26.7	4.8	22.9
LnGrp Delay(d),s/veh	14.1	19.5	19.5	0.0	19.8	19.8	62.9	69.4	66.3	129.1	73.5	259.2
LnGrp LOS	B	B	B		B	B	E	E	E	F	E	F
Approach Vol, veh/h		1915			1124			162			699	
Approach Delay, s/veh		19.2			19.8			65.1			178.5	
Approach LOS		B			B			E			F	

Timer	1	2	3	4	5	6	7	8
Assigned Phs	1	2	3	4		6	7	8
Phs Duration (G+Y+Rc), s	13.0	119.0	15.0	33.0		132.0	15.0	33.0
Change Period (Y+Rc), s	6.0	6.0	6.0	7.0		6.0	6.0	7.0
Max Green Setting (Gmax), s	13.0	107.0	9.0	26.0		126.0	9.0	26.0
Max Q Clear Time (g_c+I1), s	6.0	33.0	11.0	6.4		55.7	11.0	28.0
Green Ext Time (p_c), s	0.1	9.3	0.0	1.4		9.3	0.0	0.0

Intersection Summary	
HCM 2010 Ctrl Delay	49.8
HCM 2010 LOS	D

Movement	EBL	EBT	EBR	WBL	WBT	WBR	NBL	NBT	NBR	SBL	SBT	SBR
Lane Configurations												
Traffic Volume (veh/h)	365	972	219	202	704	171	271	1269	120	380	1586	200
Future Volume (veh/h)	365	972	219	202	704	171	271	1269	120	380	1586	200
Number	3	8	18	7	4	14	1	6	16	5	2	12
Initial Q (Qb), veh	0	0	0	0	0	0	0	0	0	0	0	0
Ped-Bike Adj(A_pbT)	1.00		1.00	1.00		1.00	1.00		1.00	1.00		1.00
Parking Bus, Adj	1.00	1.00	1.00	1.00	1.00	1.00	1.00	1.00	1.00	1.00	1.00	1.00
Adj Sat Flow, veh/h/ln	1863	1863	1863	1863	1863	1863	1863	1863	1900	1863	1863	1900
Adj Flow Rate, veh/h	392	1045	235	235	819	199	335	1567	148	392	1635	206
Adj No. of Lanes	2	3	1	2	3	1	2	3	0	2	3	0
Peak Hour Factor	0.93	0.93	0.93	0.86	0.86	0.86	0.81	0.81	0.81	0.97	0.97	0.97
Percent Heavy Veh, %	2	2	2	2	2	2	2	2	2	2	2	2
Cap, veh/h	436	1147	532	280	917	486	380	2049	193	435	2057	258
Arrive On Green	0.13	0.23	0.23	0.08	0.18	0.18	0.11	0.43	0.43	0.13	0.45	0.45
Sat Flow, veh/h	3442	5085	1583	3442	5085	1583	3442	4728	446	3442	4576	575
Grp Volume(v), veh/h	392	1045	235	235	819	199	335	1123	592	392	1210	631
Grp Sat Flow(s),veh/h/ln	1721	1695	1583	1721	1695	1583	1721	1695	1784	1721	1695	1761
Q Serve(g_s), s	18.5	33.1	19.1	11.1	26.0	16.4	15.8	46.3	46.4	18.5	50.4	50.7
Cycle Q Clear(g_c), s	18.5	33.1	19.1	11.1	26.0	16.4	15.8	46.3	46.4	18.5	50.4	50.7
Prop In Lane	1.00		1.00	1.00		1.00	1.00		0.25	1.00		0.33
Lane Grp Cap(c), veh/h	436	1147	532	280	917	486	380	1470	773	435	1524	792
V/C Ratio(X)	0.90	0.91	0.44	0.84	0.89	0.41	0.88	0.76	0.77	0.90	0.79	0.80
Avail Cap(c_a), veh/h	521	1147	532	521	1017	517	501	1470	773	501	1524	792
HCM Platoon Ratio	1.00	1.00	1.00	1.00	1.00	1.00	1.00	1.00	1.00	1.00	1.00	1.00
Upstream Filter(I)	1.00	1.00	1.00	1.00	1.00	1.00	1.00	1.00	1.00	1.00	1.00	1.00
Uniform Delay (d), s/veh	71.0	62.3	42.7	74.7	66.1	45.4	72.3	39.6	39.6	71.1	38.9	39.0
Incr Delay (d2), s/veh	15.1	10.8	0.4	2.6	9.2	0.4	11.4	3.8	7.1	16.6	4.4	8.2
Initial Q Delay(d3),s/veh	0.0	0.0	0.0	0.0	0.0	0.0	0.0	0.0	0.0	0.0	0.0	0.0
%ile BackOfQ(50%),veh/ln	9.7	16.6	8.4	5.4	13.0	7.3	8.1	22.5	24.4	9.8	24.4	26.5
LnGrp Delay(d),s/veh	86.2	73.1	43.2	77.3	75.3	45.8	83.8	43.4	46.7	87.7	43.2	47.2
LnGrp LOS	F	E	D	E	E	D	F	D	D	F	D	D
Approach Vol, veh/h		1672			1253			2050			2233	
Approach Delay, s/veh		71.9			71.0			51.0			52.1	
Approach LOS		E			E			D			D	

Timer	1	2	3	4	5	6	7	8
Assigned Phs	1	2	3	4	5	6	7	8
Phs Duration (G+Y+Rc), s	23.2	80.2	25.9	35.8	25.8	77.5	18.4	43.2
Change Period (Y+Rc), s	5.0	6.0	5.0	6.0	5.0	6.0	5.0	6.0
Max Green Setting (Gmax), s	24.0	61.0	25.0	33.0	24.0	61.0	25.0	33.0
Max Q Clear Time (g_c+I1), s	17.8	52.7	20.5	28.0	20.5	48.4	13.1	35.1
Green Ext Time (p_c), s	0.4	6.5	0.4	1.8	0.3	9.1	0.3	0.0

Intersection Summary	
HCM 2010 Ctrl Delay	59.7
HCM 2010 LOS	E

Movement	EBL	EBT	EBR	WBL	WBT	WBR	NBL	NBT	NBR	SBL	SBT	SBR
Lane Configurations												
Traffic Volume (veh/h)	889	1347	554	202	689	107	349	311	161	177	216	216
Future Volume (veh/h)	889	1347	554	202	689	107	349	311	161	177	216	216
Number	1	6	16	5	2	12	7	4	14	3	8	18
Initial Q (Qb), veh	0	0	0	0	0	0	0	0	0	0	0	0
Ped-Bike Adj(A_pbT)	1.00		1.00	1.00		1.00	1.00		1.00	1.00		1.00
Parking Bus, Adj	1.00	1.00	1.00	1.00	1.00	1.00	1.00	1.00	1.00	1.00	1.00	1.00
Adj Sat Flow, veh/h/ln	1863	1863	1863	1863	1863	1900	1863	1863	1900	1863	1863	1900
Adj Flow Rate, veh/h	956	1448	596	222	757	118	379	338	175	184	225	225
Adj No. of Lanes	2	2	1	1	3	0	1	2	0	1	2	0
Peak Hour Factor	0.93	0.93	0.93	0.91	0.91	0.91	0.92	0.92	0.92	0.96	0.96	0.96
Percent Heavy Veh, %	2	2	2	2	2	2	2	2	2	2	2	2
Cap, veh/h	1156	1724	771	251	1132	175	238	476	242	199	302	270
Arrive On Green	0.34	0.49	0.49	0.10	0.25	0.25	0.09	0.21	0.21	0.06	0.17	0.17
Sat Flow, veh/h	3442	3539	1583	1774	4444	687	1774	2274	1155	1774	1770	1583
Grp Volume(v), veh/h	956	1448	596	222	576	299	379	262	251	184	225	225
Grp Sat Flow(s),veh/h/ln	1721	1770	1583	1774	1695	1741	1774	1770	1659	1774	1770	1583
Q Serve(g_s), s	46.0	63.9	55.7	16.5	27.5	27.8	17.0	24.7	25.4	10.0	21.8	24.7
Cycle Q Clear(g_c), s	46.0	63.9	55.7	16.5	27.5	27.8	17.0	24.7	25.4	10.0	21.8	24.7
Prop In Lane	1.00		1.00	1.00		0.39	1.00		0.70	1.00		1.00
Lane Grp Cap(c), veh/h	1156	1724	771	251	864	444	238	370	347	199	302	270
V/C Ratio(X)	0.83	0.84	0.77	0.88	0.67	0.67	1.59	0.71	0.72	0.93	0.75	0.83
Avail Cap(c_a), veh/h	1156	1724	771	294	1036	532	238	442	415	199	374	334
HCM Platoon Ratio	1.00	1.00	1.00	1.00	1.00	1.00	1.00	1.00	1.00	1.00	1.00	1.00
Upstream Filter(I)	1.00	1.00	1.00	1.00	1.00	1.00	1.00	1.00	1.00	1.00	1.00	1.00
Uniform Delay (d), s/veh	55.0	40.1	38.0	46.7	60.2	60.3	60.7	66.0	66.3	68.9	71.0	72.2
Incr Delay (d2), s/veh	5.1	3.7	4.4	21.5	0.8	1.6	284.2	3.6	4.4	42.8	5.6	12.9
Initial Q Delay(d3),s/veh	0.0	0.0	0.0	0.0	0.0	0.0	0.0	0.0	0.0	0.0	0.0	0.0
%ile BackOfQ(50%),veh/ln	22.7	32.1	25.3	9.6	13.0	13.6	22.3	12.4	12.1	9.9	11.2	11.8
LnGrp Delay(d),s/veh	60.0	43.7	42.4	68.2	61.0	62.0	344.9	69.6	70.8	111.7	76.5	85.1
LnGrp LOS	E	D	D	E	E	E	F	E	E	F	E	F
Approach Vol, veh/h		3000			1097			892			634	
Approach Delay, s/veh		48.7			62.7			186.9			89.8	
Approach LOS		D			E			F			F	

Timer	1	2	3	4	5	6	7	8
Assigned Phs	1	2	3	4	5	6	7	8
Phs Duration (G+Y+Rc), s	66.5	51.9	17.0	44.7	24.6	93.7	24.0	37.7
Change Period (Y+Rc), s	6.0	6.0	7.0	7.0	6.0	6.0	7.0	7.0
Max Green Setting (Gmax), s	44.0	55.0	10.0	45.0	23.0	76.0	17.0	38.0
Max Q Clear Time (g_c+I1), s	48.0	29.8	12.0	27.4	18.5	65.9	19.0	26.7
Green Ext Time (p_c), s	0.0	7.7	0.0	4.8	0.1	5.3	0.0	3.9

Intersection Summary	
HCM 2010 Ctrl Delay	78.0
HCM 2010 LOS	E

Movement	EBL	EBT	EBR	WBL	WBT	WBR	NBL	NBT	NBR	SBL	SBT	SBR
Lane Configurations												
Traffic Volume (veh/h)	200	1331	170	133	748	146	177	98	171	112	60	72
Future Volume (veh/h)	200	1331	170	133	748	146	177	98	171	112	60	72
Number	1	6	16	5	2	12	7	4	14	3	8	18
Initial Q (Qb), veh	0	0	0	0	0	0	0	0	0	0	0	0
Ped-Bike Adj(A_pbT)	1.00		1.00	1.00		1.00	1.00		1.00	1.00		1.00
Parking Bus, Adj	1.00	1.00	1.00	1.00	1.00	1.00	1.00	1.00	1.00	1.00	1.00	1.00
Adj Sat Flow, veh/h/ln	1863	1863	1900	1863	1863	1900	1863	1863	1863	1863	1863	1863
Adj Flow Rate, veh/h	215	1431	183	140	787	154	199	110	192	129	69	83
Adj No. of Lanes	1	2	0	1	2	0	1	1	1	1	1	1
Peak Hour Factor	0.93	0.93	0.93	0.95	0.95	0.95	0.89	0.89	0.89	0.87	0.87	0.87
Percent Heavy Veh, %	2	2	2	2	2	2	2	2	2	2	2	2
Cap, veh/h	523	2027	257	232	1852	362	303	251	214	265	251	214
Arrive On Green	0.06	0.64	0.64	0.09	1.00	1.00	0.07	0.13	0.13	0.07	0.13	0.13
Sat Flow, veh/h	1774	3161	401	1774	2953	578	1774	1863	1583	1774	1863	1583
Grp Volume(v), veh/h	215	795	819	140	472	469	199	110	192	129	69	83
Grp Sat Flow(s),veh/h/ln	1774	1770	1792	1774	1770	1761	1774	1863	1583	1774	1863	1583
Q Serve(g_s), s	6.4	43.9	45.3	4.4	0.0	0.0	11.0	8.1	17.9	9.3	5.0	7.2
Cycle Q Clear(g_c), s	6.4	43.9	45.3	4.4	0.0	0.0	11.0	8.1	17.9	9.3	5.0	7.2
Prop In Lane	1.00		0.22	1.00		0.33	1.00		1.00	1.00		1.00
Lane Grp Cap(c), veh/h	523	1135	1149	232	1110	1105	303	251	214	265	251	214
V/C Ratio(X)	0.41	0.70	0.71	0.60	0.42	0.42	0.66	0.44	0.90	0.49	0.27	0.39
Avail Cap(c_a), veh/h	597	1135	1149	331	1110	1105	303	261	222	265	261	222
HCM Platoon Ratio	1.00	1.00	1.00	2.00	2.00	2.00	1.00	1.00	1.00	1.00	1.00	1.00
Upstream Filter(I)	1.00	1.00	1.00	0.79	0.79	0.79	1.00	1.00	1.00	1.00	1.00	1.00
Uniform Delay (d), s/veh	8.1	17.5	17.8	18.8	0.0	0.0	54.5	59.7	63.9	51.0	58.3	59.2
Incr Delay (d2), s/veh	0.5	3.6	3.8	2.0	0.9	0.9	5.1	1.7	34.7	1.4	0.8	1.6
Initial Q Delay(d3),s/veh	0.0	0.0	0.0	0.0	0.0	0.0	0.0	0.0	0.0	0.0	0.0	0.0
%ile BackOfQ(50%),veh/ln	3.1	22.6	23.5	2.9	0.3	0.3	2.8	4.3	9.9	4.7	2.6	3.3
LnGrp Delay(d),s/veh	8.6	21.2	21.6	20.8	0.9	0.9	59.6	61.4	98.6	52.3	59.1	60.9
LnGrp LOS	A	C	C	C	A	A	E	E	F	D	E	E
Approach Vol, veh/h		1829			1081			501			281	
Approach Delay, s/veh		19.9			3.5			74.9			56.5	
Approach LOS		B			A			E			E	

Timer	1	2	3	4	5	6	7	8
Assigned Phs	1	2	3	4	5	6	7	8
Phs Duration (G+Y+Rc), s	11.7	99.1	14.0	25.2	9.6	101.2	14.0	25.2
Change Period (Y+Rc), s	3.0	5.0	3.0	5.0	3.0	5.0	3.0	5.0
Max Green Setting (Gmax), s	15.0	87.0	11.0	21.0	15.0	87.0	11.0	21.0
Max Q Clear Time (g_c+I1), s	8.4	2.0	11.3	19.9	6.4	47.3	13.0	9.2
Green Ext Time (p_c), s	0.3	60.1	0.0	0.3	0.2	33.3	0.0	2.2

Intersection Summary	
HCM 2010 Ctrl Delay	25.3
HCM 2010 LOS	C

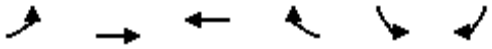

Movement	EBL	EBT	WBT	WBR	SBL	SBR
Lane Configurations						
Traffic Volume (veh/h)	214	1400	939	282	224	88
Future Volume (veh/h)	214	1400	939	282	224	88
Number	1	6	2	12	3	18
Initial Q (Qb), veh	0	0	0	0	0	0
Ped-Bike Adj(A_pbT)	1.00			1.00	1.00	1.00
Parking Bus, Adj	1.00	1.00	1.00	1.00	1.00	1.00
Adj Sat Flow, veh/h/ln	1863	1863	1863	1900	1863	1863
Adj Flow Rate, veh/h	223	1458	999	300	241	95
Adj No. of Lanes	1	2	2	0	1	1
Peak Hour Factor	0.96	0.96	0.94	0.94	0.93	0.93
Percent Heavy Veh, %	2	2	2	2	2	2
Cap, veh/h	366	2766	1911	571	269	240
Arrive On Green	0.10	1.00	0.71	0.71	0.15	0.15
Sat Flow, veh/h	1774	3632	2781	803	1774	1583
Grp Volume(v), veh/h	223	1458	656	643	241	95
Grp Sat Flow(s),veh/h/ln	1774	1770	1770	1721	1774	1583
Q Serve(g_s), s	5.4	0.0	25.5	25.9	20.0	8.1
Cycle Q Clear(g_c), s	5.4	0.0	25.5	25.9	20.0	8.1
Prop In Lane	1.00			0.47	1.00	1.00
Lane Grp Cap(c), veh/h	366	2766	1258	1223	269	240
V/C Ratio(X)	0.61	0.53	0.52	0.53	0.90	0.40
Avail Cap(c_a), veh/h	453	2766	1258	1223	603	538
HCM Platoon Ratio	2.00	2.00	1.00	1.00	1.00	1.00
Upstream Filter(I)	0.64	0.64	1.00	1.00	1.00	1.00
Uniform Delay (d), s/veh	9.1	0.0	10.0	10.0	62.5	57.4
Incr Delay (d2), s/veh	0.8	0.5	1.5	1.6	7.9	0.8
Initial Q Delay(d3),s/veh	0.0	0.0	0.0	0.0	0.0	0.0
%ile BackOfQ(50%),veh/ln	3.2	0.2	12.9	12.7	10.4	3.6
LnGrp Delay(d),s/veh	9.9	0.5	11.5	11.6	70.3	58.2
LnGrp LOS	A	A	B	B	E	E
Approach Vol, veh/h		1681	1299		336	
Approach Delay, s/veh		1.7	11.6		66.9	
Approach LOS		A	B		E	

Timer	1	2	3	4	5	6	7	8
Assigned Phs	1	2				6		8
Phs Duration (G+Y+Rc), s	10.6	111.6				122.3		27.7
Change Period (Y+Rc), s	3.0	5.0				5.0		5.0
Max Green Setting (Gmax), s	15.0	71.0				89.0		51.0
Max Q Clear Time (g_c+I1), s	7.4	27.9				2.0		22.0
Green Ext Time (p_c), s	0.3	9.5				9.8		0.7

Intersection Summary	
HCM 2010 Ctrl Delay	12.2
HCM 2010 LOS	B

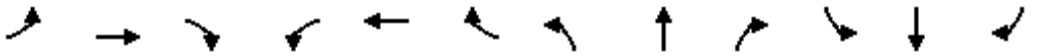

Movement	EBL	EBT	EBR	WBL	WBT	WBR	NBL	NBT	NBR	SBL	SBT	SBR
Lane Configurations												
Traffic Volume (vph)	61	1475	47	73	1125	112	69	17	75	51	4	35
Future Volume (vph)	61	1475	47	73	1125	112	69	17	75	51	4	35
Ideal Flow (vphpl)	1900	1900	1900	1900	1900	1900	1900	1900	1900	1900	1900	1900
Total Lost time (s)	5.0	5.0		5.0	5.0			6.0	6.0		6.0	6.0
Lane Util. Factor	1.00	0.95		1.00	0.95			1.00	1.00		1.00	1.00
Frt	1.00	1.00		1.00	0.99			1.00	0.85		1.00	0.85
Flt Protected	0.95	1.00		0.95	1.00			0.96	1.00		0.96	1.00
Satd. Flow (prot)	1770	3523		1770	3491			1791	1583		1780	1583
Flt Permitted	0.18	1.00		0.12	1.00			0.96	1.00		0.96	1.00
Satd. Flow (perm)	337	3523		218	3491			1791	1583		1780	1583
Peak-hour factor, PHF	0.95	0.95	0.95	0.96	0.96	0.96	0.83	0.83	0.83	0.91	0.91	0.91
Adj. Flow (vph)	64	1553	49	76	1172	117	83	20	90	56	4	38
RTOR Reduction (vph)	0	1	0	0	5	0	0	0	83	0	0	36
Lane Group Flow (vph)	64	1601	0	76	1284	0	0	103	7	0	60	2
Turn Type	Perm	NA		Perm	NA		Split	NA	Perm	Split	NA	Perm
Protected Phases		6			2		4	4		3	3	
Permitted Phases	6			2					4			3
Actuated Green, G (s)	112.4	112.4		112.4	112.4			12.0	12.0		8.6	8.6
Effective Green, g (s)	112.4	112.4		112.4	112.4			12.0	12.0		8.6	8.6
Actuated g/C Ratio	0.75	0.75		0.75	0.75			0.08	0.08		0.06	0.06
Clearance Time (s)	5.0	5.0		5.0	5.0			6.0	6.0		6.0	6.0
Vehicle Extension (s)	1.0	1.0		1.0	1.0			2.5	2.5		2.5	2.5
Lane Grp Cap (vph)	252	2639		163	2615			143	126		102	90
v/s Ratio Prot		c0.45			0.37			c0.06			c0.03	
v/s Ratio Perm	0.19			0.35					0.00			0.00
v/c Ratio	0.25	0.61		0.47	0.49			0.72	0.06		0.59	0.02
Uniform Delay, d1	5.8	8.6		7.2	7.5			67.4	63.8		69.0	66.7
Progression Factor	0.52	0.52		1.23	1.23			1.00	1.00		1.00	1.00
Incremental Delay, d2	2.1	0.9		8.3	0.6			15.4	0.1		7.0	0.1
Delay (s)	5.1	5.4		17.2	9.8			82.7	63.9		76.0	66.8
Level of Service	A	A		B	A			F	E		E	E
Approach Delay (s)		5.4			10.2			74.0			72.4	
Approach LOS		A			B			E			E	

Intersection Summary			
HCM 2000 Control Delay	13.3	HCM 2000 Level of Service	B
HCM 2000 Volume to Capacity ratio	0.62		
Actuated Cycle Length (s)	150.0	Sum of lost time (s)	17.0
Intersection Capacity Utilization	80.3%	ICU Level of Service	D
Analysis Period (min)	15		

c Critical Lane Group

Movement	EBT	EBR	WBL	WBT	NBL	NBR
Lane Configurations						
Traffic Volume (veh/h)	1345	256	237	1079	231	320
Future Volume (veh/h)	1345	256	237	1079	231	320
Number	6	16	5	2	7	14
Initial Q (Qb), veh	0	0	0	0	0	0
Ped-Bike Adj(A_pbT)		1.00	1.00		1.00	1.00
Parking Bus, Adj	1.00	1.00	1.00	1.00	1.00	1.00
Adj Sat Flow, veh/h/ln	1863	1900	1863	1863	1863	1863
Adj Flow Rate, veh/h	1387	264	260	1186	254	352
Adj No. of Lanes	2	0	1	2	1	1
Peak Hour Factor	0.97	0.97	0.91	0.91	0.91	0.91
Percent Heavy Veh, %	2	2	2	2	2	2
Cap, veh/h	1905	357	273	2595	355	317
Arrive On Green	0.64	0.64	0.15	1.00	0.20	0.20
Sat Flow, veh/h	3069	558	1774	3632	1774	1583
Grp Volume(v), veh/h	816	835	260	1186	254	352
Grp Sat Flow(s),veh/h/ln	1770	1764	1774	1770	1774	1583
Q Serve(g_s), s	46.2	48.5	9.4	0.0	20.1	30.0
Cycle Q Clear(g_c), s	46.2	48.5	9.4	0.0	20.1	30.0
Prop In Lane		0.32	1.00		1.00	1.00
Lane Grp Cap(c), veh/h	1133	1129	273	2595	355	317
V/C Ratio(X)	0.72	0.74	0.95	0.46	0.72	1.11
Avail Cap(c_a), veh/h	1133	1129	273	2595	355	317
HCM Platoon Ratio	1.00	1.00	2.00	2.00	1.00	1.00
Upstream Filter(I)	0.78	0.78	0.85	0.85	1.00	1.00
Uniform Delay (d), s/veh	18.0	18.5	29.4	0.0	56.0	60.0
Incr Delay (d2), s/veh	3.1	3.4	37.0	0.5	6.4	84.0
Initial Q Delay(d3),s/veh	0.0	0.0	0.0	0.0	0.0	0.0
%ile BackOfQ(50%),veh/ln	23.4	24.5	13.2	0.2	10.4	31.1
LnGrp Delay(d),s/veh	21.1	21.9	66.4	0.5	62.4	144.0
LnGrp LOS	C	C	E	A	E	F
Approach Vol, veh/h	1651			1446	606	
Approach Delay, s/veh	21.5			12.3	109.8	
Approach LOS	C			B	F	

Timer	1	2	3	4	5	6	7	8
Assigned Phs		2		4	5	6		
Phs Duration (G+Y+Rc), s		115.0		35.0	14.0	101.0		
Change Period (Y+Rc), s		5.0		5.0	3.0	5.0		
Max Green Setting (Gmax), s		110.0		30.0	11.0	96.0		
Max Q Clear Time (g_c+I1), s		2.0		32.0	11.4	50.5		
Green Ext Time (p_c), s		10.1		0.0	0.0	9.9		

Intersection Summary	
HCM 2010 Ctrl Delay	32.4
HCM 2010 LOS	C

Movement	EBL	EBT	EBR	WBL	WBT	WBR	NBL	NBT	NBR	SBL	SBT	SBR
Lane Configurations												
Traffic Volume (veh/h)	71	1309	285	123	1199	21	100	1	89	12	1	19
Future Volume (veh/h)	71	1309	285	123	1199	21	100	1	89	12	1	19
Number	1	6	16	5	2	12	7	4	14	3	8	18
Initial Q (Qb), veh	0	0	0	0	0	0	0	0	0	0	0	0
Ped-Bike Adj(A_pbT)	1.00		1.00	1.00		1.00	1.00		1.00	1.00		1.00
Parking Bus, Adj	1.00	1.00	1.00	1.00	1.00	1.00	1.00	1.00	1.00	1.00	1.00	1.00
Adj Sat Flow, veh/h/ln	1863	1863	1900	1863	1863	1900	1863	1863	1900	1900	1863	1900
Adj Flow Rate, veh/h	78	1438	313	129	1262	22	119	1	106	18	1	28
Adj No. of Lanes	1	2	0	1	2	0	1	1	0	0	1	0
Peak Hour Factor	0.91	0.91	0.91	0.95	0.95	0.95	0.84	0.84	0.84	0.67	0.67	0.67
Percent Heavy Veh, %	2	2	2	2	2	2	2	2	2	2	2	2
Cap, veh/h	423	2154	458	310	2643	46	191	2	197	68	16	75
Arrive On Green	0.06	1.00	1.00	0.07	1.00	1.00	0.13	0.13	0.13	0.13	0.13	0.13
Sat Flow, veh/h	1774	2905	618	1774	3559	62	1375	15	1571	276	131	600
Grp Volume(v), veh/h	78	863	888	129	627	657	119	0	107	47	0	0
Grp Sat Flow(s),veh/h/ln	1774	1770	1754	1774	1770	1852	1375	0	1586	1007	0	0
Q Serve(g_s), s	1.6	0.0	0.0	2.8	0.0	0.0	5.6	0.0	9.5	0.9	0.0	0.0
Cycle Q Clear(g_c), s	1.6	0.0	0.0	2.8	0.0	0.0	15.9	0.0	9.5	10.4	0.0	0.0
Prop In Lane	1.00		0.35	1.00		0.03	1.00		0.99	0.38		0.60
Lane Grp Cap(c), veh/h	423	1312	1300	310	1314	1375	191	0	199	160	0	0
V/C Ratio(X)	0.18	0.66	0.68	0.42	0.48	0.48	0.62	0.00	0.54	0.29	0.00	0.00
Avail Cap(c_a), veh/h	484	1312	1300	369	1314	1375	330	0	359	307	0	0
HCM Platoon Ratio	2.00	2.00	2.00	2.00	2.00	2.00	1.00	1.00	1.00	1.00	1.00	1.00
Upstream Filter(I)	0.56	0.56	0.56	1.00	1.00	1.00	1.00	0.00	1.00	1.00	0.00	0.00
Uniform Delay (d), s/veh	3.9	0.0	0.0	4.0	0.0	0.0	65.0	0.0	61.5	60.0	0.0	0.0
Incr Delay (d2), s/veh	0.0	1.4	1.6	0.3	1.2	1.2	2.5	0.0	1.7	0.8	0.0	0.0
Initial Q Delay(d3),s/veh	0.0	0.0	0.0	0.0	0.0	0.0	0.0	0.0	0.0	0.0	0.0	0.0
%ile BackOfQ(50%),veh/ln	0.7	0.5	0.6	1.3	0.5	0.5	5.0	0.0	4.3	1.9	0.0	0.0
LnGrp Delay(d),s/veh	3.9	1.4	1.6	4.3	1.2	1.2	67.5	0.0	63.2	60.8	0.0	0.0
LnGrp LOS	A	A	A	A	A	A	E		E	E		
Approach Vol, veh/h		1829			1413			226			47	
Approach Delay, s/veh		1.6			1.5			65.4			60.8	
Approach LOS		A			A			E			E	

Timer	1	2	3	4	5	6	7	8
Assigned Phs	1	2		4	5	6		8
Phs Duration (G+Y+Rc), s	7.8	117.4		24.8	8.0	117.2		24.8
Change Period (Y+Rc), s	3.0	6.0		6.0	3.0	6.0		6.0
Max Green Setting (Gmax), s	10.0	91.0		34.0	10.0	91.0		34.0
Max Q Clear Time (g_c+I1), s	3.6	2.0		17.9	4.8	2.0		12.4
Green Ext Time (p_c), s	0.0	10.1		0.9	0.1	10.1		1.0

Intersection Summary		
HCM 2010 Ctrl Delay		6.5
HCM 2010 LOS		A

Movement	EBL	EBT	EBR	WBL	WBT	WBR	NBL	NBT	NBR	SBL	SBT	SBR
Lane Configurations												
Traffic Volume (veh/h)	7	1149	254	359	1164	8	168	0	227	4	5	11
Future Volume (veh/h)	7	1149	254	359	1164	8	168	0	227	4	5	11
Number	1	6	16	5	2	12	7	4	14	3	8	18
Initial Q (Qb), veh	0	0	0	0	0	0	0	0	0	0	0	0
Ped-Bike Adj(A_pbT)	1.00		1.00	1.00		1.00	1.00		1.00	1.00		1.00
Parking Bus, Adj	1.00	1.00	1.00	1.00	1.00	1.00	1.00	1.00	1.00	1.00	1.00	1.00
Adj Sat Flow, veh/h/ln	1863	1863	1900	1863	1863	1900	1863	1863	1863	1900	1863	1900
Adj Flow Rate, veh/h	7	1209	267	378	1225	8	179	0	241	5	6	14
Adj No. of Lanes	1	2	0	1	2	0	1	1	1	0	1	0
Peak Hour Factor	0.95	0.95	0.95	0.95	0.95	0.95	0.94	0.94	0.94	0.81	0.81	0.81
Percent Heavy Veh, %	2	2	2	2	2	2	2	2	2	2	2	2
Cap, veh/h	347	1921	420	142	2757	18	287	314	267	65	81	148
Arrive On Green	1.00	1.00	1.00	0.16	1.00	1.00	0.17	0.00	0.17	0.17	0.17	0.17
Sat Flow, veh/h	450	2889	632	1774	3605	24	1386	1863	1583	213	478	880
Grp Volume(v), veh/h	7	736	740	378	601	632	179	0	241	25	0	0
Grp Sat Flow(s),veh/h/ln	450	1770	1751	1774	1770	1859	1386	1863	1583	1571	0	0
Q Serve(g_s), s	0.0	0.0	0.0	12.0	0.0	0.0	16.0	0.0	22.4	0.0	0.0	0.0
Cycle Q Clear(g_c), s	0.0	0.0	0.0	12.0	0.0	0.0	17.9	0.0	22.4	1.9	0.0	0.0
Prop In Lane	1.00		0.36	1.00		0.01	1.00		1.00	0.20		0.56
Lane Grp Cap(c), veh/h	347	1176	1164	142	1353	1421	287	314	267	294	0	0
V/C Ratio(X)	0.02	0.63	0.64	2.66	0.44	0.44	0.62	0.00	0.90	0.09	0.00	0.00
Avail Cap(c_a), veh/h	347	1176	1164	142	1353	1421	339	385	327	351	0	0
HCM Platoon Ratio	2.00	2.00	2.00	2.00	2.00	2.00	1.00	1.00	1.00	1.00	1.00	1.00
Upstream Filter(I)	1.00	1.00	1.00	0.69	0.69	0.69	1.00	0.00	1.00	1.00	0.00	0.00
Uniform Delay (d), s/veh	0.0	0.0	0.0	63.0	0.0	0.0	59.1	0.0	61.2	52.6	0.0	0.0
Incr Delay (d2), s/veh	0.1	2.5	2.7	762.2	0.7	0.7	2.7	0.0	23.8	0.1	0.0	0.0
Initial Q Delay(d3),s/veh	0.0	0.0	0.0	0.0	0.0	0.0	0.0	0.0	0.0	0.0	0.0	0.0
%ile BackOfQ(50%),veh/ln	0.0	0.8	0.9	35.9	0.3	0.3	7.3	0.0	11.6	0.9	0.0	0.0
LnGrp Delay(d),s/veh	0.1	2.5	2.7	825.2	0.7	0.7	61.7	0.0	85.0	52.7	0.0	0.0
LnGrp LOS	A	A	A	F	A	A	E		F	D		
Approach Vol, veh/h		1483			1611			420			25	
Approach Delay, s/veh		2.6			194.2			75.1			52.7	
Approach LOS		A			F			E			D	

Timer	1	2	3	4	5	6	7	8
Assigned Phs		2		4	5	6		8
Phs Duration (G+Y+Rc), s		119.7		30.3	15.0	104.7		30.3
Change Period (Y+Rc), s		5.0		5.0	3.0	5.0		5.0
Max Green Setting (Gmax), s		109.0		31.0	12.0	94.0		31.0
Max Q Clear Time (g_c+I1), s		2.0		24.4	14.0	2.0		3.9
Green Ext Time (p_c), s		7.9		0.9	0.0	7.9		1.5

Intersection Summary		
HCM 2010 Ctrl Delay		98.7
HCM 2010 LOS		F

Movement	EBL	EBT	EBR	WBL	WBT	WBR	NBL	NBT	NBR	SBL	SBT	SBR
Lane Configurations												
Traffic Volume (veh/h)	56	1324	0	43	1470	190	2	0	33	100	0	59
Future Volume (veh/h)	56	1324	0	43	1470	190	2	0	33	100	0	59
Number	1	6	16	5	2	12	7	4	14	3	8	18
Initial Q (Qb), veh	0	0	0	0	0	0	0	0	0	0	0	0
Ped-Bike Adj(A_pbT)	1.00		1.00	1.00		1.00	1.00		1.00	1.00		1.00
Parking Bus, Adj	1.00	1.00	1.00	1.00	1.00	1.00	1.00	1.00	1.00	1.00	1.00	1.00
Adj Sat Flow, veh/h/ln	1863	1863	1900	1863	1863	1900	1900	1863	1900	1863	1863	1900
Adj Flow Rate, veh/h	60	1409	0	46	1564	202	3	0	46	123	0	73
Adj No. of Lanes	1	2	0	1	2	0	0	1	0	1	1	0
Peak Hour Factor	0.94	0.94	0.94	0.94	0.94	0.94	0.71	0.71	0.71	0.81	0.81	0.81
Percent Heavy Veh, %	2	2	2	2	2	2	2	2	2	2	2	2
Cap, veh/h	252	2764	0	395	2460	313	29	7	155	195	0	165
Arrive On Green	0.06	1.00	0.00	0.03	0.78	0.78	0.10	0.00	0.10	0.10	0.00	0.10
Sat Flow, veh/h	1774	3632	0	1774	3159	402	32	65	1490	1354	0	1583
Grp Volume(v), veh/h	60	1409	0	46	866	900	49	0	0	123	0	73
Grp Sat Flow(s),veh/h/ln	1774	1770	0	1774	1770	1792	1587	0	0	1354	0	1583
Q Serve(g_s), s	1.0	0.0	0.0	0.8	31.8	33.5	0.0	0.0	0.0	8.4	0.0	6.5
Cycle Q Clear(g_c), s	1.0	0.0	0.0	0.8	31.8	33.5	4.3	0.0	0.0	12.6	0.0	6.5
Prop In Lane	1.00		0.00	1.00		0.22	0.06		0.94	1.00		1.00
Lane Grp Cap(c), veh/h	252	2764	0	395	1378	1395	191	0	0	195	0	165
V/C Ratio(X)	0.24	0.51	0.00	0.12	0.63	0.64	0.26	0.00	0.00	0.63	0.00	0.44
Avail Cap(c_a), veh/h	375	2764	0	522	1378	1395	372	0	0	353	0	348
HCM Platoon Ratio	2.00	2.00	2.00	1.00	1.00	1.00	1.00	1.00	1.00	1.00	1.00	1.00
Upstream Filter(I)	0.69	0.69	0.00	1.00	1.00	1.00	1.00	0.00	0.00	1.00	0.00	1.00
Uniform Delay (d), s/veh	7.3	0.0	0.0	2.9	7.2	7.4	62.1	0.0	0.0	65.6	0.0	63.1
Incr Delay (d2), s/veh	0.3	0.5	0.0	0.1	2.2	2.3	0.7	0.0	0.0	3.3	0.0	1.9
Initial Q Delay(d3),s/veh	0.0	0.0	0.0	0.0	0.0	0.0	0.0	0.0	0.0	0.0	0.0	0.0
%ile BackOfQ(50%),veh/ln	0.7	0.2	0.0	0.4	16.2	17.1	1.9	0.0	0.0	5.2	0.0	2.9
LnGrp Delay(d),s/veh	7.7	0.5	0.0	3.0	9.4	9.7	62.8	0.0	0.0	69.0	0.0	65.0
LnGrp LOS	A	A		A	A	A	E			E		E
Approach Vol, veh/h		1469			1812			49			196	
Approach Delay, s/veh		0.8			9.4			62.8			67.5	
Approach LOS		A			A			E			E	

Timer	1	2	3	4	5	6	7	8
Assigned Phs	1	2		4	5	6		8
Phs Duration (G+Y+Rc), s	7.6	121.8		20.6	7.3	122.1		20.6
Change Period (Y+Rc), s	3.0	5.0		5.0	3.0	5.0		5.0
Max Green Setting (Gmax), s	15.0	89.0		33.0	15.0	89.0		33.0
Max Q Clear Time (g_c+I1), s	3.0	35.5		6.3	2.8	2.0		14.6
Green Ext Time (p_c), s	0.1	43.2		1.1	0.1	62.3		1.0

Intersection Summary	
HCM 2010 Ctrl Delay	9.8
HCM 2010 LOS	A

Movement	EBL	EBT	EBR	WBL	WBT	WBR	NBL	NBT	NBR	SBL	SBT	SBR
Lane Configurations												
Traffic Volume (veh/h)	450	870	137	387	1065	86	347	855	295	205	930	291
Future Volume (veh/h)	450	870	137	387	1065	86	347	855	295	205	930	291
Number	3	8	18	7	4	14	1	6	16	5	2	12
Initial Q (Qb), veh	0	0	0	0	0	0	0	0	0	0	0	0
Ped-Bike Adj(A_pbT)	1.00		1.00	1.00		1.00	1.00		1.00	1.00		1.00
Parking Bus, Adj	1.00	1.00	1.00	1.00	1.00	1.00	1.00	1.00	1.00	1.00	1.00	1.00
Adj Sat Flow, veh/h/ln	1863	1863	1900	1863	1863	1900	1863	1863	1900	1863	1863	1900
Adj Flow Rate, veh/h	489	946	149	412	1133	91	361	891	307	214	969	303
Adj No. of Lanes	2	3	0	2	3	0	2	3	0	2	3	0
Peak Hour Factor	0.92	0.92	0.92	0.94	0.94	0.94	0.96	0.96	0.96	0.96	0.96	0.96
Percent Heavy Veh, %	2	2	2	2	2	2	2	2	2	2	2	2
Cap, veh/h	539	1106	174	468	1097	88	393	1478	508	264	1374	429
Arrive On Green	0.16	0.25	0.25	0.14	0.23	0.23	0.11	0.40	0.40	0.08	0.36	0.36
Sat Flow, veh/h	3442	4434	696	3442	4800	385	3442	3742	1285	3442	3842	1199
Grp Volume(v), veh/h	489	723	372	412	800	424	361	807	391	214	855	417
Grp Sat Flow(s),veh/h/ln	1721	1695	1740	1721	1695	1795	1721	1695	1636	1721	1695	1651
Q Serve(g_s), s	19.6	28.5	28.6	16.4	32.0	32.0	14.5	26.5	26.6	8.6	30.3	30.4
Cycle Q Clear(g_c), s	19.6	28.5	28.6	16.4	32.0	32.0	14.5	26.5	26.6	8.6	30.3	30.4
Prop In Lane	1.00		0.40	1.00		0.21	1.00		0.79	1.00		0.73
Lane Grp Cap(c), veh/h	539	845	434	468	775	410	393	1339	646	264	1212	590
V/C Ratio(X)	0.91	0.85	0.86	0.88	1.03	1.03	0.92	0.60	0.60	0.81	0.71	0.71
Avail Cap(c_a), veh/h	590	845	434	590	775	410	393	1339	646	393	1212	590
HCM Platoon Ratio	1.00	1.00	1.00	1.00	1.00	1.00	1.00	1.00	1.00	1.00	1.00	1.00
Upstream Filter(I)	1.00	1.00	1.00	1.00	1.00	1.00	1.00	1.00	1.00	1.00	1.00	1.00
Uniform Delay (d), s/veh	58.0	50.1	50.2	59.4	54.0	54.0	61.3	33.6	33.7	63.6	38.6	38.7
Incr Delay (d2), s/veh	16.5	8.6	15.7	11.5	41.0	53.3	25.6	2.0	4.2	4.5	3.5	7.0
Initial Q Delay(d3),s/veh	0.0	0.0	0.0	0.0	0.0	0.0	0.0	0.0	0.0	0.0	0.0	0.0
%ile BackOfQ(50%),veh/ln	10.5	14.4	15.6	8.6	19.4	21.9	8.3	12.7	12.7	4.2	14.8	15.0
LnGrp Delay(d),s/veh	74.6	58.7	65.9	70.9	95.0	107.3	87.0	35.6	37.8	68.1	42.1	45.6
LnGrp LOS	E	E	E	E	F	F	F	D	D	E	D	D
Approach Vol, veh/h		1584			1636			1559			1486	
Approach Delay, s/veh		65.3			92.1			48.1			46.8	
Approach LOS		E			F			D			D	

Timer	1	2	3	4	5	6	7	8
Assigned Phs	1	2	3	4	5	6	7	8
Phs Duration (G+Y+Rc), s	20.0	56.1	25.9	38.0	14.7	61.3	23.0	40.9
Change Period (Y+Rc), s	4.0	6.0	4.0	6.0	4.0	6.0	4.0	6.0
Max Green Setting (Gmax), s	16.0	48.0	24.0	32.0	16.0	48.0	24.0	32.0
Max Q Clear Time (g_c+I1), s	16.5	32.4	21.6	34.0	10.6	28.6	18.4	30.6
Green Ext Time (p_c), s	0.0	6.2	0.4	0.0	0.2	6.8	0.6	1.3

Intersection Summary	
HCM 2010 Ctrl Delay	63.6
HCM 2010 LOS	E

Movement	EBL	EBT	EBR	WBL	WBT	WBR	NBL	NBT	NBR	SBL	SBT	SBR
Lane Configurations												
Traffic Volume (veh/h)	204	1124	42	0	1177	144	180	73	7	88	29	181
Future Volume (veh/h)	204	1124	42	0	1177	144	180	73	7	88	29	181
Number	1	6	16	5	2	12	7	4	14	3	8	18
Initial Q (Qb), veh	0	0	0	0	0	0	0	0	0	0	0	0
Ped-Bike Adj(A_pbT)	1.00		1.00	1.00		1.00	1.00		1.00	1.00		1.00
Parking Bus, Adj	1.00	1.00	1.00	1.00	1.00	1.00	1.00	1.00	1.00	1.00	1.00	1.00
Adj Sat Flow, veh/h/ln	1863	1863	1900	0	1863	1900	1863	1863	1863	1863	1863	1863
Adj Flow Rate, veh/h	212	1171	44	0	1266	155	207	84	8	96	32	197
Adj No. of Lanes	1	2	0	0	2	0	1	1	1	1	1	1
Peak Hour Factor	0.96	0.96	0.96	0.93	0.93	0.93	0.87	0.87	0.87	0.92	0.92	0.92
Percent Heavy Veh, %	2	2	2	0	2	2	2	2	2	2	2	2
Cap, veh/h	275	2474	93	0	1983	242	187	238	202	99	404	343
Arrive On Green	0.05	0.71	0.71	0.00	0.62	0.62	0.13	0.13	0.13	0.06	0.22	0.22
Sat Flow, veh/h	1774	3479	131	0	3270	387	1147	1863	1583	1774	1863	1583
Grp Volume(v), veh/h	212	595	620	0	703	718	207	84	8	96	32	197
Grp Sat Flow(s),veh/h/ln	1774	1770	1840	0	1770	1794	1147	1863	1583	1774	1863	1583
Q Serve(g_s), s	7.6	26.4	26.4	0.0	44.5	45.1	23.0	7.4	0.8	9.7	2.5	20.0
Cycle Q Clear(g_c), s	7.6	26.4	26.4	0.0	44.5	45.1	23.0	7.4	0.8	9.7	2.5	20.0
Prop In Lane	1.00		0.07	0.00		0.22	1.00		1.00	1.00		1.00
Lane Grp Cap(c), veh/h	275	1258	1308	0	1105	1120	187	238	202	99	404	343
V/C Ratio(X)	0.77	0.47	0.47	0.00	0.64	0.64	1.11	0.35	0.04	0.97	0.08	0.57
Avail Cap(c_a), veh/h	279	1258	1308	0	1105	1120	187	238	202	99	404	343
HCM Platoon Ratio	1.00	1.00	1.00	1.00	1.00	1.00	1.00	1.00	1.00	1.00	1.00	1.00
Upstream Filter(I)	1.00	1.00	1.00	0.00	1.00	1.00	1.00	1.00	1.00	1.00	1.00	1.00
Uniform Delay (d), s/veh	24.0	11.3	11.3	0.0	21.1	21.2	81.0	71.7	68.8	84.9	56.2	63.1
Incr Delay (d2), s/veh	11.1	1.3	1.2	0.0	2.8	2.8	98.3	4.1	0.4	81.7	0.4	6.8
Initial Q Delay(d3),s/veh	0.0	0.0	0.0	0.0	0.0	0.0	0.0	0.0	0.0	0.0	0.0	0.0
%ile BackOfQ(50%),veh/ln	7.1	13.2	13.7	0.0	22.5	23.2	14.4	4.1	0.4	7.0	1.3	9.4
LnGrp Delay(d),s/veh	35.1	12.6	12.6	0.0	23.9	24.0	179.3	75.8	69.2	166.5	56.6	69.9
LnGrp LOS	D	B	B		C	C	F	E	E	F	E	E
Approach Vol, veh/h		1427			1421			299			325	
Approach Delay, s/veh		15.9			23.9			147.3			97.1	
Approach LOS		B			C			F			F	

Timer	1	2	3	4	5	6	7	8
Assigned Phs	1	2	3	4		6		8
Phs Duration (G+Y+Rc), s	15.6	118.4	16.0	30.0		134.0		46.0
Change Period (Y+Rc), s	6.0	6.0	6.0	7.0		6.0		7.0
Max Green Setting (Gmax), s	10.0	112.0	10.0	23.0		128.0		39.0
Max Q Clear Time (g_c+I1), s	9.6	47.1	11.7	25.0		28.4		22.0
Green Ext Time (p_c), s	0.0	7.2	0.0	0.0		7.3		1.6

Intersection Summary	
HCM 2010 Ctrl Delay	38.1
HCM 2010 LOS	D

Movement	EBL	EBT	EBR	WBL	WBT	WBR	NBL	NBT	NBR	SBL	SBT	SBR
Lane Configurations												
Traffic Volume (veh/h)	424	559	181	269	513	324	570	1596	301	345	1031	244
Future Volume (veh/h)	424	559	181	269	513	324	570	1596	301	345	1031	244
Number	3	8	18	7	4	14	1	6	16	5	2	12
Initial Q (Qb), veh	0	0	0	0	0	0	0	0	0	0	0	0
Ped-Bike Adj(A_pbT)	1.00		1.00	1.00		1.00	1.00		1.00	1.00		1.00
Parking Bus, Adj	1.00	1.00	1.00	1.00	1.00	1.00	1.00	1.00	1.00	1.00	1.00	1.00
Adj Sat Flow, veh/h/ln	1863	1863	1863	1863	1863	1863	1863	1863	1900	1863	1863	1900
Adj Flow Rate, veh/h	456	601	195	280	534	338	613	1716	324	371	1109	262
Adj No. of Lanes	2	3	1	2	3	1	2	3	0	2	3	0
Peak Hour Factor	0.93	0.93	0.93	0.96	0.96	0.96	0.93	0.93	0.93	0.93	0.93	0.93
Percent Heavy Veh, %	2	2	2	2	2	2	2	2	2	2	2	2
Cap, veh/h	482	1139	624	313	890	466	585	1963	367	410	1665	393
Arrive On Green	0.14	0.22	0.22	0.09	0.17	0.17	0.17	0.46	0.46	0.12	0.41	0.41
Sat Flow, veh/h	3442	5085	1583	3442	5085	1583	3442	4306	805	3442	4111	971
Grp Volume(v), veh/h	456	601	195	280	534	338	613	1348	692	371	915	456
Grp Sat Flow(s),veh/h/ln	1721	1695	1583	1721	1695	1583	1721	1695	1721	1721	1695	1691
Q Serve(g_s), s	26.3	20.8	17.0	16.1	19.4	35.0	34.0	71.8	73.3	21.3	44.0	44.0
Cycle Q Clear(g_c), s	26.3	20.8	17.0	16.1	19.4	35.0	34.0	71.8	73.3	21.3	44.0	44.0
Prop In Lane	1.00		1.00	1.00		1.00	1.00		0.47	1.00		0.57
Lane Grp Cap(c), veh/h	482	1139	624	313	890	466	585	1546	785	410	1373	685
V/C Ratio(X)	0.95	0.53	0.31	0.89	0.60	0.73	1.05	0.87	0.88	0.91	0.67	0.67
Avail Cap(c_a), veh/h	482	1139	624	344	890	466	585	1546	785	585	1373	685
HCM Platoon Ratio	1.00	1.00	1.00	1.00	1.00	1.00	1.00	1.00	1.00	1.00	1.00	1.00
Upstream Filter(I)	1.00	1.00	1.00	1.00	1.00	1.00	1.00	1.00	1.00	1.00	1.00	1.00
Uniform Delay (d), s/veh	85.3	68.3	41.9	89.9	76.0	63.4	83.0	49.1	49.5	87.0	48.5	48.5
Incr Delay (d2), s/veh	27.7	0.4	0.2	21.8	1.0	5.3	50.3	7.1	13.7	10.9	2.6	5.1
Initial Q Delay(d3),s/veh	0.0	0.0	0.0	0.0	0.0	0.0	0.0	0.0	0.0	0.0	0.0	0.0
%ile BackOfQ(50%),veh/ln	14.4	9.8	7.5	8.6	9.2	17.5	20.3	35.2	37.8	10.8	21.1	21.5
LnGrp Delay(d),s/veh	112.9	68.7	42.1	111.7	77.0	68.7	133.3	56.2	63.2	97.9	51.1	53.6
LnGrp LOS	F	E	D	F	E	E	F	E	E	F	D	D
Approach Vol, veh/h		1252			1152			2653			1742	
Approach Delay, s/veh		80.7			83.0			75.8			61.7	
Approach LOS		F			F			E			E	

Timer	1	2	3	4	5	6	7	8
Assigned Phs	1	2	3	4	5	6	7	8
Phs Duration (G+Y+Rc), s	39.0	87.0	33.0	41.0	28.8	97.2	23.2	50.8
Change Period (Y+Rc), s	5.0	6.0	5.0	6.0	5.0	6.0	5.0	6.0
Max Green Setting (Gmax), s	34.0	81.0	28.0	35.0	34.0	81.0	20.0	43.0
Max Q Clear Time (g_c+I1), s	36.0	46.0	28.3	37.0	23.3	75.3	18.1	22.8
Green Ext Time (p_c), s	0.0	12.1	0.0	0.0	0.5	4.3	0.1	7.8

Intersection Summary	
HCM 2010 Ctrl Delay	74.3
HCM 2010 LOS	E

Intersection	
Int Delay, s/veh	2.3

Movement	EBL	EBT	WBT	WBR	SBL	SBR
Lane Configurations						
Traffic Vol, veh/h	0	0	2075	19	0	92
Future Vol, veh/h	0	0	2075	19	0	92
Conflicting Peds, #/hr	0	0	0	0	0	0
Sign Control	Free	Free	Free	Free	Stop	Stop
RT Channelized	-	None	-	None	-	None
Storage Length	100	-	-	50	0	-
Veh in Median Storage, #	-	0	0	-	0	-
Grade, %	-	0	0	-	0	-
Peak Hour Factor	92	92	92	92	92	92
Heavy Vehicles, %	2	2	2	2	2	2
Mvmt Flow	0	0	2255	21	0	100

Major/Minor	Major1		Major2		Minor2	
Conflicting Flow All	2276	0	-	0	2266	1138
Stage 1	-	-	-	-	2266	-
Stage 2	-	-	-	-	0	-
Critical Hdwy	5.34	-	-	-	6.29	7.14
Critical Hdwy Stg 1	-	-	-	-	6.64	-
Critical Hdwy Stg 2	-	-	-	-	5.84	-
Follow-up Hdwy	3.12	-	-	-	3.67	3.92
Pot Cap-1 Maneuver	90	-	-	-	48	168
Stage 1	-	-	-	-	39	-
Stage 2	-	-	-	-	-	-
Platoon blocked, %		-	-	-		
Mov Cap-1 Maneuver	90	-	-	-	48	168
Mov Cap-2 Maneuver	-	-	-	-	48	-
Stage 1	-	-	-	-	39	-
Stage 2	-	-	-	-	-	-

Approach	EB	WB	SB
HCM Control Delay, s	0	0	53.8
HCM LOS			F

Minor Lane/Major Mvmt	EBL	EBT	WBT	WBR	SBLn1
Capacity (veh/h)	90	-	-	-	168
HCM Lane V/C Ratio	-	-	-	-	0.595
HCM Control Delay (s)	0	-	-	-	53.8
HCM Lane LOS	A	-	-	-	F
HCM 95th %tile Q(veh)	0	-	-	-	3.2

Intersection	
Int Delay, s/veh	22.2

Movement	EBT	EBR	WBL	WBT	NBL	NBR
Lane Configurations						
Traffic Vol, veh/h	712	0	0	1969	114	56
Future Vol, veh/h	712	0	0	1969	114	56
Conflicting Peds, #/hr	0	0	0	0	0	0
Sign Control	Free	Free	Free	Free	Stop	Stop
RT Channelized	-	None	-	None	-	None
Storage Length	-	-	-	-	0	50
Veh in Median Storage, #	0	-	-	0	0	-
Grade, %	0	-	-	0	0	-
Peak Hour Factor	92	92	92	92	92	92
Heavy Vehicles, %	2	2	2	2	2	2
Mvmt Flow	774	0	0	2140	124	61

Major/Minor	Major1		Major2		Minor1	
Conflicting Flow All	0	-	-	-	1844	387
Stage 1	-	-	-	-	774	-
Stage 2	-	-	-	-	1070	-
Critical Hdwy	-	-	-	-	6.84	6.94
Critical Hdwy Stg 1	-	-	-	-	5.84	-
Critical Hdwy Stg 2	-	-	-	-	5.84	-
Follow-up Hdwy	-	-	-	-	3.52	3.32
Pot Cap-1 Maneuver	-	0	0	-	~ 66	611
Stage 1	-	0	0	-	415	-
Stage 2	-	0	0	-	291	-
Platoon blocked, %	-			-		
Mov Cap-1 Maneuver	-	-	-	-	~ 66	611
Mov Cap-2 Maneuver	-	-	-	-	~ 66	-
Stage 1	-	-	-	-	415	-
Stage 2	-	-	-	-	291	-

Approach	EB	WB	NB
HCM Control Delay, s	0	0	$ 371.7
HCM LOS			F

Minor Lane/Major Mvmt	NBLn1	NBLn2	EBT	WBT
Capacity (veh/h)	66	611	-	-
HCM Lane V/C Ratio	1.877	0.1	-	-
HCM Control Delay (s)	$ 548.6	11.5	-	-
HCM Lane LOS	F	B	-	-
HCM 95th %tile Q(veh)	11.3	0.3	-	-

Notes			
~: Volume exceeds capacity	$: Delay exceeds 300s	+: Computation Not Defined	*: All major volume in platoon

Intersection	
Int Delay, s/veh	0.1

Movement	EBL	EBT	WBT	WBR	SBL	SBR
Lane Configurations						
Traffic Vol, veh/h	0	767	1956	2	0	13
Future Vol, veh/h	0	767	1956	2	0	13
Conflicting Peds, #/hr	0	0	0	0	0	0
Sign Control	Free	Free	Free	Free	Stop	Stop
RT Channelized	-	None	-	None	-	None
Storage Length	-	-	-	-	-	0
Veh in Median Storage, #	-	0	0	-	0	-
Grade, %	-	0	0	-	0	-
Peak Hour Factor	92	92	92	92	92	92
Heavy Vehicles, %	2	2	2	2	2	2
Mvmt Flow	0	834	2126	2	0	14

Major/Minor	Major1		Major2		Minor2	
Conflicting Flow All	-	0	-	0	-	1064
Stage 1	-	-	-	-	-	-
Stage 2	-	-	-	-	-	-
Critical Hdwy	-	-	-	-	-	6.94
Critical Hdwy Stg 1	-	-	-	-	-	-
Critical Hdwy Stg 2	-	-	-	-	-	-
Follow-up Hdwy	-	-	-	-	-	3.32
Pot Cap-1 Maneuver	0	-	-	-	0	219
Stage 1	0	-	-	-	0	-
Stage 2	0	-	-	-	0	-
Platoon blocked, %		-	-	-		
Mov Cap-1 Maneuver	-	-	-	-	-	219
Mov Cap-2 Maneuver	-	-	-	-	-	-
Stage 1	-	-	-	-	-	-
Stage 2	-	-	-	-	-	-

Approach	EB	WB	SB
HCM Control Delay, s	0	0	22.6
HCM LOS			C

Minor Lane/Major Mvmt	EBT	WBT	WBR	SBLn1
Capacity (veh/h)	-	-	-	219
HCM Lane V/C Ratio	-	-	-	0.065
HCM Control Delay (s)	-	-	-	22.6
HCM Lane LOS	-	-	-	C
HCM 95th %tile Q(veh)	-	-	-	0.2

Intersection	
Int Delay, s/veh	13.1

Movement	EBL	EBT	WBT	WBR	SBL	SBR
Lane Configurations						
Traffic Vol, veh/h	35	991	1855	6	9	152
Future Vol, veh/h	35	991	1855	6	9	152
Conflicting Peds, #/hr	0	0	0	0	0	0
Sign Control	Free	Free	Free	Free	Stop	Stop
RT Channelized	-	None	-	None	-	None
Storage Length	100	-	-	-	0	-
Veh in Median Storage, #	-	0	0	-	0	-
Grade, %	-	0	0	-	0	-
Peak Hour Factor	92	92	92	92	92	92
Heavy Vehicles, %	2	2	2	2	2	2
Mvmt Flow	38	1077	2016	7	10	165

Major/Minor	Major1		Major2		Minor2	
Conflicting Flow All	2023	0	-	0	2635	1011
Stage 1	-	-	-	-	2020	-
Stage 2	-	-	-	-	615	-
Critical Hdwy	4.14	-	-	-	6.84	6.94
Critical Hdwy Stg 1	-	-	-	-	5.84	-
Critical Hdwy Stg 2	-	-	-	-	5.84	-
Follow-up Hdwy	2.22	-	-	-	3.52	3.32
Pot Cap-1 Maneuver	277	-	-	-	19	237
Stage 1	-	-	-	-	89	-
Stage 2	-	-	-	-	502	-
Platoon blocked, %		-	-	-		
Mov Cap-1 Maneuver	277	-	-	-	16	237
Mov Cap-2 Maneuver	-	-	-	-	16	-
Stage 1	-	-	-	-	89	-
Stage 2	-	-	-	-	433	-

Approach	EB	WB	SB
HCM Control Delay, s	0.7	0	244
HCM LOS			F

Minor Lane/Major Mvmt	EBL	EBT	WBT	WBR	SBLn1
Capacity (veh/h)	277	-	-	-	134
HCM Lane V/C Ratio	0.137	-	-	-	1.306
HCM Control Delay (s)	20.1	-	-	-	244
HCM Lane LOS	C	-	-	-	F
HCM 95th %tile Q(veh)	0.5	-	-	-	11.1

Intersection	
Int Delay, s/veh	4

Movement	EBL	EBT	EBR	WBL	WBT	WBR	NBL	NBT	NBR	SBL	SBT	SBR
Lane Configurations												
Traffic Vol, veh/h	21	1430	412	148	1001	19	2	0	154	0	0	31
Future Vol, veh/h	21	1430	412	148	1001	19	2	0	154	0	0	31
Conflicting Peds, #/hr	0	0	0	0	0	0	0	0	0	0	0	0
Sign Control	Free	Free	Free	Free	Free	Free	Stop	Stop	Stop	Stop	Stop	Stop
RT Channelized	-	-	None	-	-	None	-	-	None	-	-	None
Storage Length	-	-	-	300	-	-	-	-	0	-	-	0
Veh in Median Storage, #	-	0	-	-	0	-	-	0	-	-	0	-
Grade, %	-	0	-	-	0	-	-	0	-	-	0	-
Peak Hour Factor	92	92	92	92	92	92	92	92	92	92	92	92
Heavy Vehicles, %	2	2	2	2	2	2	2	2	2	2	2	2
Mvmt Flow	23	1554	448	161	1088	21	2	0	167	0	0	34

Major/Minor	Major1			Major2			Minor1			Minor2		
Conflicting Flow All	1109	0	0	2002	0	0	2690	-	1001	-	-	554
Stage 1	-	-	-	-	-	-	1824	-	-	-	-	-
Stage 2	-	-	-	-	-	-	866	-	-	-	-	-
Critical Hdwy	4.14	-	-	4.14	-	-	7.54	-	6.94	-	-	6.94
Critical Hdwy Stg 1	-	-	-	-	-	-	6.54	-	-	-	-	-
Critical Hdwy Stg 2	-	-	-	-	-	-	6.54	-	-	-	-	-
Follow-up Hdwy	2.22	-	-	2.22	-	-	3.52	-	3.32	-	-	3.32
Pot Cap-1 Maneuver	625	-	-	282	-	-	10	0	241	0	0	476
Stage 1	-	-	-	-	-	-	80	0	-	0	0	-
Stage 2	-	-	-	-	-	-	314	0	-	0	0	-
Platoon blocked, %		-	-		-	-						
Mov Cap-1 Maneuver	625	-	-	282	-	-	5	-	241	-	-	476
Mov Cap-2 Maneuver	-	-	-	-	-	-	5	-	-	-	-	-
Stage 1	-	-	-	-	-	-	77	-	-	-	-	-
Stage 2	-	-	-	-	-	-	125	-	-	-	-	-

Approach	EB	WB	NB	SB
HCM Control Delay, s	0.1	4.2	48.1	13.1
HCM LOS			E	B

Minor Lane/Major Mvmt	NBLn1	EBL	EBT	EBR	WBL	WBT	WBR	SBLn1
Capacity (veh/h)	241	625	-	-	282	-	-	476
HCM Lane V/C Ratio	0.695	0.037	-	-	0.57	-	-	0.071
HCM Control Delay (s)	48.1	11	-	-	33.4	-	-	13.1
HCM Lane LOS	E	B	-	-	D	-	-	B
HCM 95th %tile Q(veh)	4.6	0.1	-	-	3.3	-	-	0.2

Intersection	
Int Delay, s/veh	1.8

Movement	EBT	EBR	WBL	WBT	NBL	NBR
Lane Configurations						
Traffic Vol, veh/h	1540	42	23	1152	16	16
Future Vol, veh/h	1540	42	23	1152	16	16
Conflicting Peds, #/hr	0	0	0	0	0	0
Sign Control	Free	Free	Free	Free	Stop	Stop
RT Channelized	-	None	-	None	-	None
Storage Length	-	-	200	-	0	0
Veh in Median Storage, #	0	-	-	0	0	-
Grade, %	0	-	-	0	0	-
Peak Hour Factor	92	92	92	92	92	92
Heavy Vehicles, %	2	2	2	2	2	2
Mvmt Flow	1674	46	25	1252	17	17

Major/Minor	Major1		Major2		Minor1	
Conflicting Flow All	0	0	1720	0	2373	860
Stage 1	-	-	-	-	1697	-
Stage 2	-	-	-	-	676	-
Critical Hdwy	-	-	4.14	-	6.84	6.94
Critical Hdwy Stg 1	-	-	-	-	5.84	-
Critical Hdwy Stg 2	-	-	-	-	5.84	-
Follow-up Hdwy	-	-	2.22	-	3.52	3.32
Pot Cap-1 Maneuver	-	-	364	-	29	299
Stage 1	-	-	-	-	134	-
Stage 2	-	-	-	-	467	-
Platoon blocked, %	-	-		-		
Mov Cap-1 Maneuver	-	-	364	-	27	299
Mov Cap-2 Maneuver	-	-	-	-	27	-
Stage 1	-	-	-	-	134	-
Stage 2	-	-	-	-	435	-

Approach	EB	WB	NB
HCM Control Delay, s	0	0.3	144.1
HCM LOS			F

Minor Lane/Major Mvmt	NBLn1	NBLn2	EBT	EBR	WBL	WBT
Capacity (veh/h)	27	299	-	-	364	-
HCM Lane V/C Ratio	0.644	0.058	-	-	0.069	-
HCM Control Delay (s)	270.5	17.8	-	-	15.6	-
HCM Lane LOS	F	C	-	-	C	-
HCM 95th %tile Q(veh)	2	0.2	-	-	0.2	-

Intersection	
Int Delay, s/veh	0.7

Movement	EBL	EBT	WBT	WBR	SBL	SBR
Lane Configurations						
Traffic Vol, veh/h	0	0	951	43	0	47
Future Vol, veh/h	0	0	951	43	0	47
Conflicting Peds, #/hr	0	0	0	0	0	0
Sign Control	Free	Free	Free	Free	Stop	Stop
RT Channelized	-	None	-	None	-	None
Storage Length	100	-	-	50	0	-
Veh in Median Storage, #	-	0	0	-	0	-
Grade, %	-	0	0	-	0	-
Peak Hour Factor	92	92	92	92	92	92
Heavy Vehicles, %	2	2	2	2	2	2
Mvmt Flow	0	0	1034	47	0	51

Major/Minor	Major1		Major2		Minor2	
Conflicting Flow All	1080	0	-	0	1057	540
Stage 1	-	-	-	-	1057	-
Stage 2	-	-	-	-	0	-
Critical Hdwy	5.34	-	-	-	6.29	7.14
Critical Hdwy Stg 1	-	-	-	-	6.64	-
Critical Hdwy Stg 2	-	-	-	-	5.84	-
Follow-up Hdwy	3.12	-	-	-	3.67	3.92
Pot Cap-1 Maneuver	358	-	-	-	253	416
Stage 1	-	-	-	-	228	-
Stage 2	-	-	-	-	-	-
Platoon blocked, %		-	-	-		
Mov Cap-1 Maneuver	358	-	-	-	253	416
Mov Cap-2 Maneuver	-	-	-	-	253	-
Stage 1	-	-	-	-	228	-
Stage 2	-	-	-	-	-	-

Approach	EB	WB	SB
HCM Control Delay, s	0	0	14.9
HCM LOS			B

Minor Lane/Major Mvmt	EBL	EBT	WBT	WBR	SBLn1
Capacity (veh/h)	358	-	-	-	416
HCM Lane V/C Ratio	-	-	-	-	0.123
HCM Control Delay (s)	0	-	-	-	14.9
HCM Lane LOS	A	-	-	-	B
HCM 95th %tile Q(veh)	0	-	-	-	0.4

Intersection	
Int Delay, s/veh	2.1

Movement	EBT	EBR	WBL	WBT	NBL	NBR
Lane Configurations						
Traffic Vol, veh/h	1684	0	0	974	20	14
Future Vol, veh/h	1684	0	0	974	20	14
Conflicting Peds, #/hr	0	0	0	0	0	0
Sign Control	Free	Free	Free	Free	Stop	Stop
RT Channelized	-	None	-	None	-	None
Storage Length	-	-	-	-	0	50
Veh in Median Storage, #	0	-	-	0	0	-
Grade, %	0	-	-	0	0	-
Peak Hour Factor	92	92	92	92	92	92
Heavy Vehicles, %	2	2	2	2	2	2
Mvmt Flow	1830	0	0	1059	22	15

Major/Minor	Major1		Major2		Minor1	
Conflicting Flow All	0	-	-	-	2359	915
Stage 1	-	-	-	-	1830	-
Stage 2	-	-	-	-	529	-
Critical Hdwy	-	-	-	-	6.84	6.94
Critical Hdwy Stg 1	-	-	-	-	5.84	-
Critical Hdwy Stg 2	-	-	-	-	5.84	-
Follow-up Hdwy	-	-	-	-	3.52	3.32
Pot Cap-1 Maneuver	-	0	0	-	30	275
Stage 1	-	0	0	-	113	-
Stage 2	-	0	0	-	555	-
Platoon blocked, %	-			-		
Mov Cap-1 Maneuver	-	-	-	-	30	275
Mov Cap-2 Maneuver	-	-	-	-	30	-
Stage 1	-	-	-	-	113	-
Stage 2	-	-	-	-	555	-

Approach	EB	WB	NB
HCM Control Delay, s	0	0	166.8
HCM LOS			F

Minor Lane/Major Mvmt	NBLn1	NBLn2	EBT	WBT
Capacity (veh/h)	30	275	-	-
HCM Lane V/C Ratio	0.725	0.055	-	-
HCM Control Delay (s)	270.3	18.9	-	-
HCM Lane LOS	F	C	-	-
HCM 95th %tile Q(veh)	2.4	0.2	-	-

Intersection	
Int Delay, s/veh	0

Movement	EBL	EBT	WBT	WBR	SBL	SBR
Lane Configurations						
Traffic Vol, veh/h	0	1698	974	23	0	3
Future Vol, veh/h	0	1698	974	23	0	3
Conflicting Peds, #/hr	0	0	0	0	0	0
Sign Control	Free	Free	Free	Free	Stop	Stop
RT Channelized	-	None	-	None	-	None
Storage Length	-	-	-	-	-	0
Veh in Median Storage, #	-	0	0	-	0	-
Grade, %	-	0	0	-	0	-
Peak Hour Factor	92	92	92	92	92	92
Heavy Vehicles, %	2	2	2	2	2	2
Mvmt Flow	0	1846	1059	25	0	3

Major/Minor	Major1		Major2		Minor2	
Conflicting Flow All	-	0	-	0	-	542
Stage 1	-	-	-	-	-	-
Stage 2	-	-	-	-	-	-
Critical Hdwy	-	-	-	-	-	6.94
Critical Hdwy Stg 1	-	-	-	-	-	-
Critical Hdwy Stg 2	-	-	-	-	-	-
Follow-up Hdwy	-	-	-	-	-	3.32
Pot Cap-1 Maneuver	0	-	-	-	0	485
Stage 1	0	-	-	-	0	-
Stage 2	0	-	-	-	0	-
Platoon blocked, %		-	-	-		
Mov Cap-1 Maneuver	-	-	-	-	-	485
Mov Cap-2 Maneuver	-	-	-	-	-	-
Stage 1	-	-	-	-	-	-
Stage 2	-	-	-	-	-	-

Approach	EB	WB	SB
HCM Control Delay, s	0	0	12.5
HCM LOS			B

Minor Lane/Major Mvmt	EBT	WBT	WBR	SBLn1
Capacity (veh/h)	-	-	-	485
HCM Lane V/C Ratio	-	-	-	0.007
HCM Control Delay (s)	-	-	-	12.5
HCM Lane LOS	-	-	-	B
HCM 95th %tile Q(veh)	-	-	-	0

Intersection	
Int Delay, s/veh	1.6

Movement	EBL	EBT	WBT	WBR	SBL	SBR
Lane Configurations						
Traffic Vol, veh/h	95	1529	1213	15	8	44
Future Vol, veh/h	95	1529	1213	15	8	44
Conflicting Peds, #/hr	0	0	0	0	0	0
Sign Control	Free	Free	Free	Free	Stop	Stop
RT Channelized	-	None	-	None	-	None
Storage Length	100	-	-	-	0	-
Veh in Median Storage, #	-	0	0	-	0	-
Grade, %	-	0	0	-	0	-
Peak Hour Factor	92	92	92	92	92	92
Heavy Vehicles, %	2	2	2	2	2	2
Mvmt Flow	103	1662	1318	16	9	48

Major/Minor	Major1		Major2		Minor2	
Conflicting Flow All	1335	0	-	0	2365	667
Stage 1	-	-	-	-	1327	-
Stage 2	-	-	-	-	1038	-
Critical Hdwy	4.14	-	-	-	6.84	6.94
Critical Hdwy Stg 1	-	-	-	-	5.84	-
Critical Hdwy Stg 2	-	-	-	-	5.84	-
Follow-up Hdwy	2.22	-	-	-	3.52	3.32
Pot Cap-1 Maneuver	513	-	-	-	29	401
Stage 1	-	-	-	-	212	-
Stage 2	-	-	-	-	302	-
Platoon blocked, %		-	-	-		
Mov Cap-1 Maneuver	513	-	-	-	23	401
Mov Cap-2 Maneuver	-	-	-	-	23	-
Stage 1	-	-	-	-	212	-
Stage 2	-	-	-	-	241	-

Approach	EB	WB	SB
HCM Control Delay, s	0.8	0	64.3
HCM LOS			F

Minor Lane/Major Mvmt	EBL	EBT	WBT	WBR	SBLn1
Capacity (veh/h)	513	-	-	-	114
HCM Lane V/C Ratio	0.201	-	-	-	0.496
HCM Control Delay (s)	13.8	-	-	-	64.3
HCM Lane LOS	B	-	-	-	F
HCM 95th %tile Q(veh)	0.7	-	-	-	2.2

Intersection	
Int Delay, s/veh	1.8

Movement	EBL	EBT	EBR	WBL	WBT	WBR	NBL	NBT	NBR	SBL	SBT	SBR
Lane Configurations												
Traffic Vol, veh/h	17	1000	202	63	1258	28	0	0	152	4	0	63
Future Vol, veh/h	17	1000	202	63	1258	28	0	0	152	4	0	63
Conflicting Peds, #/hr	0	0	0	0	0	0	0	0	0	0	0	0
Sign Control	Free	Free	Free	Free	Free	Free	Stop	Stop	Stop	Stop	Stop	Stop
RT Channelized	-	-	None	-	-	None	-	-	None	-	-	None
Storage Length	-	-	-	300	-	-	-	-	0	-	-	0
Veh in Median Storage, #	-	0	-	-	0	-	-	0	-	-	0	-
Grade, %	-	0	-	-	0	-	-	0	-	-	0	-
Peak Hour Factor	92	92	92	92	92	92	92	92	92	92	92	92
Heavy Vehicles, %	2	2	2	2	2	2	2	2	2	2	2	2
Mvmt Flow	18	1087	220	68	1367	30	0	0	165	4	0	68

Major/Minor	Major1			Major2			Minor1			Minor2		
Conflicting Flow All	1398	0	0	1307	0	0	-	-	653	2100	-	699
Stage 1	-	-	-	-	-	-	-	-	-	1520	-	-
Stage 2	-	-	-	-	-	-	-	-	-	580	-	-
Critical Hdwy	4.14	-	-	4.14	-	-	-	-	6.94	7.54	-	6.94
Critical Hdwy Stg 1	-	-	-	-	-	-	-	-	-	6.54	-	-
Critical Hdwy Stg 2	-	-	-	-	-	-	-	-	-	6.54	-	-
Follow-up Hdwy	2.22	-	-	2.22	-	-	-	-	3.32	3.52	-	3.32
Pot Cap-1 Maneuver	485	-	-	525	-	-	0	0	410	30	0	382
Stage 1	-	-	-	-	-	-	0	0	-	124	0	-
Stage 2	-	-	-	-	-	-	0	0	-	467	0	-
Platoon blocked, %		-	-		-	-						
Mov Cap-1 Maneuver	485	-	-	525	-	-	-	-	410	16	-	382
Mov Cap-2 Maneuver	-	-	-	-	-	-	-	-	-	16	-	-
Stage 1	-	-	-	-	-	-	-	-	-	119	-	-
Stage 2	-	-	-	-	-	-	-	-	-	268	-	-

Approach	EB	WB	NB	SB
HCM Control Delay, s	0.2	0.6	19.6	16.5
HCM LOS			C	C

Minor Lane/Major Mvmt	NBLn1	EBL	EBT	EBR	WBL	WBT	WBR	SBLn1
Capacity (veh/h)	410	485	-	-	525	-	-	382
HCM Lane V/C Ratio	0.403	0.038	-	-	0.13	-	-	0.179
HCM Control Delay (s)	19.6	12.7	-	-	12.9	-	-	16.5
HCM Lane LOS	C	B	-	-	B	-	-	C
HCM 95th %tile Q(veh)	1.9	0.1	-	-	0.4	-	-	0.6

Intersection	
Int Delay, s/veh	33.2

Movement	EBT	EBR	WBL	WBT	NBL	NBR
Lane Configurations						
Traffic Vol, veh/h	1044	110	75	1252	97	120
Future Vol, veh/h	1044	110	75	1252	97	120
Conflicting Peds, #/hr	0	0	0	0	0	0
Sign Control	Free	Free	Free	Free	Stop	Stop
RT Channelized	-	None	-	None	-	None
Storage Length	-	-	200	-	0	0
Veh in Median Storage, #	0	-	-	0	0	-
Grade, %	0	-	-	0	0	-
Peak Hour Factor	92	92	92	92	92	92
Heavy Vehicles, %	2	2	2	2	2	2
Mvmt Flow	1135	120	82	1361	105	130

Major/Minor	Major1		Major2		Minor1	
Conflicting Flow All	0	0	1254	0	2038	627
Stage 1	-	-	-	-	1195	-
Stage 2	-	-	-	-	843	-
Critical Hdwy	-	-	4.14	-	6.84	6.94
Critical Hdwy Stg 1	-	-	-	-	5.84	-
Critical Hdwy Stg 2	-	-	-	-	5.84	-
Follow-up Hdwy	-	-	2.22	-	3.52	3.32
Pot Cap-1 Maneuver	-	-	551	-	~ 49	426
Stage 1	-	-	-	-	250	-
Stage 2	-	-	-	-	382	-
Platoon blocked, %	-	-		-		
Mov Cap-1 Maneuver	-	-	551	-	~ 42	426
Mov Cap-2 Maneuver	-	-	-	-	~ 42	-
Stage 1	-	-	-	-	250	-
Stage 2	-	-	-	-	325	-

Approach	EB	WB	NB
HCM Control Delay, s	0	0.7	$ 407.9
HCM LOS			F

Minor Lane/Major Mvmt	NBLn1	NBLn2	EBT	EBR	WBL	WBT
Capacity (veh/h)	42	426	-	-	551	-
HCM Lane V/C Ratio	2.51	0.306	-	-	0.148	-
HCM Control Delay (s)	$ 891.3	17.1	-	-	12.7	-
HCM Lane LOS	F	C	-	-	B	-
HCM 95th %tile Q(veh)	11.4	1.3	-	-	0.5	-

Notes			
~: Volume exceeds capacity	$: Delay exceeds 300s	+: Computation Not Defined	*: All major volume in platoon

APPENDIX E

Transit Routes

Route 54

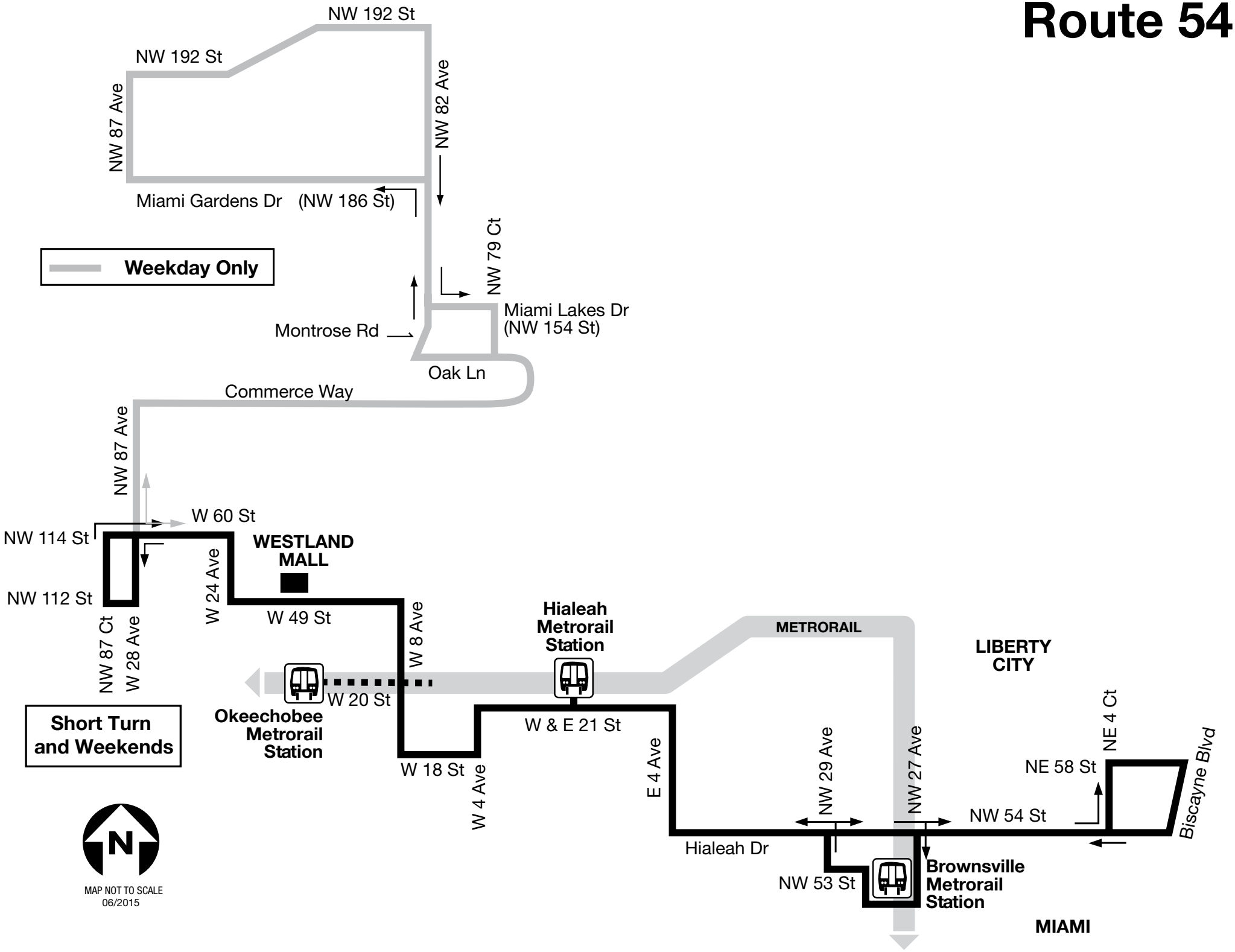
NW 192 St
NW 192 St
NW 87 Ave
NW 82 Ave
Miami Gardens Dr (NW 186 St)
Weekday Only
NW 79 Ct
Miami Lakes Dr
(NW 154 St)
Montrose Rd
Oak Ln
Commerce Way
NW 87 Ave
W 60 St
NW 114 St
WESTLAND MALL
NW 112 St
W 24 Ave
W 49 St
W 8 Ave
NW 87 Ct
W 28 Ave
Hialeah Metrorail Station
METRORAIL
LIBERTY CITY
Short Turn and Weekends
W 20 St
Okeechobee Metrorail Station
W & E 21 St
W 18 St
W 4 Ave
E 4 Ave
NW 29 Ave
NW 27 Ave
NE 4 Ct
NE 58 St
NW 54 St
Biscayne Blvd
Hialeah Dr
NW 53 St
Brownsville Metrorail Station
MIAMI
N
MAP NOT TO SCALE
06/2015

Route 73

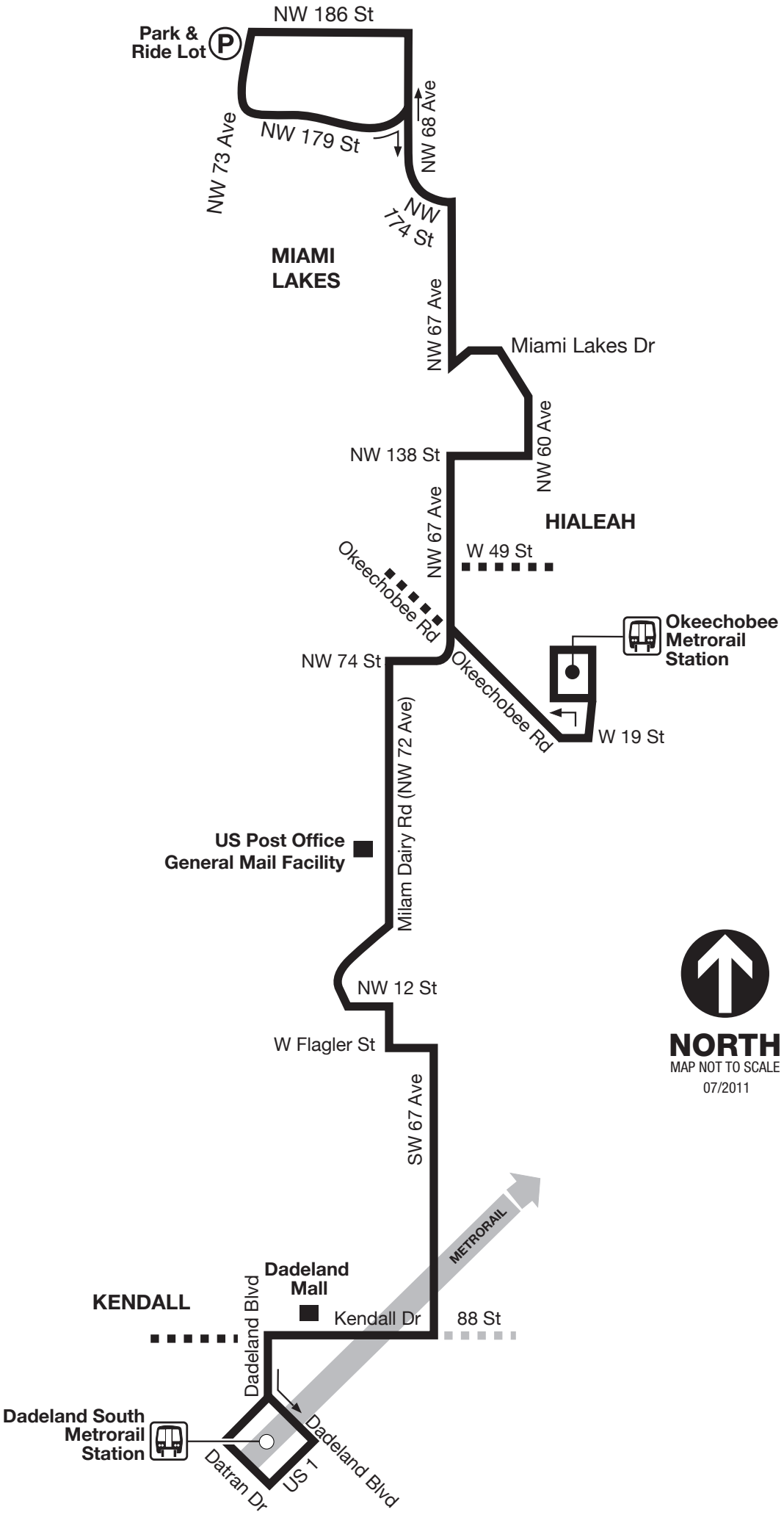
NW 186 St
Park & Ride Lot
NW 73 Ave
NW 179 St
NW 68 Ave
NW 174 St
MIAMI LAKES
NW 67 Ave
Miami Lakes Dr
NW 60 Ave
NW 138 St
HIALEAH
NW 67 Ave
W 49 St
Okeechobee Rd
Okeechobee Metrorail Station
NW 74 St
Okeechobee Rd
W 19 St
Milam Dairy Rd (NW 72 Ave)
US Post Office General Mail Facility
NW 12 St
W Flagler St
SW 67 Ave
NORTH
MAP NOT TO SCALE
07/2011
METRORAIL
Dadeland Mall
KENDALL
Dadeland Blvd
Kendall Dr
88 St
Dadeland South Metrorail Station
Datran Dr
US 1
Dadeland Blvd

95 EXPRESS GOLDEN GLADES

Express Fare

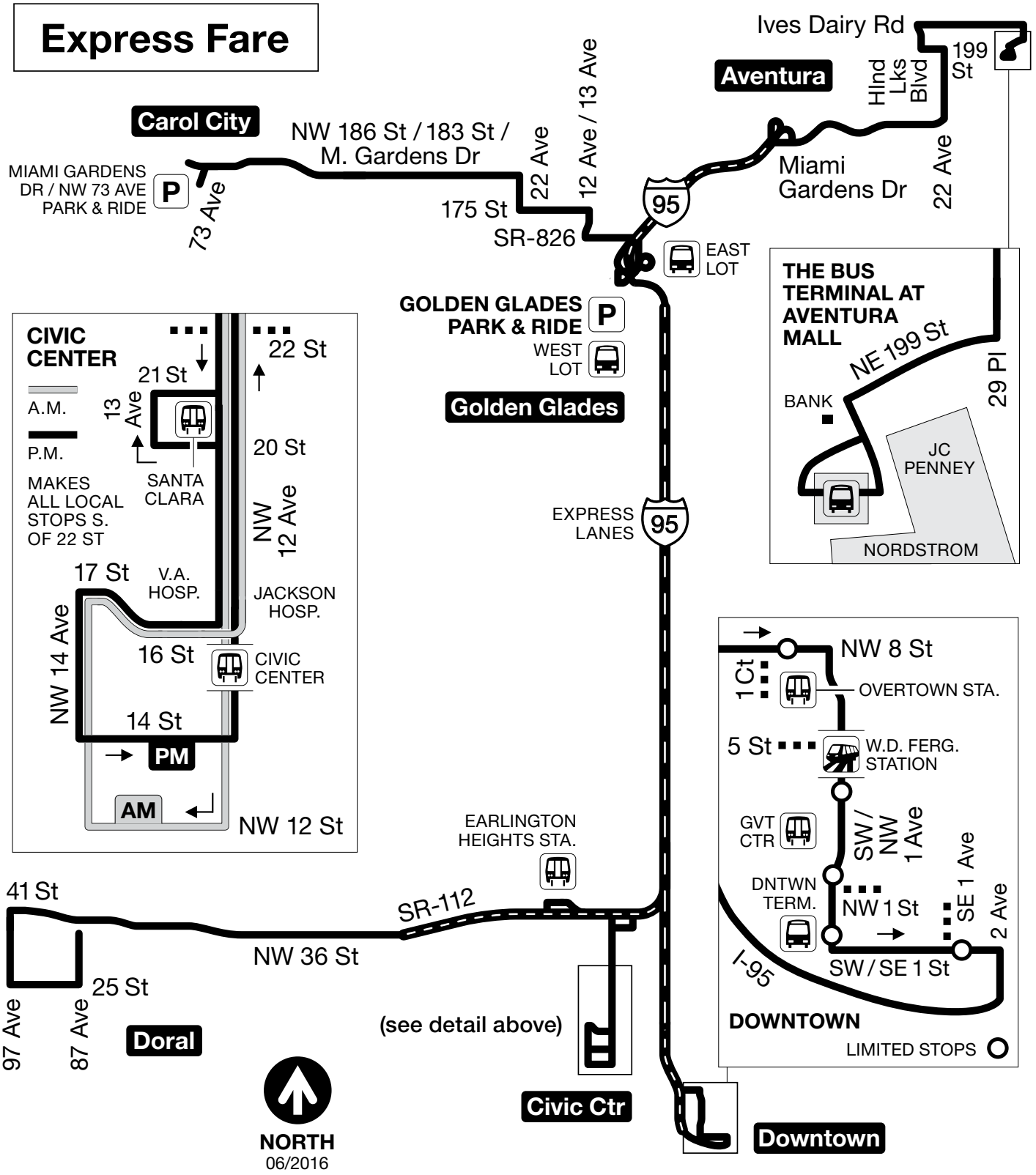

Route 99

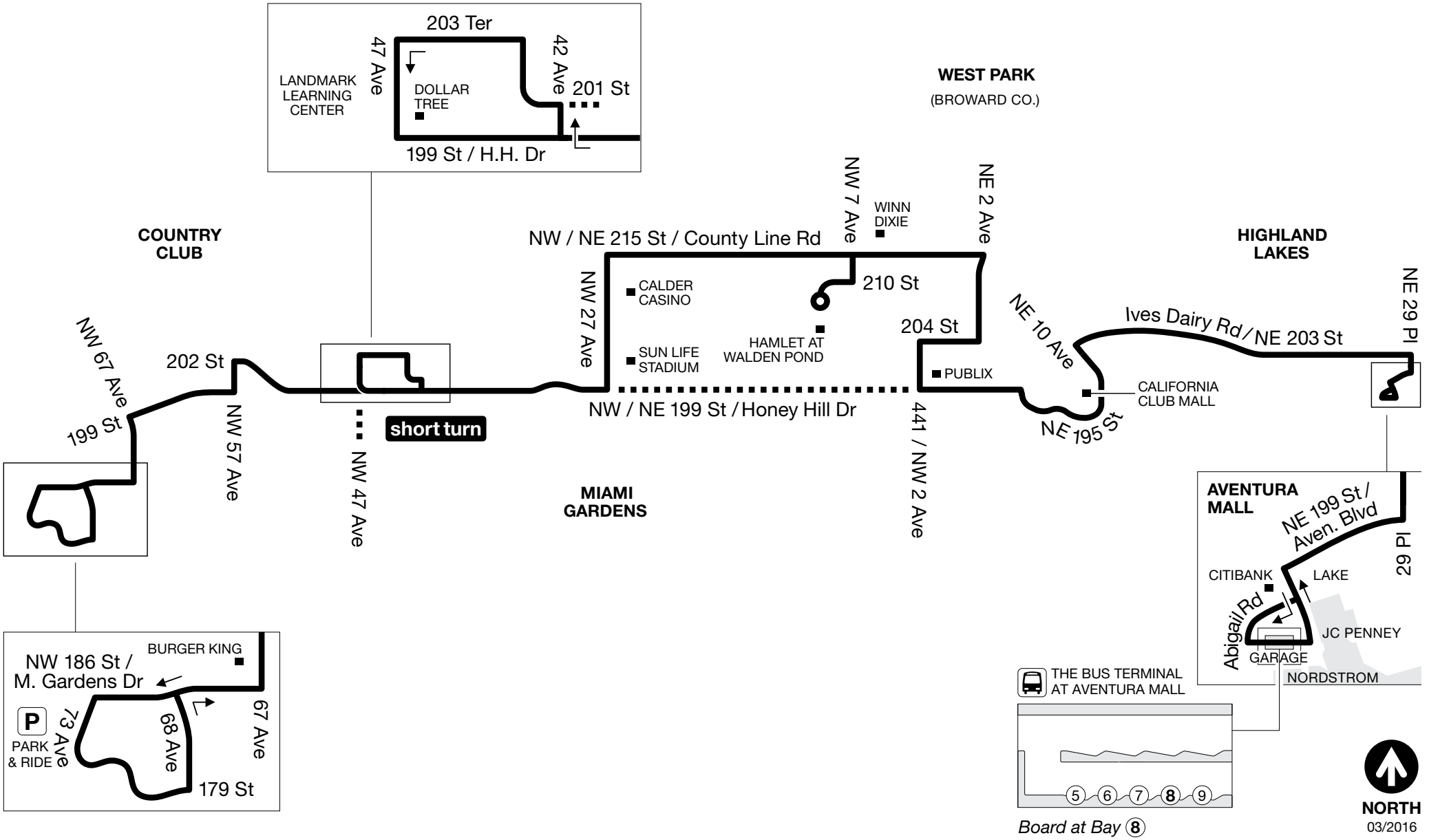
203 Ter
47 Ave
42 Ave
201 St
LANDMARK LEARNING CENTER
DOLLAR TREE
199 St / H.H. Dr
WEST PARK
(BROWARD CO.)
COUNTRY CLUB
NW / NE 215 St / County Line Rd
NW 7 Ave
WINN DIXIE
NE 2 Ave
HIGHLAND LAKES
NW 27 Ave
CALDER CASINO
210 St
NE 29 Pl
NW 67 Ave
202 St
SUN LIFE STADIUM
HAMLET AT WALDEN POND
204 St
NE 10 Ave
Ives Dairy Rd / NE 203 St
PUBLIX
CALIFORNIA CLUB MALL
199 St
NW 57 Ave
short turn
NW / NE 199 St / Honey Hill Dr
NE 195 St
NW 47 Ave
MIAMI GARDENS
441 / NW 2 Ave
AVENTURA MALL
NE 199 St / Aven. Blvd
NE 29 Pl
CITIBANK
LAKE
Abigail Rd
JC PENNEY
GARAGE
NORDSTROM
BURGER KING
NW 186 St / M. Gardens Dr
P
PARK & RIDE
73 Ave
68 Ave
67 Ave
179 St
THE BUS TERMINAL AT AVENTURA MALL
5 6 7 8 9
Board at Bay 8
NORTH
03/2016

Route 183

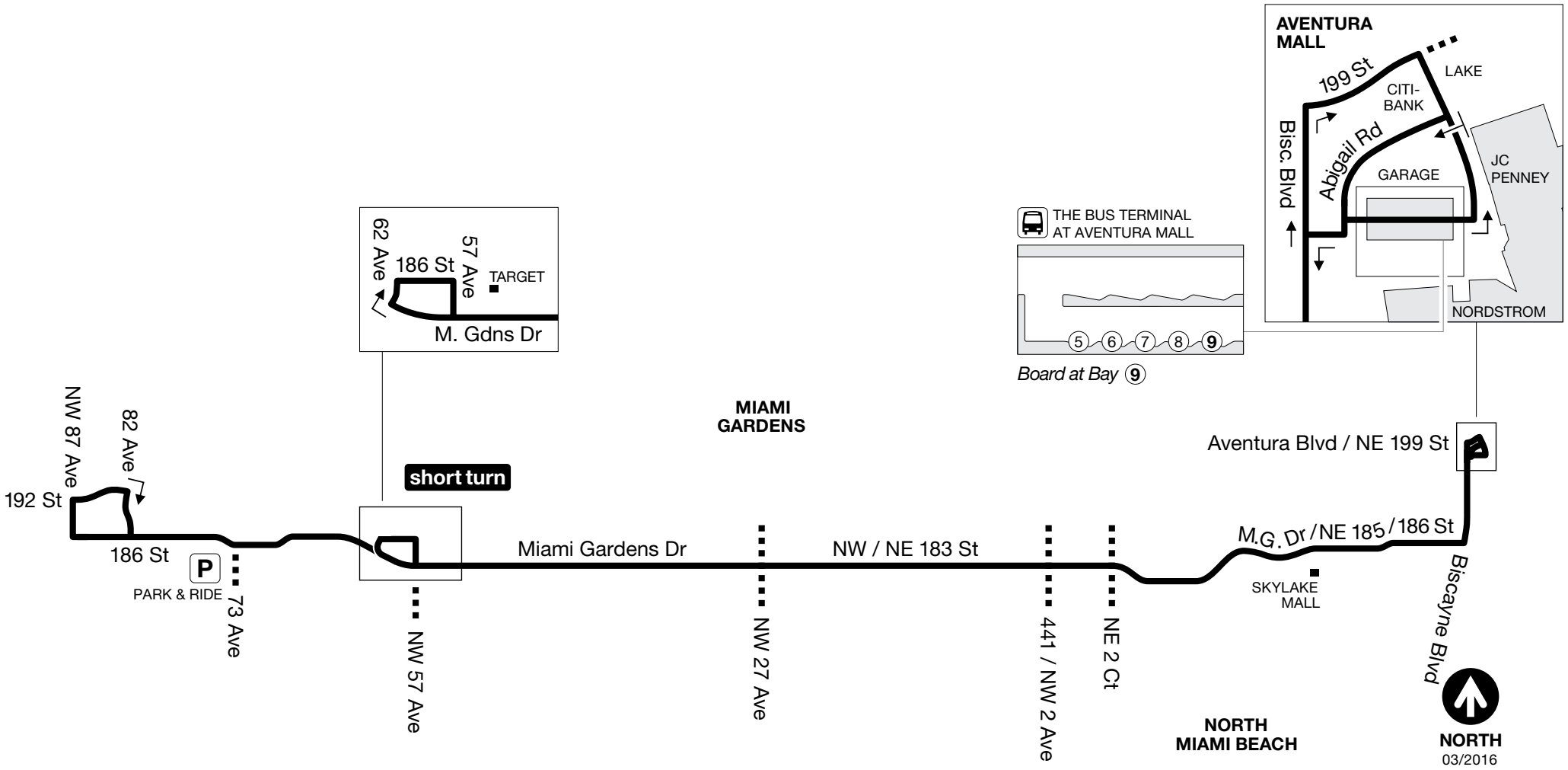
AVENTURA MALL
199 St
LAKE
CITI-BANK
Bisc. Blvd
Abigail Rd
GARAGE
JC PENNEY
NORDSTROM
THE BUS TERMINAL AT AVENTURA MALL
5 6 7 8 9
Board at Bay 9
62 Ave
186 St
57 Ave
TARGET
M. Gdns Dr
NW 87 Ave
82 Ave
192 St
186 St
P
PARK & REDE
73 Ave
short turn
NW 57 Ave
MIAMI GARDENS
Miami Gardens Dr
NW 27 Ave
NW / NE 183 St
441 / NW 2 Ave
NE 2 Ct
Aventura Blvd / NE 199 St
M.G. Dr / NE 185 / 186 St
SKYLAKE MALL
Biscayne Blvd
NORTH MIAMI BEACH
NORTH
03/2016

Route 267
Ludlam Limited

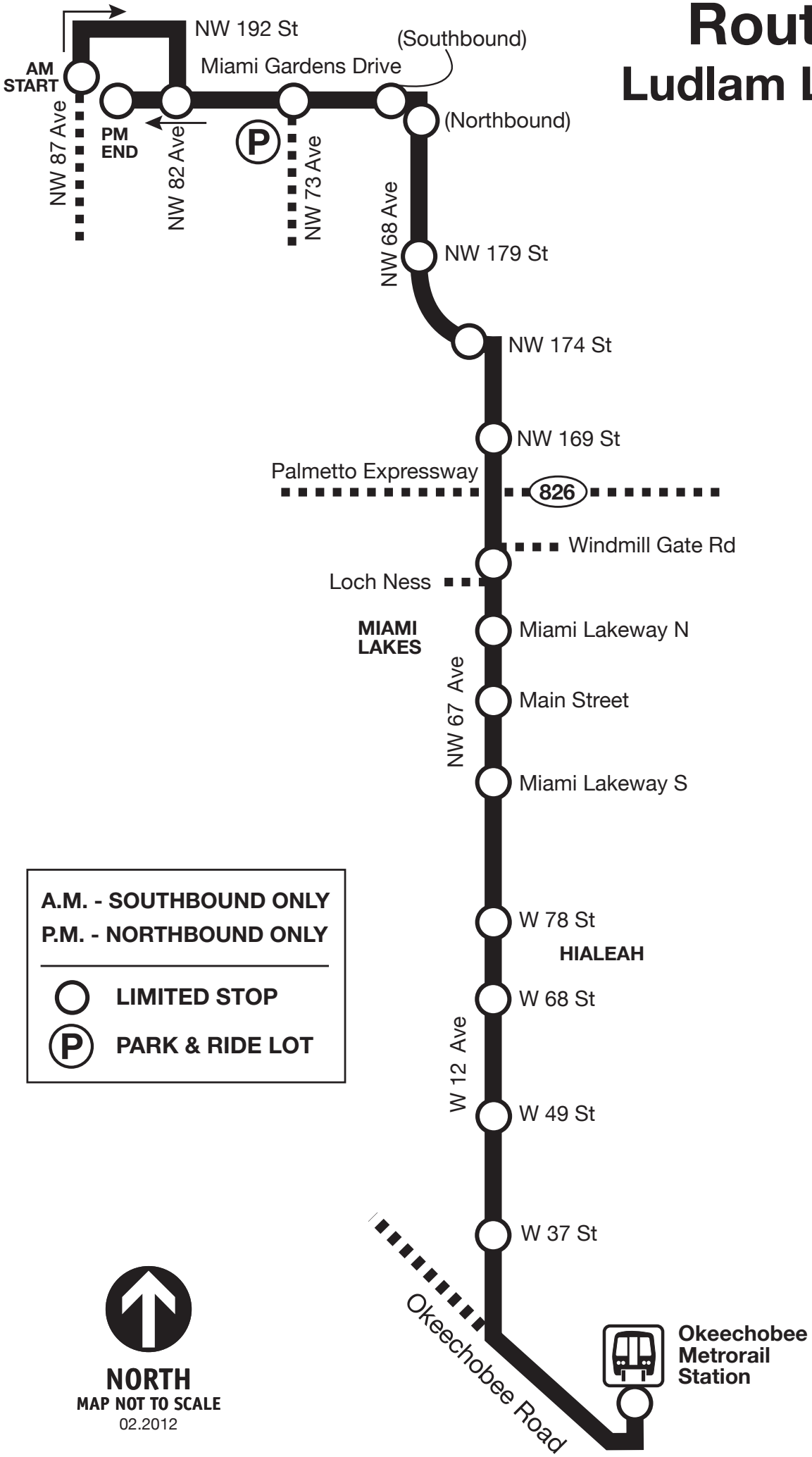

Route 286

North Pointe Circulator

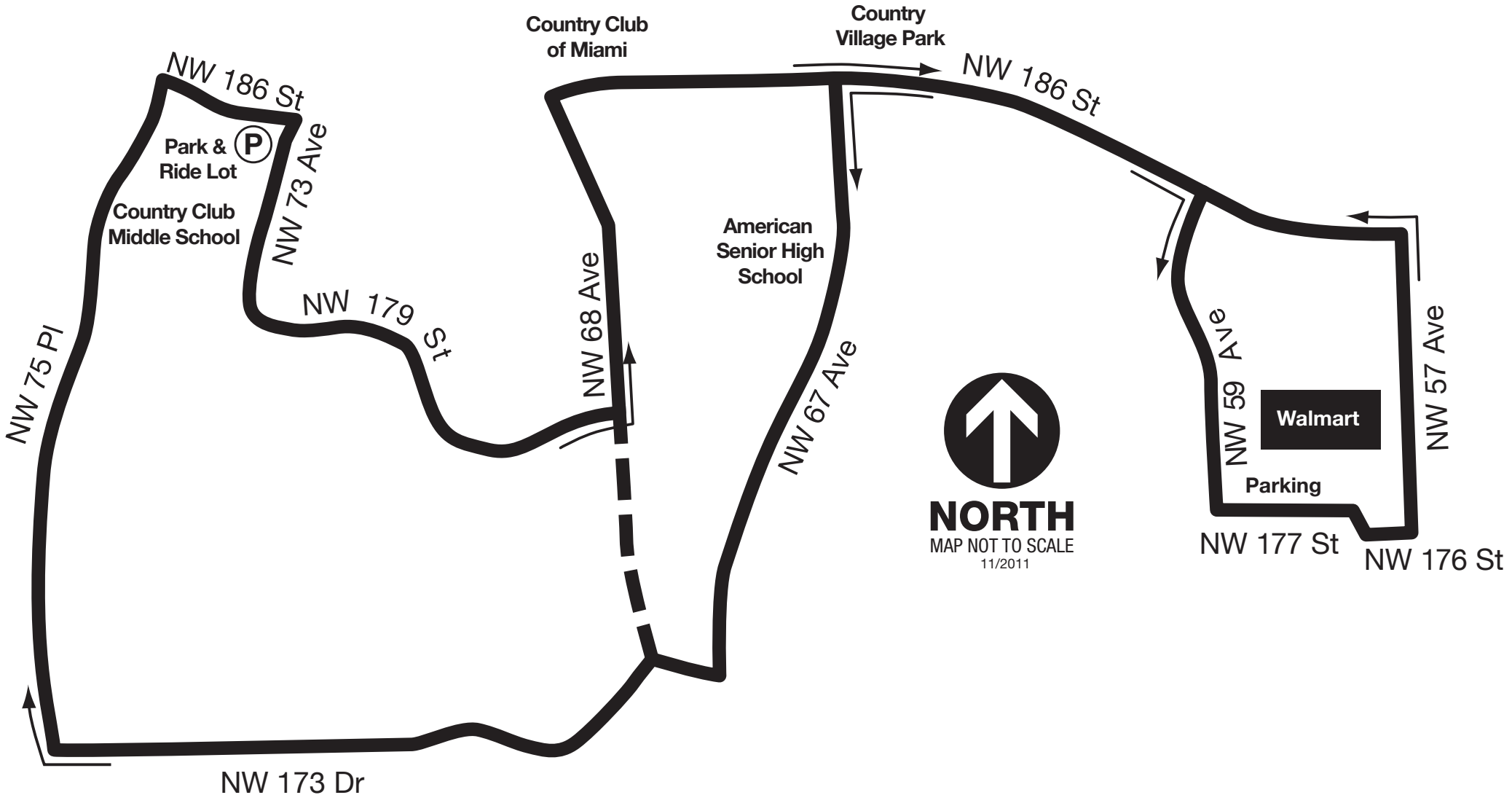

APPENDIX C

MGD Typical Sections

- Existing/No Build
- Build Alternative

MIAMI GARDENS DRIVE
R/W VARIES (105-FT. TO 290-FT)

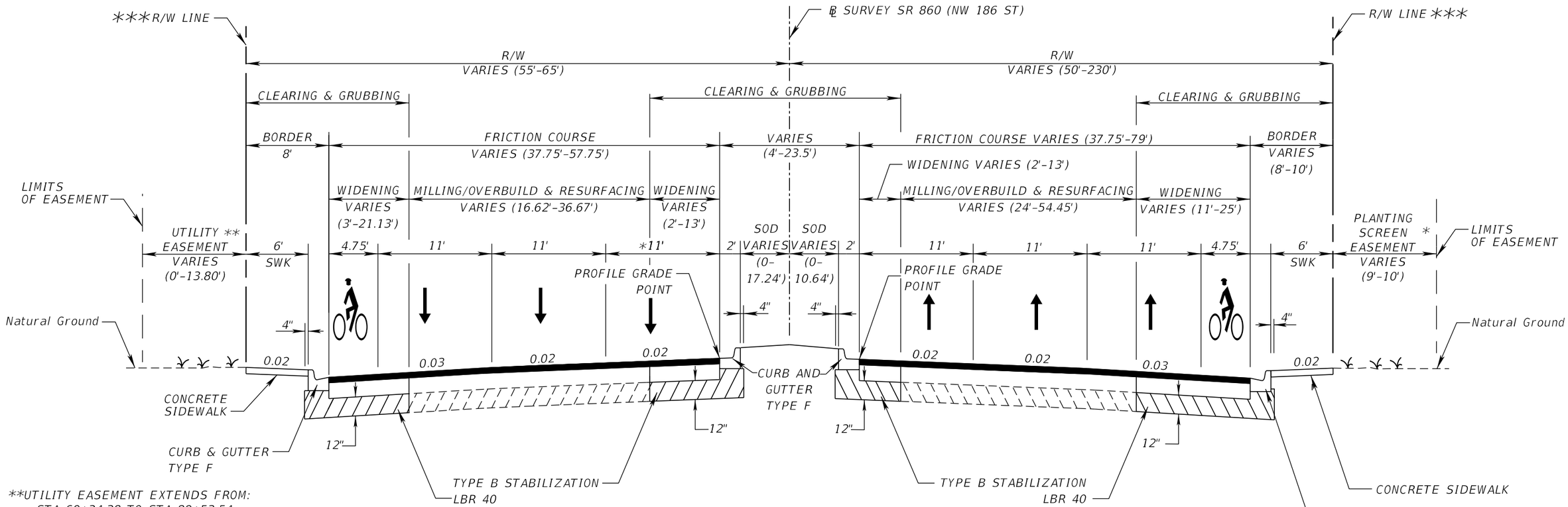

**UTILITY EASEMENT EXTENDS FROM:
-STA 69+34.38 TO STA 89+53.54
-STA 101+11.15 TO STA 118+30.00
-STA 121+22.51 TO STA 122+72.77

10 FT LEFT TURN LANE
(EASTBOUND) ADDITION AT:
-STA. 88+11.84
-STA. 111+60.13

TYPICAL SECTION

SR 860 (MIAMI GARDENS DRIVE)

STA. 69+34.38 TO STA. 127+35.17 (WESTBOUND) (420' WEST OF CANAL)

STA. 66+22.50 TO STA. 127+35.17 (EASTBOUND) (420' WEST OF CANAL)

*PLANTING EASEMENT EXTENDS FROM:
-STA 79+28.92 TO STA 127+35.17

10 FT LEFT TURN LANE
ADDITION (WESTBOUND) AT:
-STA. 71+43.60
-STA. 98+76.98
-STA. 115+65.59

***ADDITIONAL R/W NEEDS RELATED TO NOISE BARRIERS TO BE DETERMINED DURING FINAL DESIGN

TRAFFIC DATA

CURRENT YEAR = 2018 AADT = 40500
ESTIMATED OPENING YEAR = 2020 AADT = 47000
ESTIMATED DESIGN YEAR = 2040 AADT = 58000
K = 9% D = 54.3% T = 3.2% (24 HOUR)
DESIGN HOUR T = 1.5%
DESIGN SPEED = 45 MPH
POSTED SPEED = 45 MPH

REVISIONS			
DATE	DESCRIPTION	DATE	DESCRIPTION

RS&H, Inc.
6303 Blue Lagoon Drive - Suite 325
Miami, Florida 33126
305-428-3200
FL Cert. No. EB0005620
Samuel Gonzalez, P.E. No. 49513

STATE OF FLORIDA
DEPARTMENT OF TRANSPORTATION

ROAD NO.	COUNTY	FINANCIAL PROJECT ID
860	MIAMI-DADE	438864-1-22-01

TYPICAL SECTION (1)

SHEET NO.

MedinaL 10/1/2019 7:16:53 PM X:\p\43886412201_MGD_REEV\roadway\TYPSRD01.dgn

MIAMI GARDENS DRIVE
R/W VARIES (110-FT. TO 115-FT)

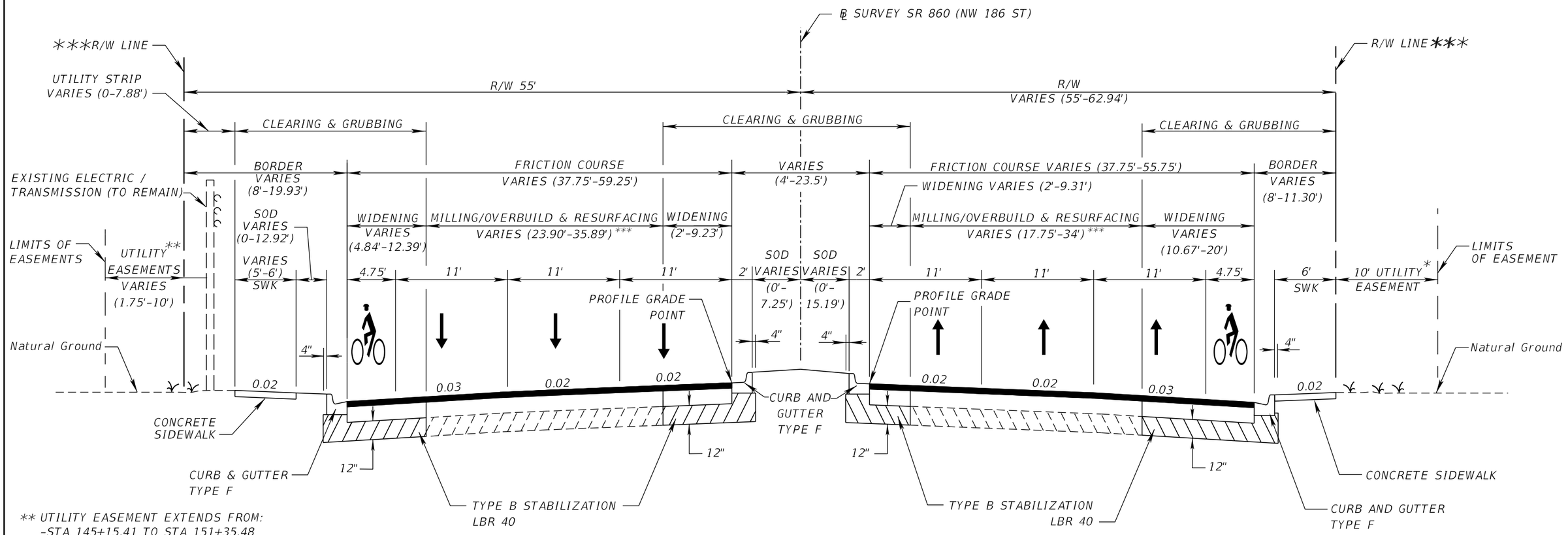

** UTILITY EASEMENT EXTENDS FROM:
-STA 145+15.41 TO STA 151+35.48
-STA 154+51.88 TO STA 167+93.68

*** DUE TO THE SUPERELEVATION THE FOLLOWING STATIONS RANGE WILL REQUIRED TOTAL RECONSTRUCTION
STA. 140+76.16 TO 149+35.70 (WESTBOUND)
STA. 147+54.48 TO 156+13.89 (EASTBOUND)
STA. 166+12.90 TO 175+29.06 (EASTBOUND)
STA. 173+01.06 TO 181+00.04 (WESTBOUND)

TYPICAL SECTION

SR 860 (MIAMI GARDENS DRIVE)

STA. 127+35.17 (420' WEST OF CANAL) TO STA. 185+06.94 (BOB-O-LINK DRIVE)

* UTILITY EASEMENT EXTENDS FROM:
-STA 132+93.60 TO STA 151+35.66

10 FT LEFT TURN LANE (EASTBOUND) ADDITION AT:
-STA. 136+82.17
-STA. 142+86.68
-STA. 144+19.76
-STA. 163+51.29
-STA. 170+51.32
-STA. 181+80.34

10 FT LEFT TURN LANE (WESTBOUND) ADDITION AT:
-STA. 136+82.17
-STA. 151+41.09
-STA. 162+80.33
-STA. 170+96.13
-STA. 181+72.40

***ADDITIONAL R/W NEEDS RELATED TO NOISE BARRIERS TO BE DETERMINED DURING FINAL DESIGN

TRAFFIC DATA

CURRENT YEAR = 2018 AADT = 40500
ESTIMATED OPENING YEAR = 2020 AADT = 47000
ESTIMATED DESIGN YEAR = 2040 AADT = 58000
K = 9% D = 54.3% T = 3.2% (24 HOUR)
DESIGN HOUR T = 1.5%
DESIGN SPEED = 45 MPH
POSTED SPEED = 45 MPH

REVISIONS			
DATE	DESCRIPTION	DATE	DESCRIPTION

RS&H, Inc.
6303 Blue Lagoon Drive - Suite 325
Miami, Florida 33126
305-428-3200
FL Cert. No. EB0005620
Samuel Gonzalez, P.E. No. 49513

STATE OF FLORIDA
DEPARTMENT OF TRANSPORTATION

ROAD NO.	COUNTY	FINANCIAL PROJECT ID
860	MIAMI-DADE	438864-1-22-01

TYPICAL SECTION (2)

SHEET NO.

MIAMI GARDENS DRIVE
R/W VARIES (110-FT. TO 129.75-FT)

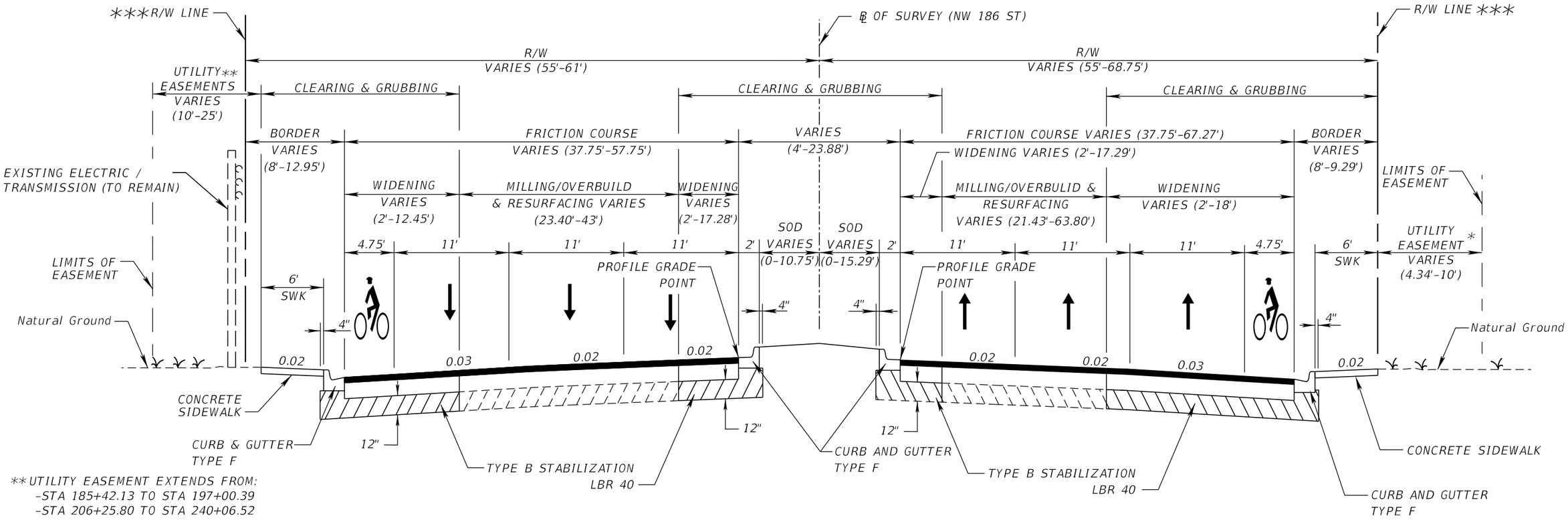

**UTILITY EASEMENT EXTENDS FROM:
-STA 185+42.13 TO STA 197+00.39
-STA 206+25.80 TO STA 240+06.52

10 FT LEFT TURN LANE
(EASTBOUND) ADDITION AT:
-STA. 189+23.71
-STA. 201+99.72
-STA. 206+53.36
-STA. 210+89.95
-STA. 230+05.66
-STA. 233+89.65

TYPICAL SECTION
SR 860 (MIAMI GARDENS DRIVE)
STA. 185+06.94 TO STA. 243+12.45

*UTILITY EASEMENT EXTENDS FROM:
-STA 185+44.47 TO STA 193+27.18
-STA 196+68.95 TO STA 233+65.56
-STA 237+00.98 TO STA 239+78.56

10 FT LEFT TURN LANE
(WESTBOUND) ADDITION AT:
-STA. 188+20.12
-STA. 215+68.09
-STA. 222+34.47
-STA. 233+79.76

***ADDITIONAL R/W NEEDS RELATED TO NOISE BARRIERS TO BE DETERMINED DURING FINAL DESIGN

TRAFFIC DATA

CURRENT YEAR = 2018 AADT = 40500
ESTIMATED OPENING YEAR = 2020 AADT = 47000
ESTIMATED DESIGN YEAR = 2040 AADT = 58000
K = 9% D = 54.3% T = 3.2% (24 HOUR)
DESIGN HOUR T = 1.5%
DESIGN SPEED = 45 MPH
POSTED SPEED = 45 MPH

REVISIONS			
DATE	DESCRIPTION	DATE	DESCRIPTION

RS&H, Inc.
6303 Blue Lagoon Drive - Suite 325
Miami, Florida 33126
305-428-3200
FL Cert. No. EB0005620
Samuel Gonzalez, P.E. No. 49513

STATE OF FLORIDA
DEPARTMENT OF TRANSPORTATION

ROAD NO.	COUNTY	FINANCIAL PROJECT ID
860	MIAMI-DADE	438864-1-22-01

TYPICAL SECTION (3)

SHEET NO.

MedinaL 10/1/2019 7:16:54 PM X:\p\43886412201_MGD_REEV\roadway\TYPSRD01.dgn

APPENDIX D

Existing Transit Facilities and Operating Characteristics

Route 54

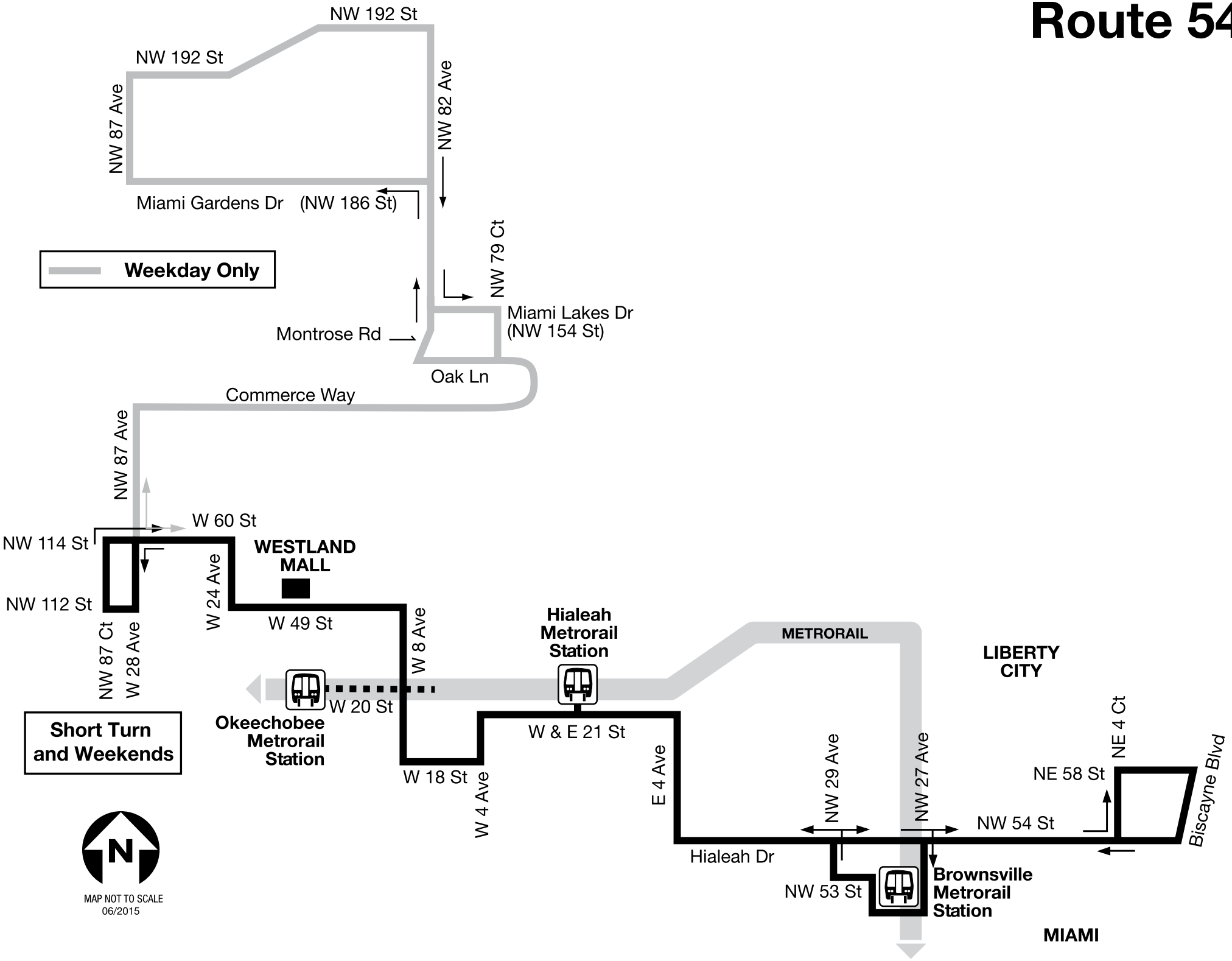
NW 192 St
NW 192 St
NW 87 Ave
NW 82 Ave
Miami Gardens Dr (NW 186 St)
Weekday Only
NW 79 Ct
Miami Lakes Dr
(NW 154 St)
Montrose Rd
Oak Ln
Commerce Way
NW 87 Ave
W 60 St
NW 114 St
WESTLAND
MALL
NW 112 St
W 24 Ave
W 49 St
W 8 Ave
NW 87 Ct
W 28 Ave
Hialeah
Metrorail
Station
METRORAIL
LIBERTY
CITY
Short Turn
and Weekends
W 20 St
Okeechobee
Metrorail
Station
W & E 21 St
W 18 St
W 4 Ave
E 4 Ave
NW 29 Ave
NW 27 Ave
NE 4 Ct
NE 58 St
NW 54 St
Biscayne Blvd
Hialeah Dr
NW 53 St
Brownsville
Metrorail
Station
MIAMI
N
MAP NOT TO SCALE
06/2015

Employees Calendar Translate

Hurricane season runs through Nov. 30. Check out the **Hurricane Guide** to make sure you're ready for the next storm.

Menu Login

Bus Routes Schedule

54 (Eastbound) WEEKDAY

NW 186 ST & 84 AV	NW 82 AV & 154 ST	NW 87 CT & 114 ST	W 24 AV & 60 ST HIALEAH	W 49 ST & 17 CT HIALEAH	W 8 AV & 29 ST HIALEAH	HIALEAH METRORAIL STATION	HIALEAH DR & E 4 AV	NW 54 ST & 32 AV	BROWNSVILLE METRORAIL STATION	NW 54 ST & 12 AV	NE 4 CT & 57 ST
-	-	04:52AM	04:54AM	05:00AM	05:08AM	05:16AM	05:22AM	05:27AM	05:30AM	05:37AM	05:47AM
-	-	05:26AM	05:28AM	05:34AM	05:42AM	05:50AM	05:56AM	06:02AM	06:06AM	06:17AM	06:29AM
05:37AM	05:42AM	-	05:51AM	06:00AM	06:10AM	06:20AM	06:28AM	06:34AM	06:38AM	06:49AM	07:04AM
-	-	06:16AM	06:18AM	06:27AM	06:37AM	06:47AM	06:55AM	07:01AM	07:05AM	07:16AM	07:31AM
06:37AM	06:47AM	-	07:01AM	07:12AM	07:25AM	07:36AM	07:46AM	07:52AM	07:56AM	08:07AM	08:22AM
-	-	06:38AM	06:40AM	06:49AM	06:59AM	07:10AM	07:20AM	07:26AM	07:30AM	07:41AM	07:56AM
-	-	07:27AM	07:29AM	07:40AM	07:53AM	08:04AM	08:14AM	08:20AM	08:24AM	08:35AM	08:50AM

07:30AM	07:44AM	-	07:58AM	08:09AM	08:22AM	08:33AM	08:43AM	08:49AM	08:53AM	09:04AM	09:19AM
08:19AM	08:33AM	-	08:47AM	08:58AM	09:11AM	09:22AM	09:32AM	09:38AM	09:42AM	09:53AM	10:08AM
-	-	08:21AM	08:23AM	08:34AM	08:47AM	08:58AM	09:08AM	09:14AM	09:18AM	09:29AM	09:44AM
-	-	09:02AM	09:04AM	09:14AM	09:27AM	09:38AM	09:48AM	09:54AM	09:58AM	10:09AM	10:24AM
09:06AM	09:19AM	-	09:31AM	09:41AM	09:54AM	10:05AM	10:15AM	10:21AM	10:25AM	10:36AM	10:51AM
-	-	09:59AM	10:01AM	10:11AM	10:24AM	10:35AM	10:45AM	10:51AM	10:55AM	11:06AM	11:21AM
10:01AM	10:14AM	-	10:26AM	10:36AM	10:49AM	11:00AM	11:10AM	11:16AM	11:20AM	11:31AM	11:46AM
-	-	10:54AM	10:56AM	11:06AM	11:19AM	11:30AM	11:40AM	11:46AM	11:50AM	12:01PM	12:16PM
10:56AM	11:09AM	-	11:21AM	11:31AM	11:44AM	11:55AM	12:05PM	12:11PM	12:15PM	12:26PM	12:41PM
11:51AM	12:04PM	-	12:16PM	12:26PM	12:39PM	12:50PM	01:00PM	01:06PM	01:10PM	01:21PM	01:36PM
-	-	11:54AM	11:56AM	12:06PM	12:19PM	12:30PM	12:40PM	12:46PM	12:50PM	01:01PM	01:16PM
-	-	12:54PM	12:56PM	01:06PM	01:19PM	01:30PM	01:40PM	01:46PM	01:50PM	02:01PM	02:16PM
12:56PM	01:09PM	-	01:21PM	01:31PM	01:44PM	01:55PM	02:05PM	02:11PM	02:15PM	02:26PM	02:41PM
-	-	01:54PM	01:56PM	02:06PM	02:19PM	02:30PM	02:40PM	02:46PM	02:50PM	03:01PM	03:16PM
01:54PM	02:07PM	-	02:19PM	02:29PM	02:42PM	02:53PM	03:05PM	03:11PM	03:15PM	03:26PM	03:41PM

-	-	02:47PM	02:49PM	02:59PM	03:12PM	03:24PM	03:36PM	03:42PM	03:46PM	03:57PM	04:12PM
02:52PM	03:05PM	-	03:19PM	03:31PM	03:44PM	03:56PM	04:08PM	04:14PM	04:18PM	04:29PM	04:44PM
-	-	03:42PM	03:44PM	03:56PM	04:09PM	04:21PM	04:33PM	04:39PM	04:43PM	04:54PM	05:09PM
03:47PM	03:59PM	-	04:13PM	04:25PM	04:38PM	04:50PM	05:02PM	05:08PM	05:12PM	05:23PM	05:38PM
04:32PM	04:44PM	-	04:58PM	05:10PM	05:23PM	05:35PM	05:47PM	05:53PM	05:57PM	06:08PM	06:23PM
-	-	04:36PM	04:38PM	04:50PM	05:03PM	05:15PM	05:27PM	05:33PM	05:37PM	05:48PM	06:03PM
-	-	05:14PM	05:16PM	05:28PM	05:41PM	05:53PM	06:05PM	06:11PM	06:15PM	06:26PM	06:41PM
05:21PM	05:33PM	-	05:47PM	05:59PM	06:12PM	06:24PM	06:36PM	06:42PM	06:45PM	06:54PM	07:07PM
-	-	06:10PM	06:12PM	06:24PM	06:37PM	06:45PM	06:53PM	06:59PM	07:02PM	07:11PM	07:24PM
06:12PM	06:24PM	-	06:38PM	06:45PM	06:55PM	07:03PM	07:11PM	07:17PM	07:20PM	07:29PM	07:42PM
-	-	07:01PM	07:03PM	07:10PM	07:20PM	07:28PM	07:36PM	07:42PM	07:45PM	07:54PM	08:07PM
07:07PM	07:16PM	-	07:29PM	07:36PM	07:46PM	07:54PM	08:02PM	08:08PM	08:11PM	08:20PM	08:33PM
-	-	07:47PM	07:49PM	07:56PM	08:06PM	08:14PM	08:22PM	08:28PM	08:31PM	08:40PM	08:53PM
-	-	08:24PM	08:26PM	08:33PM	08:43PM	08:51PM	08:59PM	09:05PM	09:08PM	09:17PM	09:30PM
-	-	09:18PM	09:20PM	09:27PM	09:37PM	09:44PM	09:51PM	09:56PM	09:59PM	10:07PM	10:17PM

-	-	10:06PM	10:08PM	10:13PM	10:21PM	10:28PM	10:35PM	10:40PM	10:43PM	10:51PM	11:01PM
-	-	11:37PM	11:39PM	11:44PM	11:52PM	11:59PM	12:06AM	12:11AM	12:14AM	12:22AM	12:32AM

Back to previous page

TRANSPORTATION & PUBLIC WORKS

Alice N. Bravo, P.E., Director

Overtown Transit Village North

701 NW 1st Court, Suite 1700, Miami, FL 33136

786-469-5675 |

Contact Us | About Us

Employees Calendar Translate

Hurricane season runs through Nov. 30. Check out the **Hurricane Guide** to make sure you're ready for the next storm.

Menu Login

Bus Routes Schedule

54 (Westbound) WEEKDAY

NE 4 CT & 57 ST	NW 54 ST & 12 AV	BROWNSVILLE METRORAIL STATION	NW 54 ST & 32 AV	HIALEAH DR & E 4 AV	HIALEAH METRORAIL STATION	W 8 AV & 29 ST HIALEAH	W 49 ST & 17 CT WESTLAND MALL	W 24 AV & 60 ST HIALEAH	NW 87 CT & 114 ST	NW 82 AV & 154 ST	NW 186 ST & 84 AV
05:00AM	05:09AM	05:16AM	05:19AM	05:24AM	05:30AM	05:39AM	05:47AM	05:52AM	-	06:05AM	06:14AM
05:20AM	05:29AM	05:36AM	05:39AM	05:44AM	05:50AM	05:59AM	06:09AM	06:15AM	06:18AM	-	-
05:40AM	05:49AM	05:56AM	05:59AM	06:06AM	06:13AM	06:24AM	06:34AM	06:40AM	-	06:53AM	07:02AM
05:55AM	06:06AM	06:14AM	06:18AM	06:25AM	06:32AM	06:43AM	06:53AM	06:59AM	07:02AM	-	-
06:15AM	06:26AM	06:34AM	06:38AM	06:45AM	06:52AM	07:06AM	07:19AM	07:26AM	-	07:42AM	07:51AM
06:40AM	06:51AM	06:59AM	07:03AM	07:10AM	07:18AM	07:32AM	07:45AM	07:52AM	07:55AM	-	-
06:55AM	07:07AM	07:17AM	07:21AM	07:28AM	07:36AM	07:50AM	08:03AM	08:10AM	-	08:26AM	08:35AM

07:15AM	07:27AM	07:37AM	07:41AM	07:48AM	07:56AM	08:10AM	08:23AM	08:30AM	08:33AM	-	-
07:45AM	07:57AM	08:07AM	08:11AM	08:18AM	08:26AM	08:40AM	08:53AM	09:00AM	-	09:15AM	09:24AM
08:10AM	08:22AM	08:32AM	08:36AM	08:43AM	08:51AM	09:05AM	09:20AM	09:27AM	09:30AM	-	-
08:35AM	08:47AM	08:57AM	09:01AM	09:08AM	09:18AM	09:31AM	09:46AM	09:53AM	-	10:08AM	10:17AM
09:05AM	09:18AM	09:28AM	09:32AM	09:39AM	09:49AM	10:02AM	10:17AM	10:24AM	10:27AM	-	-
09:35AM	09:48AM	09:58AM	10:02AM	10:09AM	10:19AM	10:32AM	10:47AM	10:54AM	-	11:09AM	11:18AM
10:05AM	10:18AM	10:28AM	10:32AM	10:39AM	10:49AM	11:02AM	11:17AM	11:24AM	11:27AM	-	-
10:35AM	10:48AM	10:58AM	11:02AM	11:09AM	11:19AM	11:32AM	11:47AM	11:54AM	-	12:09PM	12:18PM
11:05AM	11:18AM	11:28AM	11:32AM	11:39AM	11:49AM	12:02PM	12:17PM	12:24PM	12:27PM	-	-
11:35AM	11:48AM	11:58AM	12:02PM	12:09PM	12:19PM	12:32PM	12:47PM	12:54PM	-	01:09PM	01:18PM
12:05PM	12:18PM	12:28PM	12:32PM	12:39PM	12:49PM	01:02PM	01:17PM	01:24PM	01:27PM	-	-
12:35PM	12:48PM	12:58PM	01:02PM	01:09PM	01:19PM	01:32PM	01:47PM	01:54PM	-	02:09PM	02:18PM
01:00PM	01:13PM	01:23PM	01:27PM	01:34PM	01:44PM	01:57PM	02:12PM	02:19PM	02:22PM	-	-
01:30PM	01:43PM	01:53PM	01:57PM	02:04PM	02:14PM	02:27PM	02:42PM	02:49PM	-	03:05PM	03:14PM
01:50PM	02:03PM	02:13PM	02:17PM	02:24PM	02:34PM	02:47PM	03:03PM	03:10PM	03:13PM	-	-

02:20PM	02:33PM	02:43PM	02:47PM	02:54PM	03:04PM	03:18PM	03:34PM	03:41PM	-	03:57PM	04:06PM
02:45PM	02:58PM	03:08PM	03:12PM	03:19PM	03:28PM	03:42PM	03:58PM	04:05PM	04:08PM	-	-
03:10PM	03:23PM	03:33PM	03:37PM	03:44PM	03:53PM	04:07PM	04:23PM	04:30PM	-	04:46PM	04:55PM
03:30PM	03:43PM	03:53PM	03:57PM	04:04PM	04:13PM	04:27PM	04:43PM	04:50PM	04:53PM	-	-
04:00PM	04:13PM	04:23PM	04:27PM	04:34PM	04:43PM	04:57PM	05:13PM	05:20PM	-	05:36PM	05:45PM
04:25PM	04:38PM	04:48PM	04:52PM	04:59PM	05:08PM	05:22PM	05:38PM	05:45PM	05:48PM	-	-
04:55PM	05:08PM	05:18PM	05:22PM	05:29PM	05:38PM	05:52PM	06:08PM	06:15PM	-	06:31PM	06:39PM
05:20PM	05:33PM	05:43PM	05:47PM	05:54PM	06:03PM	06:17PM	06:33PM	06:39PM	06:42PM	-	-
05:50PM	06:03PM	06:13PM	06:17PM	06:24PM	06:33PM	06:43PM	06:56PM	07:02PM	-	07:16PM	07:24PM
06:15PM	06:28PM	06:38PM	06:42PM	06:47PM	06:54PM	07:04PM	07:17PM	07:23PM	07:26PM	-	-
06:35PM	06:46PM	06:54PM	06:58PM	07:03PM	07:10PM	07:20PM	07:33PM	07:39PM	-	07:53PM	08:01PM
06:55PM	07:06PM	07:14PM	07:18PM	07:23PM	07:30PM	07:40PM	07:53PM	07:59PM	08:02PM	-	-
07:25PM	07:36PM	07:44PM	07:48PM	07:53PM	08:00PM	08:10PM	08:23PM	08:29PM	08:32PM	-	-
07:55PM	08:06PM	08:14PM	08:18PM	08:23PM	08:30PM	08:40PM	08:53PM	08:59PM	09:02PM	-	-
08:20PM	08:31PM	08:39PM	08:43PM	08:48PM	08:55PM	09:05PM	09:18PM	09:24PM	09:27PM	-	-

08:50PM	09:01PM	09:09PM	09:13PM	09:18PM	09:25PM	09:35PM	09:43PM	09:47PM	09:50PM	-	-
09:40PM	09:49PM	09:56PM	10:00PM	10:04PM	10:10PM	10:18PM	10:26PM	10:30PM	10:33PM	-	-
10:30PM	10:39PM	10:46PM	10:50PM	10:54PM	11:00PM	11:08PM	11:16PM	11:20PM	11:23PM	-	-
11:20PM	11:29PM	11:36PM	11:40PM	11:44PM	11:50PM	11:58PM	12:06AM	12:10AM	12:13AM	-	-

Back to previous page

TRANSPORTATION & PUBLIC WORKS

Alice N. Bravo, P.E., Director

Overtown Transit Village North

73

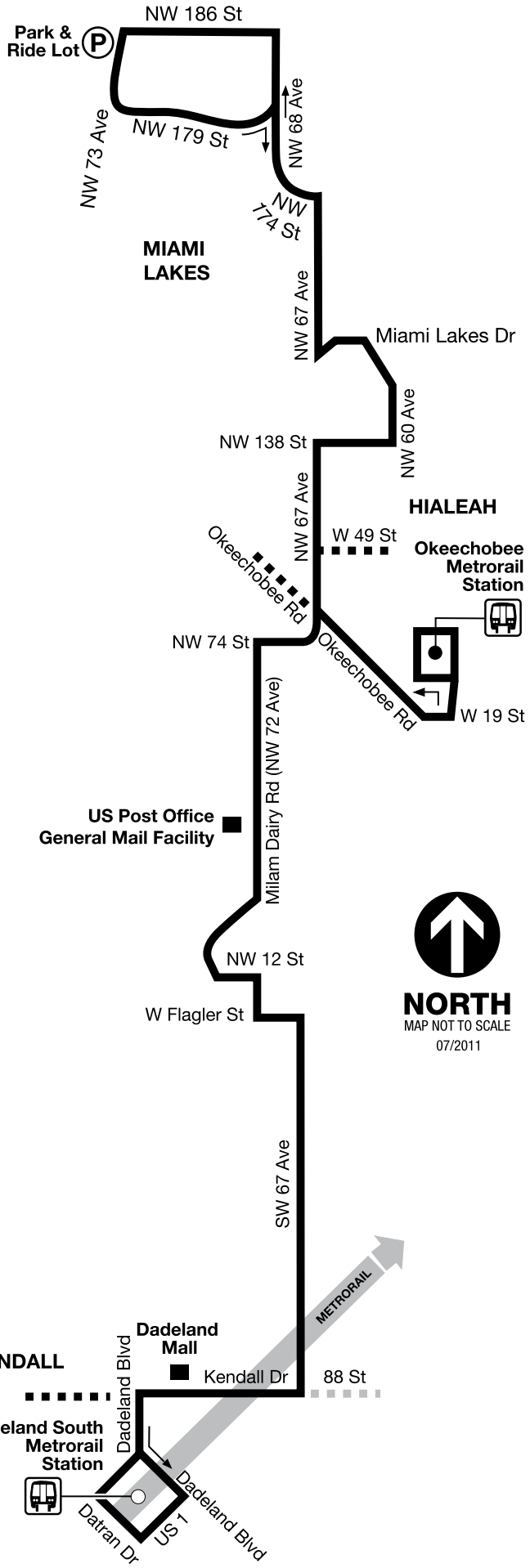
NW 186 St
Park & Ride Lot
NW 73 Ave
NW 179 St
NW 68 Ave
NW 174 St
MIAMI LAKES
NW 67 Ave
Miami Lakes Dr
NW 60 Ave
NW 138 St
HIALEAH
NW 67 Ave
W 49 St
Okeechobee Metrorail Station
Okeechobee Rd
NW 74 St
Okeechobee Rd
W 19 St
Milam Dairy Rd (NW 72 Ave)
US Post Office General Mail Facility
NW 12 St
W Flagler St
NORTH
MAP NOT TO SCALE
07/2011
SW 67 Ave
METRORAIL
KENDALL
Dadeland Mall
Dadeland Blvd
Kendall Dr
88 St
Dadeland South Metrorail Station
Dadeland Blvd
Datran Dr
SR 5

Employees Calendar Translate

Hurricane season runs through Nov. 30. Check out the **Hurricane Guide** to make sure you're ready for the next storm.

Menu Login

Bus Routes Schedule

miamidade.gov METROBUS

73 (Northbound) WEEKDAY

DADELAND SOUTH METRORAIL STATION	SW 67 AV & 24 ST	W FLAGLER ST & TAMIAMI CANAL RD	NW 72 AV & 22 ST	OKEECHOBEE METRORAIL STATION	W 12 AV & 48 ST	NW 60 AV & MIAMI LAKES DR	NW 68 AV & 186 ST
05:00AM	05:16AM	05:24AM	05:32AM	05:45AM	05:54AM	06:06AM	06:18AM
05:30AM	05:46AM	05:54AM	06:02AM	06:15AM	06:24AM	06:38AM	06:51AM
05:56AM	06:12AM	06:20AM	06:28AM	06:45AM	06:56AM	07:11AM	07:25AM
06:14AM	06:38AM	06:48AM	06:58AM	07:15AM	07:27AM	07:42AM	07:56AM
06:34AM	07:06AM	07:18AM	07:28AM	07:45AM	07:57AM	08:12AM	08:26AM
07:04AM	07:36AM	07:48AM	07:58AM	08:15AM	08:27AM	08:42AM	08:56AM
07:34AM	08:06AM	08:18AM	08:28AM	08:45AM	08:57AM	09:12AM	09:25AM

08:04AM	08:36AM	08:48AM	08:58AM	09:15AM	09:28AM	09:42AM	09:55AM
08:46AM	09:18AM	09:29AM	09:39AM	09:55AM	10:08AM	10:22AM	10:35AM
09:33AM	09:58AM	10:09AM	10:19AM	10:35AM	10:48AM	11:02AM	11:15AM
10:13AM	10:38AM	10:49AM	10:59AM	11:15AM	11:28AM	11:42AM	11:55AM
10:53AM	11:18AM	11:29AM	11:39AM	11:55AM	12:10PM	12:26PM	12:40PM
11:32AM	11:57AM	12:08PM	12:18PM	12:35PM	12:50PM	01:06PM	01:20PM
12:12PM	12:37PM	12:48PM	12:58PM	01:15PM	01:30PM	01:46PM	02:00PM
12:52PM	01:17PM	01:28PM	01:38PM	01:55PM	02:10PM	02:26PM	02:40PM
01:32PM	01:57PM	02:08PM	02:18PM	02:35PM	02:50PM	03:07PM	03:24PM
02:08PM	02:33PM	02:44PM	02:54PM	03:15PM	03:31PM	03:48PM	04:05PM
02:32PM	03:01PM	03:13PM	03:24PM	03:45PM	04:01PM	04:19PM	04:36PM
03:03PM	03:32PM	03:44PM	03:55PM	04:20PM	04:36PM	04:54PM	05:11PM
03:36PM	04:05PM	04:19PM	04:30PM	04:55PM	05:11PM	05:30PM	05:47PM
04:06PM	04:33PM	04:47PM	04:58PM	05:30PM	05:46PM	06:05PM	06:20PM
04:39PM	05:07PM	05:22PM	05:33PM	06:05PM	06:20PM	06:37PM	06:52PM

05:14PM	05:42PM	05:57PM	06:08PM	06:35PM	06:50PM	07:07PM	07:22PM
05:48PM	06:16PM	06:30PM	06:40PM	07:07PM	07:19PM	07:33PM	07:48PM
06:18PM	06:41PM	06:55PM	-	-	-	-	-
06:48PM	07:11PM	07:21PM	07:31PM	07:45PM	07:57PM	08:11PM	08:26PM
07:51PM	08:12PM	08:22PM	08:32PM	08:45PM	08:57PM	09:10PM	09:21PM
08:56PM	09:17PM	09:26PM	09:35PM	09:48PM	09:58PM	10:10PM	10:21PM

Back to previous page

Employees Calendar Translate

Hurricane season runs through Nov. 30. Check out the **Hurricane Guide** to make sure you're ready for the next storm.

Menu Login

Bus Routes Schedule

73 (Southbound) WEEKDAY

NW 68 AV & 186 ST	NW 60 AV & MIAMI LAKES DR	W 12 AV & 49 ST HIALEAH	OKEECHOBEE METRORAIL STATION	NW 72 AV & 19 ST	W FLAGLER ST & SW 72 AV	SW 67 AV & 24 ST	DADELAND SOUTH METRORAIL STATION
04:48AM	05:02AM	05:14AM	05:23AM	05:41AM	05:51AM	06:01AM	06:21AM
05:25AM	05:39AM	05:51AM	06:00AM	06:18AM	06:28AM	06:39AM	07:06AM
05:53AM	06:07AM	06:19AM	06:30AM	06:53AM	07:05AM	07:17AM	07:44AM
06:19AM	06:34AM	06:49AM	07:00AM	07:26AM	07:38AM	07:50AM	08:17AM
06:40AM	07:01AM	07:19AM	07:30AM	07:56AM	08:08AM	08:20AM	08:47AM
07:10AM	07:31AM	07:49AM	08:00AM	08:26AM	08:38AM	08:50AM	09:17AM
07:40AM	08:01AM	08:19AM	08:30AM	08:56AM	09:08AM	09:19AM	09:42AM

08:10AM	08:31AM	08:49AM	09:00AM	09:26AM	09:36AM	09:47AM	10:10AM
08:43AM	09:04AM	09:19AM	09:30AM	09:56AM	10:06AM	10:17AM	10:40AM
09:18AM	09:34AM	09:49AM	10:00AM	10:26AM	10:36AM	10:47AM	11:10AM
09:58AM	10:14AM	10:29AM	10:40AM	11:06AM	11:16AM	11:27AM	11:50AM
10:38AM	10:54AM	11:09AM	11:20AM	11:46AM	11:56AM	12:08PM	12:33PM
11:18AM	11:34AM	11:49AM	12:00PM	12:24PM	12:34PM	12:46PM	01:11PM
11:55AM	12:13PM	12:29PM	12:40PM	01:04PM	01:14PM	01:26PM	01:51PM
12:35PM	12:53PM	01:09PM	01:20PM	01:44PM	01:54PM	02:06PM	02:31PM
01:15PM	01:33PM	01:49PM	02:00PM	02:24PM	02:34PM	02:46PM	03:14PM
01:45PM	02:03PM	02:19PM	02:30PM	02:54PM	03:05PM	03:19PM	03:47PM
02:15PM	02:33PM	02:49PM	03:00PM	03:26PM	03:37PM	03:51PM	04:21PM
02:44PM	03:02PM	03:19PM	03:30PM	03:56PM	04:09PM	04:23PM	04:53PM
03:16PM	03:32PM	03:49PM	04:00PM	04:27PM	04:40PM	04:54PM	05:26PM
03:45PM	04:01PM	04:19PM	04:30PM	04:57PM	05:13PM	05:29PM	06:01PM
04:16PM	04:31PM	04:49PM	05:00PM	05:31PM	05:47PM	06:03PM	06:32PM

04:45PM	05:00PM	05:19PM	05:30PM	06:01PM	06:16PM	06:31PM	07:00PM
05:30PM	05:45PM	06:04PM	06:15PM	06:42PM	06:57PM	07:12PM	07:35PM
06:53PM	07:08PM	07:21PM	07:30PM	07:48PM	07:58PM	08:09PM	08:29PM
07:54PM	08:09PM	08:21PM	08:30PM	08:48PM	08:58PM	09:08PM	09:28PM
08:55PM	09:09PM	09:21PM	09:30PM	09:48PM	09:58PM	10:08PM	10:28PM

Back to previous page

TRANSPORTATION & PUBLIC WORKS

Alice N. Bravo, P.E., Director

95 EXPRESS GOLDEN GLADES

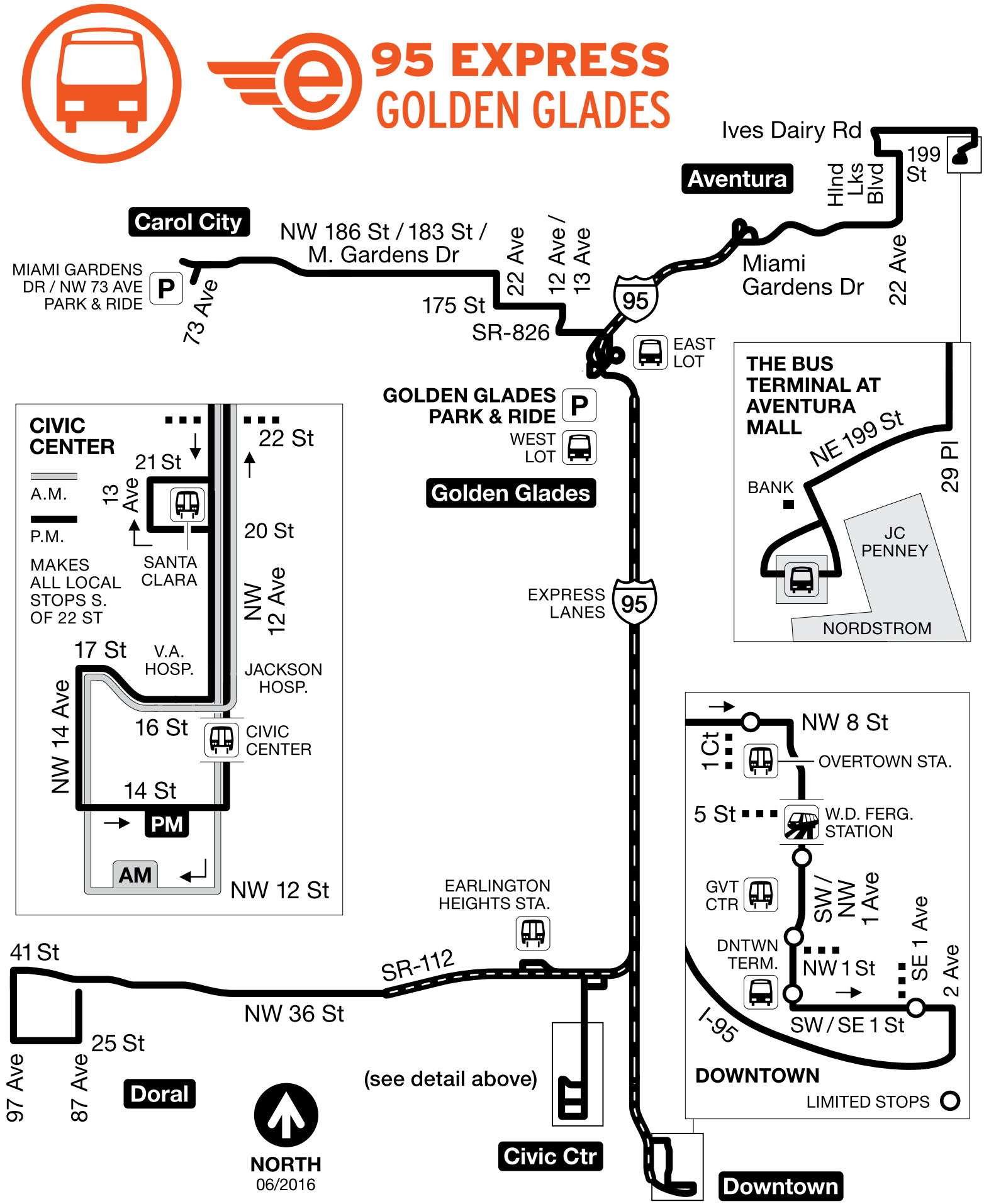

Employees Calendar Translate

Hurricane season runs through Nov. 30. Check out the **Hurricane Guide** to make sure you're ready for the next storm.

Menu Login

Bus Routes Schedule

miamidade.gov METROBUS

95 (Northbound) WEEKDAY

NW 87 AV & NW 36 ST	NW 41 ST & 97 AV	NW 36 ST & MILLER DR	EARLINGTON HEIGHTS METRORAIL STATION	SANTA CLARA STA & 2050 NW 12 AV	NW 16 ST & 12 AV	NW 16 ST & 12 AV	NW 8 ST & 1 CT	SE 1 ST & 1 AV	Golden Glades (East Lot)	BUS TERMINAL AT AVENTURA MALL	NW 73 AV &186 ST
-	-	-	-	-	-	-	-	05:50AM	06:12AM	-	-
-	-	-	-	-	-	06:18AM	-	-	06:44AM	-	-
-	-	-	-	-	-	-	-	06:33AM	06:55AM	-	-
-	-	-	-	-	-	06:48AM	-	-	07:15AM	-	-
-	-	-	-	-	-	-	-	06:53AM	07:15AM	-	-
-	-	-	-	-	-	-	-	07:09AM	07:31AM	-	-
-	-	-	-	-	-	-	-	07:24AM	07:46AM	-	-

	-	-	-	-	-	-	07:33AM	-	-	08:00AM	-	-
	-	-	-	-	-	-	-	-	07:39AM	08:01AM	-	-
	-	-	-	-	-	-	07:44AM	-	-	08:11AM	-	-
	-	-	-	-	-	-	-	-	07:49AM	08:11AM	-	-
	-	-	-	-	-	-	-	-	07:54AM	08:16AM	-	-
	-	-	-	-	-	-	-	-	07:59AM	08:21AM	-	-
	-	-	-	-	-	-	-	-	08:04AM	08:26AM	-	-
	-	-	-	-	-	-	-	-	08:09AM	08:31AM	-	-
	-	-	-	-	-	-	08:18AM	-	-	08:45AM	-	-
	-	-	-	-	-	-	-	-	08:19AM	08:41AM	-	-
	-	-	-	-	-	-	-	-	08:29AM	08:51AM	-	-
	-	-	-	-	-	-	-	-	08:44AM	09:06AM	-	-
	-	-	-	-	-	-	-	-	08:59AM	09:21AM	-	-
	-	-	-	-	-	-	-	-	09:25AM	09:47AM	-	-
	-	-	-	-	-	-	-	-	09:50AM	10:12AM	-	-

	-	-	-	-	-	-	-	03:02PM	03:10PM	03:38PM	-	-
	-	-	-	-	-	-	-	03:22PM	03:30PM	03:58PM	-	-
	-	-	-	-	03:27PM	03:30PM	-	-	-	03:56PM	-	-
	-	-	-	-	03:37PM	03:40PM	-	-	-	04:13PM	-	-
	-	-	-	-	-	-	-	03:37PM	03:45PM	04:15PM	-	-
	-	-	-	-	-	-	-	03:52PM	04:00PM	04:30PM	-	-
	-	-	-	-	03:57PM	04:00PM	-	-	-	04:33PM	-	-
	-	-	-	-	-	-	-	03:57PM	04:05PM	04:35PM	-	05:10PM
	-	-	-	-	04:07PM	04:10PM	-	-	-	04:43PM	-	-
	-	-	-	-	-	-	-	04:07PM	04:15PM	04:45PM	-	-
	-	-	-	-	-	-	-	04:12PM	04:20PM	04:50PM	-	-
	-	-	-	-	-	-	-	04:17PM	04:25PM	04:55PM	-	-
	-	-	-	-	04:17PM	04:20PM	-	-	-	04:53PM	05:25PM	-
	-	-	-	-	-	-	-	04:22PM	04:30PM	05:00PM	-	-
	-	-	-	-	-	-	-	04:27PM	04:35PM	05:05PM	-	-

	-	-	-	-	04:27PM	04:30PM	-	-	-	05:03PM	-	-
	-	-	-	-	-	-	-	04:32PM	04:40PM	05:10PM	-	-
	-	-	-	-	-	-	-	04:37PM	04:45PM	05:15PM	-	05:50PM
	-	-	-	-	04:42PM	04:45PM	-	-	-	05:18PM	-	-
	-	-	-	-	-	-	-	04:42PM	04:50PM	05:20PM	-	-
	-	-	-	-	-	-	-	04:47PM	04:55PM	05:25PM	-	-
	-	-	-	-	-	-	-	04:52PM	05:00PM	05:30PM	-	-
	-	-	-	-	04:57PM	05:00PM	-	-	-	05:33PM	-	-
	-	-	-	-	-	-	-	04:57PM	05:05PM	05:35PM	-	-
	-	-	-	-	-	-	-	04:59PM	05:07PM	05:37PM	-	-
	-	-	-	-	-	-	-	05:02PM	05:10PM	05:40PM	-	-
	-	-	-	-	-	-	-	05:07PM	05:15PM	05:45PM	-	-
	05:08PM	05:29PM	06:06PM	06:13PM	-	-	-	-	-	06:36PM	-	-
	-	-	-	-	-	-	-	05:12PM	05:20PM	05:50PM	-	-
	-	-	-	-	05:12PM	05:15PM	-	-	-	05:48PM	06:20PM	-

-	-	-	-	-	-	-	05:17PM	05:25PM	05:55PM	-	-
-	-	-	-	-	-	-	05:22PM	05:30PM	06:00PM	-	06:35PM
-	-	-	-	-	-	-	05:27PM	05:35PM	06:05PM	-	-
-	-	-	-	05:32PM	05:35PM	-	-	-	06:08PM	06:40PM	-
-	-	-	-	-	-	-	05:37PM	05:45PM	06:15PM	-	-
-	-	-	-	-	-	-	05:52PM	06:00PM	06:26PM	-	07:01PM
-	-	-	-	-	-	-	06:07PM	06:15PM	06:41PM	-	-
-	-	-	-	06:07PM	06:10PM	-	-	-	06:32PM	-	-
-	-	-	-	-	-	-	06:22PM	06:30PM	06:56PM	-	-
-	-	-	-	-	-	-	06:52PM	07:00PM	07:26PM	-	-
-	-	-	-	-	-	-	07:22PM	07:30PM	07:56PM	-	-

Back to previous page

TRANSPORTATION & PUBLIC WORKS

Alice N. Bravo, P.E., Director

Overtown Transit Village North

701 NW 1st Court, Suite 1700, Miami, FL 33136

786-469-5675 |

Contact Us | About Us

Employees Calendar Translate

Hurricane season runs through Nov. 30. Check out the **Hurricane Guide** to make sure you're ready for the next storm.

Menu Login

Bus Routes Schedule

95 (Southbound) WEEKDAY

NW 186 ST & 73 AV	BUS TERMINAL AT AVENTURA MALL	Golden Glades (East Lot)	NW 8 ST & 1 CT	SE 1 ST & 1 AV	SANTA CLARA STA & 2050 NW 12 AV	NW 16 ST & 12 AV	EARLINGTON HEIGHTS METRORAIL STATION	NW 36 ST & EAST DR	NW 97 AV & 41 ST	NW 87 AV & # 3737
-	-	05:28AM	05:48AM	05:50AM	-	-	-	-	-	-
05:40AM	-	06:08AM	06:30AM	06:33AM	-	-	-	-	-	-
-	-	05:58AM	06:20AM	06:23AM	-	-	-	-	-	-
-	-	06:01AM	-	-	-	06:18AM	-	-	-	-
-	-	06:16AM	-	-	-	06:33AM	-	-	-	-
-	-	06:18AM	06:40AM	06:43AM	-	-	-	-	-	-
06:22AM	-	06:58AM	07:26AM	07:29AM	-	-	-	-	-	-

	-	06:25AM	06:51AM	-	-	-	07:14AM	-	-	-	-
	-	-	06:28AM	06:50AM	06:53AM	-	-	-	-	-	-
	-	-	06:31AM	-	-	-	06:48AM	-	-	-	-
	-	-	06:38AM	07:06AM	07:09AM	-	-	-	-	-	-
	-	-	06:44AM	-	-	-	-	07:00AM	07:11AM	07:29AM	07:42AM
	-	-	06:45AM	07:13AM	07:16AM	-	-	-	-	-	-
	-	-	06:53AM	07:21AM	07:24AM	-	-	-	-	-	-
	-	06:54AM	07:21AM	-	-	-	07:44AM	-	-	-	-
	06:57AM	-	07:33AM	08:01AM	08:04AM	-	-	-	-	-	-
	-	-	07:03AM	07:31AM	07:34AM	-	-	-	-	-	-
	-	-	07:06AM	-	-	-	07:28AM	-	-	-	-
	-	-	07:08AM	07:36AM	07:39AM	-	-	-	-	-	-
	-	-	07:11AM	-	-	-	07:33AM	-	-	-	-
	-	-	07:13AM	07:41AM	07:44AM	-	-	-	-	-	-
	-	07:14AM	07:41AM	-	-	-	08:04AM	-	-	-	-

	-	-	07:16AM	-	-	-	07:38AM	-	-	-	-
	-	-	07:18AM	07:46AM	07:49AM	-	-	-	-	-	-
	-	-	07:20AM	07:48AM	07:51AM	-	-	-	-	-	-
	-	-	07:23AM	07:51AM	07:54AM	-	-	-	-	-	-
	-	-	07:28AM	07:56AM	07:59AM	-	-	-	-	-	-
	-	-	07:30AM	07:58AM	08:01AM	-	-	-	-	-	-
	-	-	07:31AM	-	-	-	07:53AM	-	-	-	-
	07:32AM	-	08:08AM	08:36AM	08:39AM	-	-	-	-	-	-
	-	-	07:35AM	08:03AM	08:06AM	-	-	-	-	-	-
	-	-	07:38AM	08:06AM	08:09AM	-	-	-	-	-	-
	-	-	07:43AM	08:11AM	08:14AM	-	-	-	-	-	-
	-	-	07:48AM	08:16AM	08:19AM	-	-	-	-	-	-
	-	-	07:53AM	08:21AM	08:24AM	-	-	-	-	-	-
	-	-	07:56AM	-	-	-	08:18AM	-	-	-	-
	-	-	07:58AM	08:26AM	08:29AM	-	-	-	-	-	-

	-	-	08:03AM	08:31AM	08:34AM	-	-	-	-	-	-
	-	-	08:13AM	08:41AM	08:44AM	-	-	-	-	-	-
	-	-	08:16AM	-	-	-	08:38AM	-	-	-	-
	-	-	08:18AM	08:46AM	08:49AM	-	-	-	-	-	-
	-	-	08:28AM	08:56AM	08:59AM	-	-	-	-	-	-
	-	-	08:38AM	09:06AM	09:09AM	-	-	-	-	-	-
	-	-	09:03AM	09:23AM	09:25AM	-	-	-	-	-	-
	-	-	09:28AM	09:48AM	09:50AM	-	-	-	-	-	-
	-	-	02:23PM	02:45PM	-	-	-	-	-	-	-
	-	-	03:28PM	03:50PM	-	-	-	-	-	-	-
	-	-	04:00PM	04:22PM	-	-	-	-	-	-	-
	-	-	04:15PM	04:37PM	-	-	-	-	-	-	-
	-	-	04:17PM	-	-	04:42PM	-	-	-	-	-
	-	-	04:32PM	-	-	04:57PM	-	-	-	-	-
	-	-	05:05PM	05:27PM	-	-	-	-	-	-	-

-	-	05:40PM	06:02PM	-	-	-	-	-	-	-
-	-	06:15PM	06:35PM	-	-	-	-	-	-	-

Back to previous page

TRANSPORTATION & PUBLIC WORKS

Alice N. Bravo, P.E., Director

Overtown Transit Village North

701 NW 1st Court, Suite 1700, Miami, FL 33136

786-469-5675 |

Contact Us | About Us

Route 99

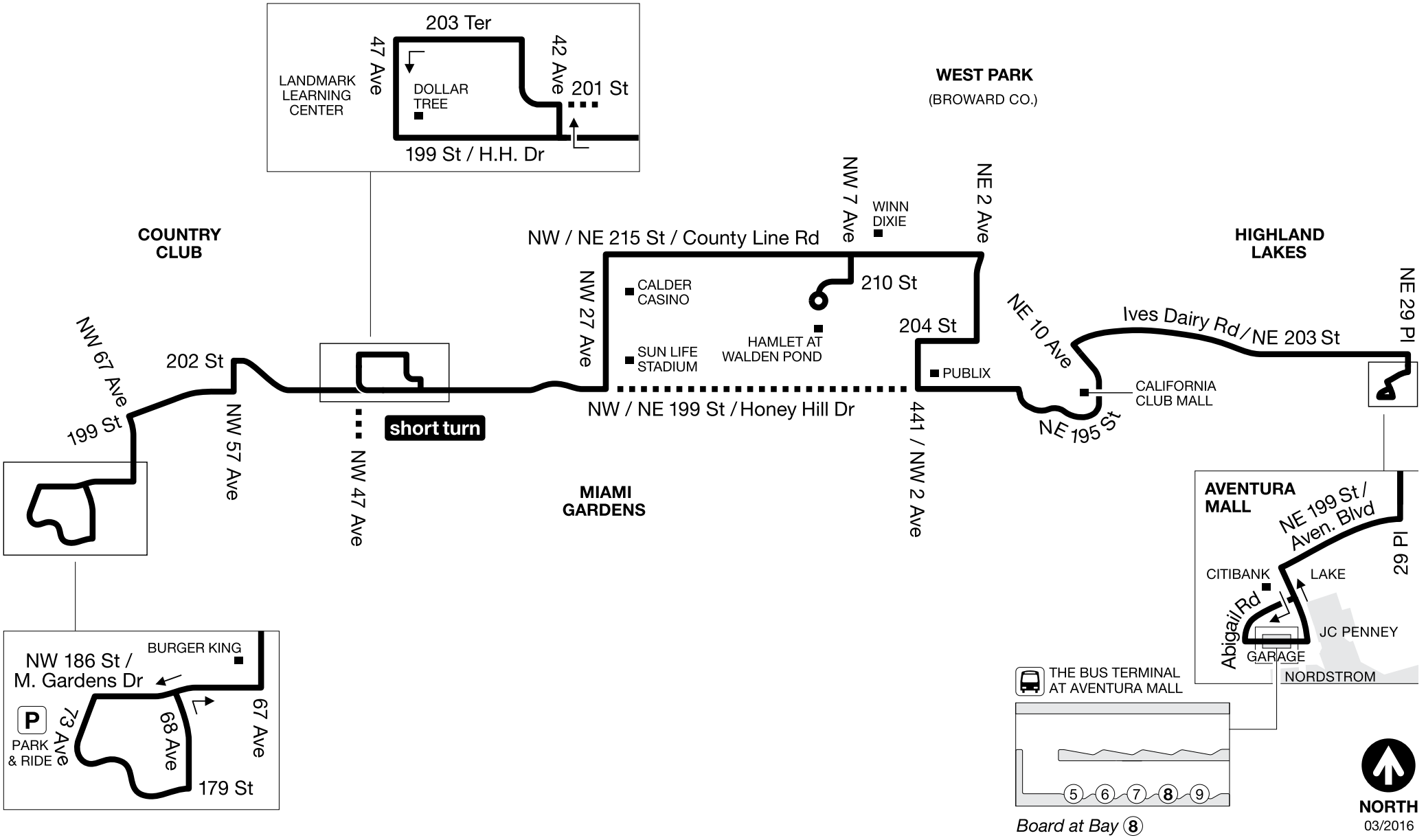
203 Ter
47 Ave
42 Ave
LANDMARK LEARNING CENTER
DOLLAR TREE
201 St
199 St / H.H. Dr
WEST PARK
(BROWARD CO.)
COUNTRY CLUB
NW / NE 215 St / County Line Rd
NW 7 Ave
WINN DIXIE
NE 2 Ave
HIGHLAND LAKES
NW 27 Ave
CALDER CASINO
210 St
NE 29 Pl
NW 67 Ave
202 St
SUN LIFE STADIUM
HAMLET AT WALDEN POND
204 St
NE 10 Ave
Ives Dairy Rd / NE 203 St
PUBLIX
CALIFORNIA CLUB MALL
199 St
NW 57 Ave
short turn
NW / NE 199 St / Honey Hill Dr
441 / NW 2 Ave
NE 195 St
NW 47 Ave
MIAMI GARDENS
AVENTURA MALL
NE 199 St / Aven. Blvd
CITIBANK
LAKE
NE 29 Pl
Abigail Rd
JC PENNEY
GARAGE
NORDSTROM
BURGER KING
NW 186 St / M. Gardens Dr
P
PARK & RIDE
73 Ave
68 Ave
67 Ave
179 St
THE BUS TERMINAL AT AVENTURA MALL
5 6 7 8 9
Board at Bay 8
NORTH
03/2016

Employees Calendar Translate

Hurricane season runs through Nov. 30. Check out the **Hurricane Guide** to make sure you're ready for the next storm.

Menu Login

Bus Routes Schedule

99 (Eastbound) WEEKDAY

NW 186 ST & 67 AV	NW 199 ST & 47 AV	NW 27 AV & 199 ST	NW 215 ST & 2 AV	NE 199 ST & 2 AV	NE 10 AV & 199 ST	NE 203 ST & 20 AV	BUS TERMINAL AT AVENTURA MALL
-	05:03AM	05:09AM	05:22AM	05:29AM	05:32AM	05:38AM	05:45AM
05:15AM	05:30AM	05:36AM	05:49AM	05:56AM	05:59AM	06:07AM	06:15AM
-	05:53AM	06:00AM	06:16AM	06:25AM	06:29AM	06:37AM	06:45AM
06:08AM	06:23AM	06:30AM	06:46AM	06:55AM	06:59AM	07:07AM	07:15AM
06:33AM	06:53AM	07:00AM	07:16AM	07:25AM	07:29AM	07:37AM	07:45AM
07:03AM	07:23AM	07:30AM	07:46AM	07:55AM	07:59AM	08:07AM	08:15AM
-	07:53AM	08:00AM	08:16AM	08:25AM	08:29AM	08:37AM	08:45AM

08:07AM	08:27AM	08:34AM	08:50AM	09:00AM	09:04AM	09:12AM	09:20AM
-	08:53AM	09:00AM	09:15AM	09:25AM	09:29AM	09:37AM	09:45AM
09:10AM	09:28AM	09:35AM	09:50AM	10:00AM	10:04AM	10:12AM	10:20AM
-	09:53AM	10:00AM	10:15AM	10:25AM	10:29AM	10:37AM	10:45AM
10:10AM	10:28AM	10:35AM	10:50AM	11:00AM	11:04AM	11:12AM	11:20AM
-	10:53AM	11:00AM	11:15AM	11:25AM	11:29AM	11:37AM	11:45AM
11:10AM	11:28AM	11:35AM	11:50AM	12:00PM	12:04PM	12:12PM	12:20PM
-	11:53AM	12:00PM	12:15PM	12:25PM	12:29PM	12:37PM	12:45PM
12:10PM	12:28PM	12:35PM	12:50PM	01:00PM	01:04PM	01:12PM	01:20PM
-	12:53PM	01:00PM	01:15PM	01:25PM	01:29PM	01:37PM	01:45PM
01:10PM	01:28PM	01:35PM	01:50PM	02:00PM	02:04PM	02:12PM	02:20PM
-	01:53PM	02:00PM	02:15PM	02:25PM	02:29PM	02:37PM	02:45PM
02:10PM	02:28PM	02:35PM	02:50PM	03:00PM	03:04PM	03:12PM	03:20PM
-	03:00PM	03:07PM	03:22PM	03:32PM	03:36PM	03:45PM	03:55PM
03:11PM	03:29PM	03:37PM	03:52PM	04:02PM	04:06PM	04:15PM	04:25PM

-	03:59PM	04:07PM	04:22PM	04:32PM	04:36PM	04:45PM	04:55PM
04:14PM	04:34PM	04:42PM	04:57PM	05:07PM	05:11PM	05:20PM	05:30PM
-	05:09PM	05:17PM	05:32PM	05:42PM	05:46PM	05:55PM	06:05PM
05:26PM	05:46PM	05:54PM	06:09PM	06:19PM	06:23PM	06:32PM	06:40PM
06:06PM	06:26PM	06:34PM	06:48PM	06:56PM	07:00PM	07:07PM	07:15PM
06:49PM	07:07PM	07:14PM	07:28PM	07:36PM	07:40PM	07:47PM	07:55PM
07:34PM	07:52PM	07:59PM	08:13PM	08:21PM	08:25PM	08:32PM	08:40PM
08:39PM	08:57PM	09:04PM	09:18PM	09:26PM	09:30PM	09:37PM	09:45PM

Back to previous page

TRANSPORTATION & PUBLIC WORKS

Alice N. Bravo, P.E., Director

Overtown Transit Village North

701 NW 1st Court, Suite 1700, Miami, FL 33136

786-469-5675 |

Contact Us | About Us

Employees Calendar Translate

Hurricane season runs through Nov. 30. Check out the **Hurricane Guide** to make sure you're ready for the next storm.

Menu Login

Bus Routes Schedule

miamidade.gov METROBUS

99 (Westbound) WEEKDAY

BUS TERMINAL AT AVENTURA MALL	NE 203 ST & 20 AV	NE 10 AV & 199 ST	NE 199 ST & 2 AV	NW 215 ST & US 441	NW 27 AV & 199 ST	NW 199 ST & 47 AV	NW 186 ST & 67 AV
05:30AM	05:37AM	05:42AM	05:46AM	05:53AM	06:07AM	06:13AM	06:22AM
05:55AM	06:04AM	06:12AM	06:16AM	06:25AM	06:39AM	06:45AM	06:54AM
06:30AM	06:39AM	06:47AM	06:51AM	07:00AM	07:16AM	07:24AM	-
06:55AM	07:04AM	07:12AM	07:16AM	07:25AM	07:41AM	07:47AM	07:57AM
07:30AM	07:39AM	07:47AM	07:51AM	08:00AM	08:16AM	08:24AM	-
07:55AM	08:04AM	08:12AM	08:16AM	08:25AM	08:41AM	08:47AM	08:57AM
08:25AM	08:34AM	08:42AM	08:46AM	08:55AM	09:11AM	09:20AM	-

	08:55AM	09:05AM	09:12AM	09:18AM	09:28AM	09:42AM	09:48AM	09:58AM
	09:30AM	09:40AM	09:47AM	09:53AM	10:03AM	10:17AM	10:26AM	-
	09:55AM	10:05AM	10:12AM	10:18AM	10:28AM	10:42AM	10:48AM	10:58AM
	10:30AM	10:40AM	10:47AM	10:53AM	11:03AM	11:17AM	11:26AM	-
	10:55AM	11:05AM	11:12AM	11:18AM	11:28AM	11:42AM	11:48AM	11:58AM
	11:30AM	11:40AM	11:47AM	11:53AM	12:03PM	12:17PM	12:26PM	-
	11:55AM	12:05PM	12:12PM	12:18PM	12:28PM	12:42PM	12:48PM	12:58PM
	12:30PM	12:40PM	12:47PM	12:53PM	01:03PM	01:17PM	01:26PM	-
	12:55PM	01:05PM	01:12PM	01:18PM	01:28PM	01:42PM	01:48PM	01:58PM
	01:30PM	01:40PM	01:47PM	01:53PM	02:03PM	02:17PM	02:26PM	-
	01:55PM	02:05PM	02:12PM	02:18PM	02:28PM	02:42PM	02:48PM	02:58PM
	02:30PM	02:40PM	02:47PM	02:53PM	03:03PM	03:17PM	03:26PM	-
	02:55PM	03:05PM	03:12PM	03:18PM	03:28PM	03:44PM	03:51PM	04:02PM
	03:30PM	03:44PM	03:52PM	03:58PM	04:09PM	04:25PM	04:35PM	-
	03:50PM	04:04PM	04:12PM	04:18PM	04:29PM	04:45PM	04:52PM	05:03PM

04:10PM	04:24PM	04:32PM	04:38PM	04:49PM	05:05PM	05:12PM	05:23PM
04:35PM	04:49PM	04:57PM	05:03PM	05:14PM	05:30PM	05:37PM	05:48PM
05:05PM	05:19PM	05:27PM	05:33PM	05:44PM	06:00PM	06:07PM	06:18PM
05:40PM	05:54PM	06:02PM	06:08PM	06:19PM	06:35PM	06:41PM	06:50PM
06:15PM	06:29PM	06:37PM	06:41PM	06:51PM	07:05PM	07:11PM	07:20PM
06:50PM	07:00PM	07:07PM	07:11PM	07:21PM	07:35PM	07:43PM	-
07:25PM	07:35PM	07:42PM	07:46PM	07:56PM	08:10PM	08:16PM	08:25PM
08:05PM	08:15PM	08:22PM	08:26PM	08:36PM	08:50PM	08:58PM	-
08:50PM	09:00PM	09:07PM	09:11PM	09:21PM	09:35PM	09:41PM	09:50PM
09:50PM	10:00PM	10:05PM	10:09PM	10:16PM	10:28PM	10:33PM	10:42PM

Back to previous page

TRANSPORTATION & PUBLIC WORKS

Alice N. Bravo, P.E., Director

Overtown Transit Village North

701 NW 1st Court, Suite 1700, Miami, FL 33136

786-469-5675 |

Contact Us | About Us

183

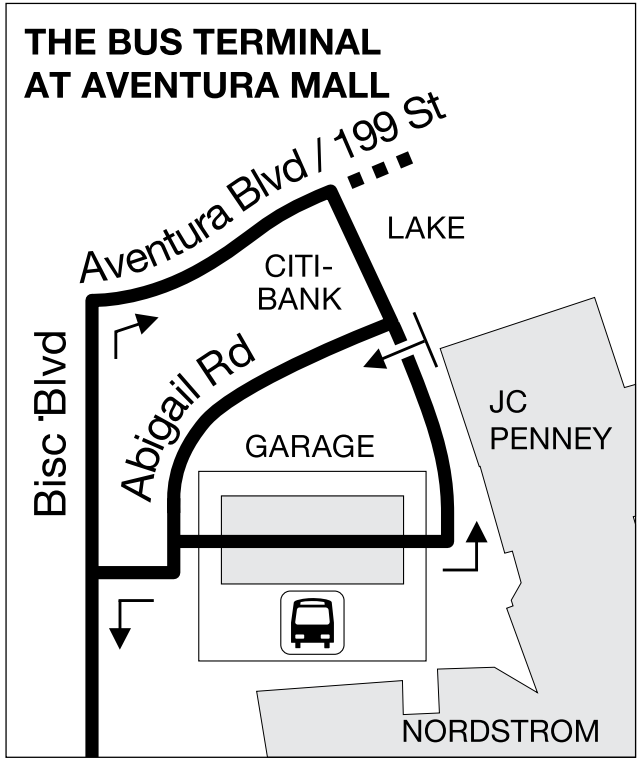

NORTH
08/2017

73 Ave
68 Ave
NW 57 Ave
NW 27 Ave
MIAMI
GARDENS
SR 441 / NW 2 Ave
Miami Gardens Dr
NW 183 St
NE 185/186 St
P
PARK
& RIDE
179 St
SKYLAKE
MALL
Biscayne Blvd
NORTH
MIAMI BEACH

Employees Calendar Translate

Hurricane season runs through Nov. 30. Check out the **Hurricane Guide** to make sure you're ready for the next storm.

Menu MIAMI-DADE COUNTY Login

miamidade.gov METROBUS

183 (Eastbound) WEEKDAY

NW 73 AV &186 ST	NW 183 ST & NW 57 AV	NW 183 ST & 27 AV	NW 183 ST & 7 AV	NE 183 ST & 2 CT	NE 185 ST & 18 AV	BUS TERMINAL AT AVENTURA MALL
05:05AM	05:10AM	05:20AM	05:27AM	05:31AM	05:38AM	05:48AM
05:20AM	05:25AM	05:35AM	05:42AM	05:46AM	05:53AM	06:03AM
05:33AM	05:38AM	05:48AM	05:55AM	06:00AM	06:08AM	06:18AM
05:46AM	05:51AM	06:02AM	06:10AM	06:15AM	06:23AM	06:33AM
05:58AM	06:06AM	06:17AM	06:25AM	06:30AM	06:38AM	06:48AM
06:09AM	06:17AM	06:28AM	06:36AM	06:41AM	06:49AM	07:03AM
06:22AM	06:30AM	06:41AM	06:49AM	06:54AM	07:04AM	07:18AM
06:36AM	06:44AM	06:55AM	07:03AM	07:09AM	07:19AM	07:33AM
06:47AM	06:55AM	07:10AM	07:18AM	07:24AM	07:34AM	07:48AM
07:00AM	07:10AM	07:25AM	07:33AM	07:39AM	07:49AM	08:03AM
07:15AM	07:25AM	07:40AM	07:48AM	07:54AM	08:04AM	08:18AM
07:30AM	07:40AM	07:55AM	08:03AM	08:09AM	08:19AM	08:33AM

07:45AM	07:55AM	08:10AM	08:18AM	08:24AM	08:34AM	08:48AM
08:04AM	08:14AM	08:29AM	08:37AM	08:43AM	08:53AM	09:08AM
08:25AM	08:35AM	08:50AM	08:58AM	09:04AM	09:13AM	09:28AM
08:44AM	08:54AM	09:09AM	09:18AM	09:24AM	09:33AM	09:48AM
09:06AM	09:15AM	09:29AM	09:38AM	09:44AM	09:53AM	10:08AM
09:26AM	09:35AM	09:49AM	09:58AM	10:04AM	10:13AM	10:28AM
09:46AM	09:55AM	10:09AM	10:18AM	10:24AM	10:33AM	10:48AM
10:06AM	10:15AM	10:29AM	10:38AM	10:44AM	10:53AM	11:08AM
10:26AM	10:35AM	10:49AM	10:58AM	11:04AM	11:13AM	11:28AM
10:46AM	10:55AM	11:09AM	11:18AM	11:24AM	11:33AM	11:48AM
11:06AM	11:15AM	11:29AM	11:38AM	11:44AM	11:53AM	12:08PM
11:26AM	11:35AM	11:49AM	11:58AM	12:04PM	12:13PM	12:28PM
11:46AM	11:55AM	12:09PM	12:18PM	12:24PM	12:33PM	12:48PM
12:06PM	12:15PM	12:29PM	12:38PM	12:44PM	12:53PM	01:08PM
12:26PM	12:35PM	12:49PM	12:58PM	01:04PM	01:13PM	01:28PM
12:46PM	12:55PM	01:09PM	01:18PM	01:24PM	01:33PM	01:48PM
01:06PM	01:15PM	01:29PM	01:38PM	01:44PM	01:53PM	02:08PM
01:26PM	01:35PM	01:49PM	01:58PM	02:04PM	02:13PM	02:28PM
01:46PM	01:55PM	02:09PM	02:18PM	02:24PM	02:33PM	02:48PM
01:59PM	02:08PM	02:22PM	02:31PM	02:37PM	02:46PM	03:03PM

02:14PM	02:23PM	02:37PM	02:46PM	02:52PM	03:01PM	03:18PM
02:30PM	02:39PM	02:53PM	03:02PM	03:07PM	03:16PM	03:33PM
02:44PM	02:53PM	03:08PM	03:17PM	03:22PM	03:31PM	03:48PM
02:58PM	03:08PM	03:23PM	03:32PM	03:37PM	03:46PM	04:03PM
03:13PM	03:23PM	03:38PM	03:47PM	03:52PM	04:01PM	04:18PM
03:28PM	03:38PM	03:53PM	04:02PM	04:07PM	04:16PM	04:33PM
03:43PM	03:53PM	04:08PM	04:17PM	04:22PM	04:31PM	04:48PM
03:58PM	04:08PM	04:23PM	04:32PM	04:37PM	04:46PM	05:03PM
04:13PM	04:23PM	04:38PM	04:47PM	04:52PM	05:01PM	05:18PM
04:28PM	04:38PM	04:53PM	05:02PM	05:07PM	05:16PM	05:33PM
04:43PM	04:53PM	05:08PM	05:17PM	05:22PM	05:31PM	05:48PM
04:58PM	05:08PM	05:23PM	05:32PM	05:37PM	05:46PM	06:03PM
05:13PM	05:23PM	05:38PM	05:47PM	05:52PM	06:01PM	06:18PM
05:28PM	05:38PM	05:53PM	06:02PM	06:07PM	06:16PM	06:33PM
05:47PM	05:57PM	06:12PM	06:21PM	06:26PM	06:35PM	06:48PM
06:03PM	06:13PM	06:28PM	06:37PM	06:42PM	06:50PM	07:03PM
06:21PM	06:31PM	06:44PM	06:52PM	06:57PM	07:05PM	07:18PM
06:53PM	07:01PM	07:14PM	07:22PM	07:27PM	07:35PM	07:48PM
07:23PM	07:31PM	07:44PM	07:52PM	07:57PM	08:05PM	08:18PM
07:56PM	08:04PM	08:17PM	08:25PM	08:30PM	08:36PM	08:48PM

08:31PM	08:37PM	08:48PM	08:55PM	09:00PM	09:06PM	09:18PM
09:01PM	09:07PM	09:18PM	09:25PM	09:30PM	09:36PM	09:48PM
09:31PM	09:37PM	09:48PM	09:55PM	10:00PM	10:06PM	10:18PM
10:01PM	10:07PM	10:18PM	10:25PM	10:30PM	10:36PM	10:48PM
10:31PM	10:37PM	10:48PM	10:55PM	11:00PM	11:06PM	11:18PM

Back to previous page

TRANSPORTATION & PUBLIC WORKS

Alice N. Bravo, P.E., Director

Overtown Transit Village North

701 NW 1st Court, Suite 1700, Miami, FL 33136

786-469-5675 |

Contact Us | About Us

Employees Calendar Translate

Hurricane season runs through Nov. 30. Check out the **Hurricane Guide** to make sure you're ready for the next storm.

Menu MIAMI-DADE COUNTY Login

miamidade.GOV METROBUS

183 (Westbound) WEEKDAY

BUS TERMINAL AT AVENTURA MALL	NE 185 ST & NE 19 AV	NE 183 ST & 2 AV	NW 183 ST & 7 AV	NW 183 ST & 27 AV	NW 183 ST & NW 55 AV	NW 73 AV &186 ST
05:00AM	05:09AM	05:16AM	05:20AM	05:27AM	05:37AM	05:46AM
05:15AM	05:24AM	05:31AM	05:35AM	05:42AM	05:52AM	06:01AM
05:30AM	05:39AM	05:46AM	05:50AM	05:57AM	06:10AM	06:19AM
05:45AM	05:54AM	06:03AM	06:08AM	06:17AM	06:30AM	06:39AM
06:00AM	06:11AM	06:20AM	06:25AM	06:34AM	06:47AM	06:56AM
06:15AM	06:26AM	06:35AM	06:40AM	06:49AM	07:02AM	07:12AM
06:30AM	06:41AM	06:50AM	06:55AM	07:04AM	07:17AM	07:27AM
06:45AM	06:56AM	07:06AM	07:11AM	07:20AM	07:33AM	07:43AM
07:00AM	07:12AM	07:22AM	07:27AM	07:36AM	07:49AM	07:59AM
07:15AM	07:27AM	07:37AM	07:42AM	07:51AM	08:04AM	08:14AM
07:30AM	07:42AM	07:52AM	07:57AM	08:06AM	08:19AM	08:29AM
07:45AM	07:57AM	08:07AM	08:12AM	08:21AM	08:34AM	08:44AM

08:00AM	08:12AM	08:22AM	08:27AM	08:36AM	08:49AM	08:59AM
08:15AM	08:27AM	08:37AM	08:42AM	08:51AM	09:04AM	09:14AM
08:30AM	08:42AM	08:52AM	08:57AM	09:06AM	09:19AM	09:29AM
08:45AM	08:57AM	09:07AM	09:13AM	09:21AM	09:34AM	09:44AM
09:00AM	09:15AM	09:24AM	09:30AM	09:38AM	09:51AM	10:01AM
09:20AM	09:35AM	09:44AM	09:50AM	09:58AM	10:11AM	10:21AM
09:40AM	09:55AM	10:04AM	10:10AM	10:18AM	10:31AM	10:41AM
10:00AM	10:15AM	10:24AM	10:30AM	10:38AM	10:51AM	11:01AM
10:20AM	10:35AM	10:44AM	10:50AM	10:58AM	11:11AM	11:21AM
10:40AM	10:55AM	11:04AM	11:10AM	11:18AM	11:31AM	11:41AM
11:00AM	11:15AM	11:24AM	11:30AM	11:38AM	11:51AM	12:01PM
11:20AM	11:35AM	11:44AM	11:50AM	11:58AM	12:11PM	12:21PM
11:40AM	11:55AM	12:04PM	12:10PM	12:18PM	12:31PM	12:41PM
12:00PM	12:15PM	12:24PM	12:30PM	12:38PM	12:51PM	01:01PM
12:20PM	12:35PM	12:44PM	12:50PM	12:58PM	01:11PM	01:21PM
12:40PM	12:55PM	01:04PM	01:10PM	01:18PM	01:31PM	01:41PM
01:00PM	01:15PM	01:24PM	01:30PM	01:38PM	01:51PM	02:01PM
01:20PM	01:35PM	01:44PM	01:50PM	01:58PM	02:11PM	02:21PM
01:40PM	01:55PM	02:04PM	02:10PM	02:18PM	02:31PM	02:41PM
02:00PM	02:15PM	02:24PM	02:30PM	02:38PM	02:51PM	03:01PM

02:20PM	02:35PM	02:44PM	02:50PM	02:58PM	03:12PM	03:22PM
02:40PM	02:55PM	03:08PM	03:14PM	03:23PM	03:37PM	03:47PM
03:00PM	03:18PM	03:31PM	03:37PM	03:46PM	04:00PM	04:10PM
03:15PM	03:33PM	03:46PM	03:52PM	04:01PM	04:15PM	04:25PM
03:30PM	03:48PM	04:01PM	04:07PM	04:16PM	04:30PM	04:40PM
03:45PM	04:03PM	04:16PM	04:22PM	04:31PM	04:45PM	04:55PM
04:00PM	04:18PM	04:31PM	04:37PM	04:46PM	05:00PM	05:10PM
04:15PM	04:33PM	04:46PM	04:52PM	05:01PM	05:15PM	05:25PM
04:30PM	04:48PM	05:01PM	05:07PM	05:16PM	05:30PM	05:40PM
04:45PM	05:03PM	05:16PM	05:22PM	05:31PM	05:45PM	05:55PM
05:00PM	05:18PM	05:31PM	05:37PM	05:46PM	06:00PM	06:10PM
05:15PM	05:33PM	05:46PM	05:52PM	06:01PM	06:15PM	06:25PM
05:30PM	05:48PM	06:01PM	06:07PM	06:16PM	06:30PM	06:39PM
05:45PM	06:03PM	06:16PM	06:22PM	06:31PM	06:42PM	06:51PM
06:00PM	06:18PM	06:31PM	06:36PM	06:44PM	06:55PM	07:04PM
06:15PM	06:33PM	06:41PM	06:46PM	06:54PM	07:05PM	07:14PM
06:30PM	06:43PM	06:51PM	06:56PM	07:04PM	07:15PM	07:24PM
06:45PM	06:58PM	07:06PM	07:11PM	07:19PM	07:30PM	07:39PM
07:00PM	07:13PM	07:21PM	07:26PM	07:34PM	07:45PM	07:54PM
07:15PM	07:28PM	07:36PM	07:41PM	07:49PM	08:00PM	08:09PM

07:30PM	07:43PM	07:51PM	07:56PM	08:04PM	08:15PM	08:24PM
08:00PM	08:13PM	08:21PM	08:26PM	08:34PM	08:44PM	08:53PM
08:30PM	08:42PM	08:49PM	08:54PM	09:01PM	09:11PM	09:20PM
09:00PM	09:12PM	09:19PM	09:24PM	09:31PM	09:41PM	09:50PM
09:30PM	09:42PM	09:49PM	09:54PM	10:01PM	10:11PM	10:20PM
10:00PM	10:12PM	10:19PM	10:24PM	10:31PM	10:41PM	10:50PM
10:30PM	10:42PM	10:49PM	10:54PM	11:01PM	11:11PM	11:20PM

Back to previous page

TRANSPORTATION & PUBLIC WORKS

Alice N. Bravo, P.E., Director

Overtown Transit Village North

701 NW 1st Court, Suite 1700, Miami, FL 33136

786-469-5675 |

Contact Us | About Us

Route 267
Ludlam Limited

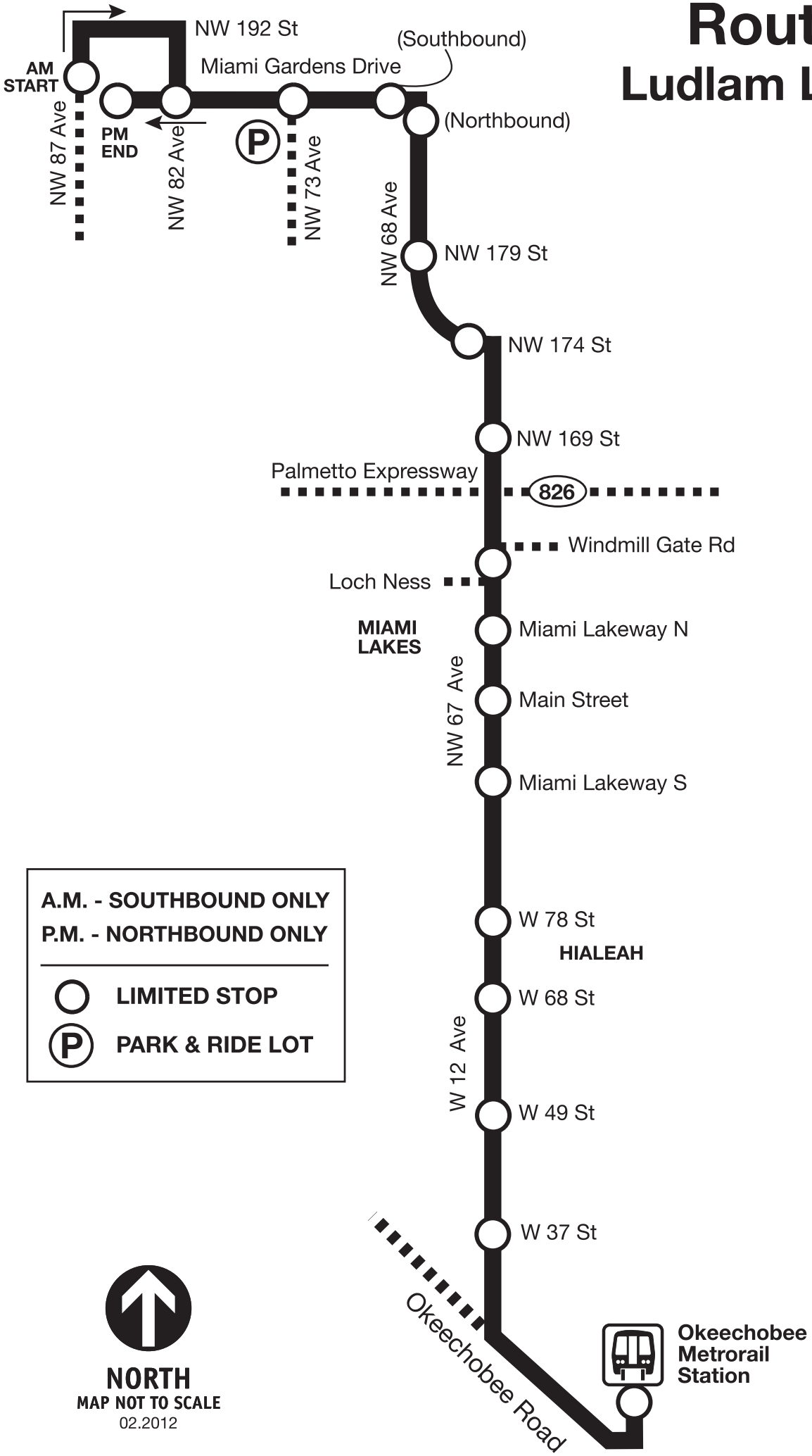

Employees Calendar Translate

Hurricane season runs through Nov. 30. Check out the **Hurricane Guide** to make sure you're ready for the next storm.

Menu MIAMI-DADE COUNTY Login

miamidade.gov METROBUS

267 (Northbound) WEEKDAY

OKEECHOBEE METRORAIL STATION	W 12 AV & 48 ST	NW 67 AV & MAIN ST	NW 67 AV & 169 ST	NW 186 ST & 73 AV	NW 186 ST & 87 AV
03:30PM	03:39PM	03:51PM	03:59PM	04:05PM	04:13PM
03:55PM	04:04PM	04:16PM	04:24PM	04:30PM	04:38PM
04:20PM	04:29PM	04:41PM	04:49PM	04:55PM	05:03PM
04:45PM	04:54PM	05:07PM	05:15PM	05:21PM	05:29PM
05:10PM	05:20PM	05:33PM	05:41PM	05:47PM	05:55PM
05:35PM	05:45PM	05:58PM	06:06PM	06:12PM	06:20PM
06:05PM	06:15PM	06:28PM	06:36PM	06:42PM	06:50PM
06:30PM	06:40PM	06:53PM	07:01PM	07:07PM	07:15PM

Back to previous page

TRANSPORTATION & PUBLIC WORKS

Alice N. Bravo, P.E., Director

Overtown Transit Village North

701 NW 1st Court, Suite 1700, Miami, FL 33136

786-469-5675 |

Contact Us | About Us

Help and Support

Miami-Dade Home

Privacy Statement

ADA Notice

Disclaimer

About Miami-Dade

Self-Service

311 Contact Center

Employees Calendar Translate

Hurricane season runs through Nov. 30. Check out the **Hurricane Guide** to make sure you're ready for the next storm.

Menu Login

267 (Southbound) WEEKDAY

NW 87 AV & NW 189 ST	NW 186 ST & 73 AV	NW 67 AV & MAIN ST	W 12 AV & 49 ST HIALEAH	OKEECHOBEE METRORAIL STATION
06:00AM	06:06AM	06:17AM	06:28AM	06:37AM
06:20AM	06:26AM	06:37AM	06:48AM	06:57AM
06:45AM	06:51AM	07:03AM	07:15AM	07:27AM
07:10AM	07:17AM	07:29AM	07:41AM	07:53AM
07:35AM	07:42AM	07:54AM	08:06AM	08:18AM
08:00AM	08:07AM	08:19AM	08:31AM	08:43AM
08:25AM	08:32AM	08:44AM	08:56AM	09:08AM

Back to previous page

TRANSPORTATION & PUBLIC WORKS

Alice N. Bravo, P.E., Director

Overtown Transit Village North

701 NW 1st Court, Suite 1700, Miami, FL 33136

786-469-5675 |

Contact Us | About Us

Help and Support

Miami-Dade Home

Privacy Statement

ADA Notice

Disclaimer

About Miami-Dade

Self-Service

311 Contact Center

Route 286

North Pointe Circulator

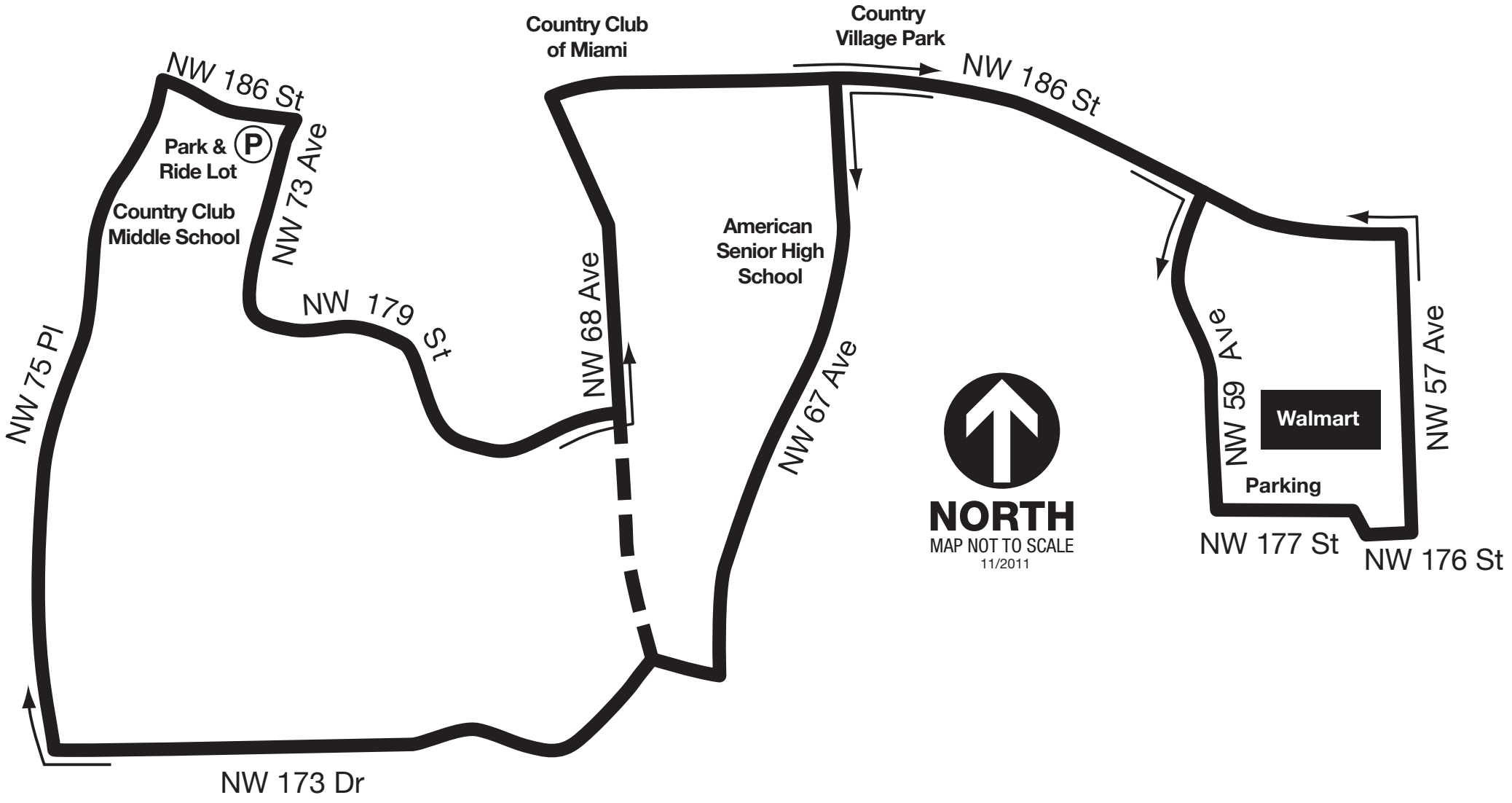

Employees Calendar Translate

Hurricane season runs through Nov. 30. Check out the **Hurricane Guide** to make sure you're ready for the next storm.

Menu MIAMI-DADE COUNTY Login

miamidade.GOV METROBUS

286 (Loop) WEEKDAY

NW 177 ST & 59 AV	NW 183 ST & 57 AV	NW 67 AV & 174 ST	NW 73 AV &186 ST	NW 68 AV & 186 ST	NW 177 ST & 59 AV
08:24AM	08:29AM	08:36AM	08:44AM	08:50AM	08:56AM
09:12AM	09:18AM	09:25AM	09:33AM	09:39AM	09:45AM
10:00AM	10:06AM	10:13AM	10:21AM	10:27AM	10:33AM
10:48AM	10:54AM	11:01AM	11:09AM	11:15AM	11:21AM
11:36AM	11:42AM	11:49AM	11:57AM	12:03PM	12:09PM
12:24PM	12:30PM	12:37PM	12:45PM	12:51PM	12:57PM
01:24PM	01:30PM	01:37PM	01:45PM	01:51PM	01:57PM
02:12PM	02:18PM	02:25PM	02:33PM	02:39PM	02:45PM
03:00PM	03:06PM	03:13PM	03:21PM	03:27PM	03:33PM
03:48PM	03:54PM	04:01PM	04:09PM	04:15PM	04:21PM
04:36PM	04:42PM	04:49PM	04:57PM	05:03PM	05:09PM

Back to previous page

TRANSPORTATION & PUBLIC WORKS

Alice N. Bravo, P.E., Director

Overtown Transit Village North

701 NW 1st Court, Suite 1700, Miami, FL 33136

786-469-5675 |

Contact Us | About Us

Help and Support

Miami-Dade Home

Privacy Statement

ADA Notice

Disclaimer

About Miami-Dade

Self-Service

APPENDIX E

Synchro Output Sheets

- Existing (2016)
- No Build 2020
- No Build 2040
- Build 2020
- Build 2040

Existing (2016)

Movement	EBL	EBT	EBR	WBL	WBT	WBR	NBL	NBT	NBR	SBL	SBT	SBR
Lane Configurations												
Traffic Volume (veh/h)	288	470	420	193	1936	38	721	359	132	92	299	560
Future Volume (veh/h)	288	470	420	193	1936	38	721	359	132	92	299	560
Number	1	6	16	5	2	12	7	4	14	3	8	18
Initial Q (Qb), veh	0	0	0	0	0	0	0	0	0	0	0	0
Ped-Bike Adj(A_pbT)	1.00		1.00	1.00		1.00	1.00		1.00	1.00		1.00
Parking Bus, Adj	1.00	1.00	1.00	1.00	1.00	1.00	1.00	1.00	1.00	1.00	1.00	1.00
Adj Sat Flow, veh/h/ln	1863	1863	1863	1863	1863	1900	1863	1863	1900	1863	1863	1900
Adj Flow Rate, veh/h	313	511	457	203	2038	40	775	386	142	100	325	609
Adj No. of Lanes	2	2	1	1	3	0	1	2	0	1	2	0
Peak Hour Factor	0.92	0.92	0.92	0.95	0.95	0.95	0.93	0.93	0.93	0.92	0.92	0.92
Percent Heavy Veh, %	2	2	2	2	2	2	2	2	2	2	2	2
Cap, veh/h	249	1298	924	338	1940	38	424	888	323	305	334	299
Arrive On Green	0.07	0.37	0.37	0.08	0.38	0.38	0.22	0.35	0.35	0.06	0.19	0.19
Sat Flow, veh/h	3442	3539	1583	1774	5135	101	1774	2545	924	1774	1770	1583
Grp Volume(v), veh/h	313	511	457	203	1345	733	775	267	261	100	325	609
Grp Sat Flow(s),veh/h/ln	1721	1770	1583	1774	1695	1845	1774	1770	1700	1774	1770	1583
Q Serve(g_s), s	13.0	19.2	30.4	12.8	68.0	68.0	39.0	20.8	21.3	8.1	32.8	34.0
Cycle Q Clear(g_c), s	13.0	19.2	30.4	12.8	68.0	68.0	39.0	20.8	21.3	8.1	32.8	34.0
Prop In Lane	1.00		1.00	1.00		0.05	1.00		0.54	1.00		1.00
Lane Grp Cap(c), veh/h	249	1298	924	338	1281	697	424	618	593	305	334	299
V/C Ratio(X)	1.26	0.39	0.49	0.60	1.05	1.05	1.83	0.43	0.44	0.33	0.97	2.04
Avail Cap(c_a), veh/h	249	1298	924	417	1281	697	424	618	593	372	334	299
HCM Platoon Ratio	1.00	1.00	1.00	1.00	1.00	1.00	1.00	1.00	1.00	1.00	1.00	1.00
Upstream Filter(I)	1.00	1.00	1.00	1.00	1.00	1.00	1.00	1.00	1.00	1.00	1.00	1.00
Uniform Delay (d), s/veh	83.5	42.2	21.9	32.3	56.0	56.0	58.8	44.9	45.1	54.3	72.5	73.0
Incr Delay (d2), s/veh	145.0	0.1	0.2	0.6	39.4	48.5	380.9	2.2	2.4	0.2	42.7	477.9
Initial Q Delay(d3),s/veh	0.0	0.0	0.0	0.0	0.0	0.0	0.0	0.0	0.0	0.0	0.0	0.0
%ile BackOfQ(50%),veh/ln	11.2	9.5	13.4	6.3	38.8	44.1	66.0	10.5	10.4	4.0	20.0	54.6
LnGrp Delay(d),s/veh	228.5	42.2	22.1	33.0	95.4	104.5	439.7	47.1	47.4	54.5	115.2	550.9
LnGrp LOS	F	D	C	C	F	F	F	D	D	D	F	F
Approach Vol, veh/h		1281			2281			1303			1034	
Approach Delay, s/veh		80.6			92.8			280.7			365.9	
Approach LOS		F			F			F			F	

Timer	1	2	3	4	5	6	7	8
Assigned Phs	1	2	3	4	5	6	7	8
Phs Duration (G+Y+Rc), s	19.0	74.0	17.2	69.8	21.0	72.0	46.0	41.0
Change Period (Y+Rc), s	6.0	6.0	7.0	7.0	6.0	6.0	7.0	7.0
Max Green Setting (Gmax), s	13.0	68.0	17.0	56.0	23.0	58.0	39.0	34.0
Max Q Clear Time (g_c+I1), s	15.0	70.0	10.1	23.3	14.8	32.4	41.0	36.0
Green Ext Time (p_c), s	0.0	0.0	0.1	2.9	0.2	1.3	0.0	0.0

Intersection Summary	
HCM 2010 Ctrl Delay	179.5
HCM 2010 LOS	F

Intersection	
Int Delay, s/veh	2.3

Movement	EBL	EBT	WBT	WBR	SBL	SBR
Lane Configurations						
Traffic Vol, veh/h	0	0	2075	19	0	92
Future Vol, veh/h	0	0	2075	19	0	92
Conflicting Peds, #/hr	0	0	0	0	0	0
Sign Control	Free	Free	Free	Free	Stop	Stop
RT Channelized	-	None	-	None	-	None
Storage Length	100	-	-	50	0	-
Veh in Median Storage, #	-	0	0	-	0	-
Grade, %	-	0	0	-	0	-
Peak Hour Factor	92	92	92	92	92	92
Heavy Vehicles, %	2	2	2	2	2	2
Mvmt Flow	0	0	2255	21	0	100

Major/Minor	Major1		Major2		Minor2	
Conflicting Flow All	2276	0	-	0	2266	1138
Stage 1	-	-	-	-	2266	-
Stage 2	-	-	-	-	0	-
Critical Hdwy	5.34	-	-	-	6.29	7.14
Critical Hdwy Stg 1	-	-	-	-	6.64	-
Critical Hdwy Stg 2	-	-	-	-	5.84	-
Follow-up Hdwy	3.12	-	-	-	3.67	3.92
Pot Cap-1 Maneuver	90	-	-	-	48	168
Stage 1	-	-	-	-	39	-
Stage 2	-	-	-	-	-	-
Platoon blocked, %		-	-	-		
Mov Cap-1 Maneuver	90	-	-	-	48	168
Mov Cap-2 Maneuver	-	-	-	-	48	-
Stage 1	-	-	-	-	39	-
Stage 2	-	-	-	-	-	-

Approach	EB	WB	SB
HCM Control Delay, s	0	0	53.8
HCM LOS			F

Minor Lane/Major Mvmt	EBL	EBT	WBT	WBR	SBLn1
Capacity (veh/h)	90	-	-	-	168
HCM Lane V/C Ratio	-	-	-	-	0.595
HCM Control Delay (s)	0	-	-	-	53.8
HCM Lane LOS	A	-	-	-	F
HCM 95th %tile Q(veh)	0	-	-	-	3.2

Intersection	
Int Delay, s/veh	22.2

Movement	EBT	EBR	WBL	WBT	NBL	NBR
Lane Configurations						
Traffic Vol, veh/h	712	0	0	1969	114	56
Future Vol, veh/h	712	0	0	1969	114	56
Conflicting Peds, #/hr	0	0	0	0	0	0
Sign Control	Free	Free	Free	Free	Stop	Stop
RT Channelized	-	None	-	None	-	None
Storage Length	-	-	-	-	0	50
Veh in Median Storage, #	0	-	-	0	0	-
Grade, %	0	-	-	0	0	-
Peak Hour Factor	92	92	92	92	92	92
Heavy Vehicles, %	2	2	2	2	2	2
Mvmt Flow	774	0	0	2140	124	61

Major/Minor	Major1		Major2		Minor1	
Conflicting Flow All	0	-	-	-	1844	387
Stage 1	-	-	-	-	774	-
Stage 2	-	-	-	-	1070	-
Critical Hdwy	-	-	-	-	6.84	6.94
Critical Hdwy Stg 1	-	-	-	-	5.84	-
Critical Hdwy Stg 2	-	-	-	-	5.84	-
Follow-up Hdwy	-	-	-	-	3.52	3.32
Pot Cap-1 Maneuver	-	0	0	-	~ 66	611
Stage 1	-	0	0	-	415	-
Stage 2	-	0	0	-	291	-
Platoon blocked, %	-			-		
Mov Cap-1 Maneuver	-	-	-	-	~ 66	611
Mov Cap-2 Maneuver	-	-	-	-	~ 66	-
Stage 1	-	-	-	-	415	-
Stage 2	-	-	-	-	291	-

Approach	EB	WB	NB
HCM Control Delay, s	0	0	$ 371.7
HCM LOS			F

Minor Lane/Major Mvmt	NBLn1	NBLn2	EBT	WBT
Capacity (veh/h)	66	611	-	-
HCM Lane V/C Ratio	1.877	0.1	-	-
HCM Control Delay (s)	$ 548.6	11.5	-	-
HCM Lane LOS	F	B	-	-
HCM 95th %tile Q(veh)	11.3	0.3	-	-

Notes			
~: Volume exceeds capacity	$: Delay exceeds 300s	+: Computation Not Defined	*: All major volume in platoon

Intersection	
Int Delay, s/veh	0.1

Movement	EBL	EBT	WBT	WBR	SBL	SBR
Lane Configurations						
Traffic Vol, veh/h	0	768	1956	2	0	13
Future Vol, veh/h	0	768	1956	2	0	13
Conflicting Peds, #/hr	0	0	0	0	0	0
Sign Control	Free	Free	Free	Free	Stop	Stop
RT Channelized	-	None	-	None	-	None
Storage Length	-	-	-	-	-	0
Veh in Median Storage, #	-	0	0	-	0	-
Grade, %	-	0	0	-	0	-
Peak Hour Factor	92	92	92	92	92	92
Heavy Vehicles, %	2	2	2	2	2	2
Mvmt Flow	0	835	2126	2	0	14

Major/Minor	Major1		Major2		Minor2	
Conflicting Flow All	-	0	-	0	-	1064
Stage 1	-	-	-	-	-	-
Stage 2	-	-	-	-	-	-
Critical Hdwy	-	-	-	-	-	6.94
Critical Hdwy Stg 1	-	-	-	-	-	-
Critical Hdwy Stg 2	-	-	-	-	-	-
Follow-up Hdwy	-	-	-	-	-	3.32
Pot Cap-1 Maneuver	0	-	-	-	0	219
Stage 1	0	-	-	-	0	-
Stage 2	0	-	-	-	0	-
Platoon blocked, %		-	-	-		
Mov Cap-1 Maneuver	-	-	-	-	-	219
Mov Cap-2 Maneuver	-	-	-	-	-	-
Stage 1	-	-	-	-	-	-
Stage 2	-	-	-	-	-	-

Approach	EB	WB	SB
HCM Control Delay, s	0	0	22.6
HCM LOS			C

Minor Lane/Major Mvmt	EBT	WBT	WBR	SBLn1
Capacity (veh/h)	-	-	-	219
HCM Lane V/C Ratio	-	-	-	0.065
HCM Control Delay (s)	-	-	-	22.6
HCM Lane LOS	-	-	-	C
HCM 95th %tile Q(veh)	-	-	-	0.2

Movement	EBL	EBT	EBR	WBL	WBT	WBR	NBL	NBT	NBR	SBL	SBT	SBR
Lane Configurations												
Traffic Volume (veh/h)	109	544	115	220	1482	139	294	79	101	130	198	182
Future Volume (veh/h)	109	544	115	220	1482	139	294	79	101	130	198	182
Number	1	6	16	5	2	12	7	4	14	3	8	18
Initial Q (Qb), veh	0	0	0	0	0	0	0	0	0	0	0	0
Ped-Bike Adj(A_pbT)	1.00		1.00	1.00		1.00	1.00		1.00	1.00		1.00
Parking Bus, Adj	1.00	1.00	1.00	1.00	1.00	1.00	1.00	1.00	1.00	1.00	1.00	1.00
Adj Sat Flow, veh/h/ln	1863	1863	1900	1863	1863	1900	1863	1863	1863	1863	1863	1863
Adj Flow Rate, veh/h	122	611	129	244	1647	154	368	99	126	157	239	219
Adj No. of Lanes	1	2	0	1	2	0	1	1	1	1	1	1
Peak Hour Factor	0.89	0.89	0.89	0.90	0.90	0.90	0.80	0.80	0.80	0.83	0.83	0.83
Percent Heavy Veh, %	2	2	2	2	2	2	2	2	2	2	2	2
Cap, veh/h	144	1429	301	409	1629	151	407	474	403	385	292	248
Arrive On Green	0.05	0.49	0.49	0.06	0.50	0.50	0.19	0.25	0.25	0.09	0.16	0.16
Sat Flow, veh/h	1774	2911	613	1774	3276	303	1774	1863	1583	1774	1863	1583
Grp Volume(v), veh/h	122	371	369	244	881	920	368	99	126	157	239	219
Grp Sat Flow(s),veh/h/ln	1774	1770	1755	1774	1770	1809	1774	1863	1583	1774	1863	1583
Q Serve(g_s), s	6.1	20.2	20.3	9.0	74.6	74.6	25.3	6.3	9.7	11.0	18.6	20.3
Cycle Q Clear(g_c), s	6.1	20.2	20.3	9.0	74.6	74.6	25.3	6.3	9.7	11.0	18.6	20.3
Prop In Lane	1.00		0.35	1.00		0.17	1.00		1.00	1.00		1.00
Lane Grp Cap(c), veh/h	144	869	862	409	880	900	407	474	403	385	292	248
V/C Ratio(X)	0.85	0.43	0.43	0.60	1.00	1.02	0.90	0.21	0.31	0.41	0.82	0.88
Avail Cap(c_a), veh/h	154	869	862	409	880	900	587	474	403	737	397	338
HCM Platoon Ratio	1.00	1.00	1.00	1.00	1.00	1.00	1.00	1.00	1.00	1.00	1.00	1.00
Upstream Filter(I)	1.00	1.00	1.00	0.09	0.09	0.09	1.00	1.00	1.00	1.00	1.00	1.00
Uniform Delay (d), s/veh	42.0	24.6	24.6	22.0	37.7	37.7	41.3	44.0	45.3	46.9	61.2	61.9
Incr Delay (d2), s/veh	30.1	1.5	1.6	0.2	9.4	15.5	10.5	0.2	0.3	0.3	8.3	16.8
Initial Q Delay(d3),s/veh	0.0	0.0	0.0	0.0	0.0	0.0	0.0	0.0	0.0	0.0	0.0	0.0
%ile BackOfQ(50%),veh/ln	6.2	10.3	10.2	3.2	38.7	41.1	13.6	3.3	4.3	5.4	10.2	10.1
LnGrp Delay(d),s/veh	72.0	26.1	26.2	22.2	47.1	53.2	51.7	44.2	45.6	47.2	69.4	78.6
LnGrp LOS	E	C	C	C	F	F	D	D	D	D	E	E
Approach Vol, veh/h		862			2045			593			615	
Approach Delay, s/veh		32.6			46.9			49.2			67.0	
Approach LOS		C			D			D			E	

Timer	1	2	3	4	5	6	7	8
Assigned Phs	1	2	3	4	5	6	7	8
Phs Duration (G+Y+Rc), s	11.1	79.6	16.2	43.2	12.0	78.7	30.8	28.5
Change Period (Y+Rc), s	3.0	5.0	3.0	5.0	3.0	5.0	3.0	5.0
Max Green Setting (Gmax), s	9.0	50.0	43.0	32.0	9.0	50.0	43.0	32.0
Max Q Clear Time (g_c+I1), s	8.1	76.6	13.0	11.7	11.0	22.3	27.3	22.3
Green Ext Time (p_c), s	0.0	0.0	0.2	0.7	0.0	1.4	0.5	1.2

Intersection Summary	
HCM 2010 Ctrl Delay	47.3
HCM 2010 LOS	D

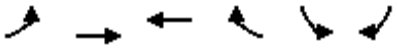

Movement	EBL	EBT	WBT	WBR	SBL	SBR
Lane Configurations						
Traffic Volume (veh/h)	105	670	1644	363	357	233
Future Volume (veh/h)	105	670	1644	363	357	233
Number	1	6	2	12	3	18
Initial Q (Qb), veh	0	0	0	0	0	0
Ped-Bike Adj(A_pbT)	1.00			1.00	1.00	1.00
Parking Bus, Adj	1.00	1.00	1.00	1.00	1.00	1.00
Adj Sat Flow, veh/h/ln	1863	1863	1863	1900	1863	1863
Adj Flow Rate, veh/h	121	770	1847	408	372	243
Adj No. of Lanes	1	2	2	0	1	1
Peak Hour Factor	0.87	0.87	0.89	0.89	0.96	0.96
Percent Heavy Veh, %	2	2	2	2	2	2
Cap, veh/h	143	2499	1839	392	403	444
Arrive On Green	0.07	0.94	1.00	1.00	0.23	0.23
Sat Flow, veh/h	1774	3632	2998	619	1774	1583
Grp Volume(v), veh/h	121	770	1099	1156	372	243
Grp Sat Flow(s),veh/h/ln	1774	1770	1770	1754	1774	1583
Q Serve(g_s), s	5.9	2.8	0.0	95.0	30.8	19.6
Cycle Q Clear(g_c), s	5.9	2.8	0.0	95.0	30.8	19.6
Prop In Lane	1.00			0.35	1.00	1.00
Lane Grp Cap(c), veh/h	143	2499	1120	1110	403	444
V/C Ratio(X)	0.84	0.31	0.98	1.04	0.92	0.55
Avail Cap(c_a), veh/h	203	2499	1120	1110	556	580
HCM Platoon Ratio	1.33	1.33	2.00	2.00	1.00	1.00
Upstream Filter(I)	0.86	0.86	1.00	1.00	1.00	1.00
Uniform Delay (d), s/veh	49.1	1.4	0.0	0.0	56.7	45.9
Incr Delay (d2), s/veh	15.4	0.3	22.6	38.5	16.2	0.8
Initial Q Delay(d3),s/veh	0.0	0.0	0.0	0.0	0.0	0.0
%ile BackOfQ(50%),veh/ln	5.5	1.3	7.0	11.9	16.9	8.7
LnGrp Delay(d),s/veh	64.4	1.7	22.6	38.5	72.8	46.7
LnGrp LOS	E	A	C	F	E	D
Approach Vol, veh/h		891	2255		615	
Approach Delay, s/veh		10.2	30.7		62.5	
Approach LOS		B	C		E	

Timer	1	2	3	4	5	6	7	8
Assigned Phs	1	2				6		8
Phs Duration (G+Y+Rc), s	10.9	100.0				110.9		39.1
Change Period (Y+Rc), s	3.0	5.0				5.0		5.0
Max Green Setting (Gmax), s	13.0	77.0				93.0		47.0
Max Q Clear Time (g_c+I1), s	7.9	97.0				4.8		32.8
Green Ext Time (p_c), s	0.1	0.0				1.9		1.3

Intersection Summary	
HCM 2010 Ctrl Delay	31.1
HCM 2010 LOS	C

Intersection	
Int Delay, s/veh	13.1

Movement	EBL	EBT	WBT	WBR	SBL	SBR
Lane Configurations						
Traffic Vol, veh/h	35	991	1855	6	9	152
Future Vol, veh/h	35	991	1855	6	9	152
Conflicting Peds, #/hr	0	0	0	0	0	0
Sign Control	Free	Free	Free	Free	Stop	Stop
RT Channelized	-	None	-	None	-	None
Storage Length	100	-	-	-	0	-
Veh in Median Storage, #	-	0	0	-	0	-
Grade, %	-	0	0	-	0	-
Peak Hour Factor	92	92	92	92	92	92
Heavy Vehicles, %	2	2	2	2	2	2
Mvmt Flow	38	1077	2016	7	10	165

Major/Minor	Major1		Major2		Minor2	
Conflicting Flow All	2023	0	-	0	2635	1012
Stage 1	-	-	-	-	2020	-
Stage 2	-	-	-	-	615	-
Critical Hdwy	4.14	-	-	-	6.84	6.94
Critical Hdwy Stg 1	-	-	-	-	5.84	-
Critical Hdwy Stg 2	-	-	-	-	5.84	-
Follow-up Hdwy	2.22	-	-	-	3.52	3.32
Pot Cap-1 Maneuver	277	-	-	-	19	237
Stage 1	-	-	-	-	89	-
Stage 2	-	-	-	-	502	-
Platoon blocked, %			-	-	-	
Mov Cap-1 Maneuver	277	-	-	-	16	237
Mov Cap-2 Maneuver	-	-	-	-	16	-
Stage 1	-	-	-	-	77	-
Stage 2	-	-	-	-	502	-

Approach	EB	WB	SB
HCM Control Delay, s	0.7	0	244
HCM LOS			F

Minor Lane/Major Mvmt	EBL	EBT	WBT	WBR	SBLn1
Capacity (veh/h)	277	-	-	-	134
HCM Lane V/C Ratio	0.137	-	-	-	1.306
HCM Control Delay (s)	20.1	-	-	-	244
HCM Lane LOS	C	-	-	-	F
HCM 95th %tile Q(veh)	0.5	-	-	-	11.1

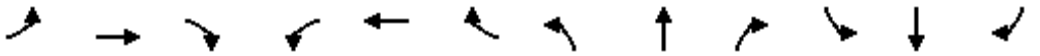

Movement	EBL	EBT	EBR	WBL	WBT	WBR	NBL	NBT	NBR	SBL	SBT	SBR
Lane Configurations												
Traffic Volume (vph)	37	918	45	11	1712	24	115	5	23	49	24	36
Future Volume (vph)	37	918	45	11	1712	24	115	5	23	49	24	36
Ideal Flow (vphpl)	1900	1900	1900	1900	1900	1900	1900	1900	1900	1900	1900	1900
Total Lost time (s)	5.0	5.0		5.0	5.0			6.0	6.0		6.0	6.0
Lane Util. Factor	1.00	0.95		1.00	0.95			1.00	1.00		1.00	1.00
Frt	1.00	0.99		1.00	1.00			1.00	0.85		1.00	0.85
Flt Protected	0.95	1.00		0.95	1.00			0.95	1.00		0.97	1.00
Satd. Flow (prot)	1770	3514		1770	3532			1777	1583		1802	1583
Flt Permitted	0.07	1.00		0.22	1.00			0.95	1.00		0.97	1.00
Satd. Flow (perm)	132	3514		414	3532			1777	1583		1802	1583
Peak-hour factor, PHF	0.88	0.88	0.88	0.95	0.95	0.95	0.77	0.77	0.77	0.55	0.55	0.55
Adj. Flow (vph)	42	1043	51	12	1802	25	149	6	30	89	44	65
RTOR Reduction (vph)	0	2	0	0	1	0	0	0	28	0	0	52
Lane Group Flow (vph)	42	1092	0	12	1826	0	0	155	2	0	133	13
Turn Type	Perm	NA		Perm	NA		Split	NA	Perm	Split	NA	Perm
Protected Phases		6			2		4	4		3	3	
Permitted Phases	6			2					4			3
Actuated Green, G (s)	106.0	106.0		106.0	106.0			12.3	12.3		14.7	14.7
Effective Green, g (s)	106.0	106.0		106.0	106.0			12.3	12.3		14.7	14.7
Actuated g/C Ratio	0.71	0.71		0.71	0.71			0.08	0.08		0.10	0.10
Clearance Time (s)	5.0	5.0		5.0	5.0			6.0	6.0		6.0	6.0
Vehicle Extension (s)	1.0	1.0		1.0	1.0			2.5	2.5		2.5	2.5
Lane Grp Cap (vph)	93	2483		292	2495			145	129		176	155
v/s Ratio Prot		0.31			c0.52			c0.09			c0.07	
v/s Ratio Perm	0.32			0.03					0.00			0.01
v/c Ratio	0.45	0.44		0.04	0.73			1.07	0.02		0.76	0.08
Uniform Delay, d1	9.5	9.4		6.6	13.4			68.8	63.3		65.9	61.5
Progression Factor	1.37	1.31		0.39	0.57			1.00	1.00		1.00	1.00
Incremental Delay, d2	14.0	0.5		0.2	1.6			94.3	0.0		16.0	0.2
Delay (s)	27.0	12.8		2.8	9.3			163.2	63.3		81.9	61.7
Level of Service	C	B		A	A			F	E		F	E
Approach Delay (s)		13.3			9.2			147.0			75.3	
Approach LOS		B			A			F			E	

Intersection Summary			
HCM 2000 Control Delay	22.1	HCM 2000 Level of Service	C
HCM 2000 Volume to Capacity ratio	0.76		
Actuated Cycle Length (s)	150.0	Sum of lost time (s)	17.0
Intersection Capacity Utilization	74.7%	ICU Level of Service	D
Analysis Period (min)	15		

c Critical Lane Group

Movement	EBT	EBR	WBL	WBT	NBL	NBR
Lane Configurations						
Traffic Volume (veh/h)	825	165	363	1569	178	176
Future Volume (veh/h)	825	165	363	1569	178	176
Number	6	16	5	2	7	14
Initial Q (Qb), veh	0	0	0	0	0	0
Ped-Bike Adj(A_pbT)		1.00	1.00		1.00	1.00
Parking Bus, Adj	1.00	1.00	1.00	1.00	1.00	1.00
Adj Sat Flow, veh/h/ln	1863	1900	1863	1863	1863	1863
Adj Flow Rate, veh/h	971	194	374	1618	202	200
Adj No. of Lanes	2	0	1	2	1	1
Peak Hour Factor	0.85	0.85	0.97	0.97	0.88	0.88
Percent Heavy Veh, %	2	2	2	2	2	2
Cap, veh/h	2095	418	428	2803	251	224
Arrive On Green	0.71	0.71	0.12	1.00	0.14	0.14
Sat Flow, veh/h	3035	587	1774	3632	1774	1583
Grp Volume(v), veh/h	584	581	374	1618	202	200
Grp Sat Flow(s),veh/h/ln	1770	1759	1774	1770	1774	1583
Q Serve(g_s), s	21.3	21.3	9.0	0.0	16.6	18.6
Cycle Q Clear(g_c), s	21.3	21.3	9.0	0.0	16.6	18.6
Prop In Lane		0.33	1.00		1.00	1.00
Lane Grp Cap(c), veh/h	1260	1253	428	2803	251	224
V/C Ratio(X)	0.46	0.46	0.87	0.58	0.81	0.89
Avail Cap(c_a), veh/h	1260	1253	428	2803	319	285
HCM Platoon Ratio	1.00	1.00	2.00	2.00	1.00	1.00
Upstream Filter(I)	0.90	0.90	0.26	0.26	1.00	1.00
Uniform Delay (d), s/veh	9.3	9.3	14.0	0.0	62.4	63.3
Incr Delay (d2), s/veh	1.1	1.1	5.2	0.2	10.2	22.9
Initial Q Delay(d3),s/veh	0.0	0.0	0.0	0.0	0.0	0.0
%ile BackOfQ(50%),veh/ln	10.6	10.7	10.8	0.1	8.8	16.9
LnGrp Delay(d),s/veh	10.4	10.4	19.2	0.2	72.6	86.2
LnGrp LOS	B	B	B	A	E	F
Approach Vol, veh/h	1165			1992	402	
Approach Delay, s/veh	10.4			3.8	79.4	
Approach LOS	B			A	E	

Timer	1	2	3	4	5	6	7	8
Assigned Phs		2		4	5	6		
Phs Duration (G+Y+Rc), s		123.8		26.2	12.0	111.8		
Change Period (Y+Rc), s		5.0		5.0	3.0	5.0		
Max Green Setting (Gmax), s		113.0		27.0	9.0	101.0		
Max Q Clear Time (g_c+I1), s		2.0		20.6	11.0	23.3		
Green Ext Time (p_c), s		5.2		0.6	0.0	2.5		

Intersection Summary	
HCM 2010 Ctrl Delay	14.5
HCM 2010 LOS	B

Movement	EBL	EBT	EBR	WBL	WBT	WBR	NBL	NBT	NBR	SBL	SBT	SBR
Lane Configurations												
Traffic Volume (veh/h)	31	874	96	36	1464	11	341	8	136	17	8	67
Future Volume (veh/h)	31	874	96	36	1464	11	341	8	136	17	8	67
Number	1	6	16	5	2	12	7	4	14	3	8	18
Initial Q (Qb), veh	0	0	0	0	0	0	0	0	0	0	0	0
Ped-Bike Adj(A_pbT)	1.00		1.00	1.00		1.00	1.00		1.00	1.00		1.00
Parking Bus, Adj	1.00	1.00	1.00	1.00	1.00	1.00	1.00	1.00	1.00	1.00	1.00	1.00
Adj Sat Flow, veh/h/ln	1863	1863	1900	1863	1863	1900	1863	1863	1900	1900	1863	1900
Adj Flow Rate, veh/h	39	1092	120	37	1509	11	426	10	170	24	11	93
Adj No. of Lanes	1	2	0	1	2	0	1	1	0	0	1	0
Peak Hour Factor	0.80	0.80	0.80	0.97	0.97	0.97	0.80	0.80	0.80	0.72	0.72	0.72
Percent Heavy Veh, %	2	2	2	2	2	2	2	2	2	2	2	2
Cap, veh/h	216	2168	238	404	2425	18	217	18	302	56	38	174
Arrive On Green	0.05	1.00	1.00	0.02	0.45	0.45	0.20	0.20	0.20	0.20	0.20	0.20
Sat Flow, veh/h	1774	3217	353	1774	3601	26	1285	89	1508	139	189	871
Grp Volume(v), veh/h	39	600	612	37	741	779	426	0	180	128	0	0
Grp Sat Flow(s),veh/h/ln	1774	1770	1800	1774	1770	1858	1285	0	1597	1199	0	0
Q Serve(g_s), s	1.0	0.0	0.0	1.0	47.9	48.0	12.1	0.0	15.2	2.6	0.0	0.0
Cycle Q Clear(g_c), s	1.0	0.0	0.0	1.0	47.9	48.0	30.0	0.0	15.2	17.9	0.0	0.0
Prop In Lane	1.00		0.20	1.00		0.01	1.00		0.94	0.19		0.73
Lane Grp Cap(c), veh/h	216	1192	1213	404	1191	1251	217	0	319	268	0	0
V/C Ratio(X)	0.18	0.50	0.50	0.09	0.62	0.62	1.97	0.00	0.56	0.48	0.00	0.00
Avail Cap(c_a), veh/h	263	1192	1213	452	1191	1251	217	0	319	268	0	0
HCM Platoon Ratio	2.00	2.00	2.00	0.67	0.67	0.67	1.00	1.00	1.00	1.00	1.00	1.00
Upstream Filter(I)	0.86	0.86	0.86	1.00	1.00	1.00	1.00	0.00	1.00	1.00	0.00	0.00
Uniform Delay (d), s/veh	15.1	0.0	0.0	7.0	26.6	26.6	65.8	0.0	54.1	53.3	0.0	0.0
Incr Delay (d2), s/veh	0.1	1.3	1.3	0.0	2.5	2.3	451.5	0.0	1.9	1.0	0.0	0.0
Initial Q Delay(d3),s/veh	0.0	0.0	0.0	0.0	0.0	0.0	0.0	0.0	0.0	0.0	0.0	0.0
%ile BackOfQ(50%),veh/ln	0.6	0.4	0.4	0.5	24.3	25.5	36.1	0.0	6.9	4.9	0.0	0.0
LnGrp Delay(d),s/veh	15.2	1.3	1.3	7.0	29.1	29.0	517.3	0.0	56.0	54.3	0.0	0.0
LnGrp LOS	B	A	A	A	C	C	F		E	D		
Approach Vol, veh/h		1251			1557			606			128	
Approach Delay, s/veh		1.7			28.5			380.3			54.3	
Approach LOS		A			C			F			D	

Timer	1	2	3	4	5	6	7	8
Assigned Phs	1	2		4	5	6		8
Phs Duration (G+Y+Rc), s	7.0	107.0		36.0	6.9	107.1		36.0
Change Period (Y+Rc), s	3.0	6.0		6.0	3.0	6.0		6.0
Max Green Setting (Gmax), s	8.0	97.0		30.0	8.0	97.0		30.0
Max Q Clear Time (g_c+I1), s	3.0	50.0		32.0	3.0	2.0		19.9
Green Ext Time (p_c), s	0.0	3.5		0.0	0.0	2.6		0.4

Intersection Summary		
HCM 2010 Ctrl Delay	80.2	
HCM 2010 LOS	F	

Movement	EBL	EBT	EBR	WBL	WBT	WBR	NBL	NBT	NBR	SBL	SBT	SBR
Lane Configurations												
Traffic Volume (veh/h)	3	925	99	169	1261	11	249	4	361	5	1	1
Future Volume (veh/h)	3	925	99	169	1261	11	249	4	361	5	1	1
Number	1	6	16	5	2	12	7	4	14	3	8	18
Initial Q (Qb), veh	0	0	0	0	0	0	0	0	0	0	0	0
Ped-Bike Adj(A_pbT)	1.00		1.00	1.00		1.00	1.00		1.00	1.00		1.00
Parking Bus, Adj	1.00	1.00	1.00	1.00	1.00	1.00	1.00	1.00	1.00	1.00	1.00	1.00
Adj Sat Flow, veh/h/ln	1863	1863	1900	1863	1863	1900	1863	1863	1863	1900	1863	1900
Adj Flow Rate, veh/h	3	1028	110	171	1274	11	277	4	401	9	2	2
Adj No. of Lanes	1	2	0	1	2	0	1	1	1	0	1	0
Peak Hour Factor	0.90	0.90	0.90	0.99	0.99	0.99	0.90	0.90	0.90	0.55	0.55	0.55
Percent Heavy Veh, %	2	2	2	2	2	2	2	2	2	2	2	2
Cap, veh/h	291	1828	196	357	2373	20	434	509	433	249	55	48
Arrive On Green	0.57	0.57	0.57	0.15	1.00	1.00	0.27	0.27	0.27	0.27	0.27	0.27
Sat Flow, veh/h	428	3226	345	1774	3596	31	1407	1863	1583	762	203	175
Grp Volume(v), veh/h	3	564	574	171	627	658	277	4	401	13	0	0
Grp Sat Flow(s),veh/h/ln	428	1770	1802	1774	1770	1857	1407	1863	1583	1140	0	0
Q Serve(g_s), s	0.5	30.4	30.4	5.7	0.0	0.0	25.7	0.2	37.0	0.0	0.0	0.0
Cycle Q Clear(g_c), s	0.5	30.4	30.4	5.7	0.0	0.0	26.5	0.2	37.0	0.8	0.0	0.0
Prop In Lane	1.00		0.19	1.00		0.02	1.00		1.00	0.69		0.15
Lane Grp Cap(c), veh/h	291	1003	1021	357	1168	1226	434	509	433	352	0	0
V/C Ratio(X)	0.01	0.56	0.56	0.48	0.54	0.54	0.64	0.01	0.93	0.04	0.00	0.00
Avail Cap(c_a), veh/h	291	1003	1021	357	1168	1226	434	509	433	352	0	0
HCM Platoon Ratio	1.00	1.00	1.00	2.00	2.00	2.00	1.00	1.00	1.00	1.00	1.00	1.00
Upstream Filter(I)	1.00	1.00	1.00	1.00	1.00	1.00	1.00	1.00	1.00	1.00	0.00	0.00
Uniform Delay (d), s/veh	14.2	20.7	20.7	14.0	0.0	0.0	49.1	39.7	53.0	39.9	0.0	0.0
Incr Delay (d2), s/veh	0.1	2.3	2.2	4.5	1.8	1.7	7.0	0.0	28.3	0.2	0.0	0.0
Initial Q Delay(d3),s/veh	0.0	0.0	0.0	0.0	0.0	0.0	0.0	0.0	0.0	0.0	0.0	0.0
%ile BackOfQ(50%),veh/ln	0.1	15.4	15.6	3.2	0.6	0.6	11.2	0.1	19.6	0.4	0.0	0.0
LnGrp Delay(d),s/veh	14.2	22.9	22.9	18.5	1.8	1.7	56.1	39.7	81.3	40.1	0.0	0.0
LnGrp LOS	B	C	C	B	A	A	E	D	F	D		
Approach Vol, veh/h		1141			1456			682			13	
Approach Delay, s/veh		22.9			3.7			70.8			40.1	
Approach LOS		C			A			E			D	

Timer	1	2	3	4	5	6	7	8
Assigned Phs		2		4	5	6		8
Phs Duration (G+Y+Rc), s		104.0		46.0	14.0	90.0		46.0
Change Period (Y+Rc), s		5.0		5.0	3.0	5.0		5.0
Max Green Setting (Gmax), s		99.0		41.0	11.0	85.0		41.0
Max Q Clear Time (g_c+I1), s		2.0		39.0	7.7	32.4		2.8
Green Ext Time (p_c), s		2.7		0.6	0.1	2.4		0.0

Intersection Summary		
HCM 2010 Ctrl Delay		24.4
HCM 2010 LOS		C

Movement	EBL	EBT	EBR	WBL	WBT	WBR	NBL	NBT	NBR	SBL	SBT	SBR
Lane Configurations												
Traffic Volume (veh/h)	11	1280	0	20	1383	65	5	1	115	191	1	53
Future Volume (veh/h)	11	1280	0	20	1383	65	5	1	115	191	1	53
Number	1	6	16	5	2	12	7	4	14	3	8	18
Initial Q (Qb), veh	0	0	0	0	0	0	0	0	0	0	0	0
Ped-Bike Adj(A_pbT)	1.00		1.00	1.00		1.00	1.00		1.00	1.00		1.00
Parking Bus, Adj	1.00	1.00	1.00	1.00	1.00	1.00	1.00	1.00	1.00	1.00	1.00	1.00
Adj Sat Flow, veh/h/ln	1863	1863	1900	1863	1863	1900	1900	1863	1900	1863	1863	1900
Adj Flow Rate, veh/h	12	1407	0	21	1456	68	6	1	137	210	1	58
Adj No. of Lanes	1	2	0	1	2	0	0	1	0	1	1	0
Peak Hour Factor	0.91	0.91	0.91	0.95	0.95	0.95	0.84	0.84	0.84	0.91	0.91	0.91
Percent Heavy Veh, %	2	2	2	2	2	2	2	2	2	2	2	2
Cap, veh/h	270	1911	0	408	1860	87	32	15	433	364	8	447
Arrive On Green	0.17	1.00	0.00	0.09	0.54	0.54	0.29	0.29	0.29	0.29	0.29	0.29
Sat Flow, veh/h	1774	3632	0	1774	3444	160	24	54	1510	1246	27	1560
Grp Volume(v), veh/h	12	1407	0	21	746	778	144	0	0	210	0	59
Grp Sat Flow(s),veh/h/ln	1774	1770	0	1774	1770	1834	1587	0	0	1246	0	1587
Q Serve(g_s), s	0.3	0.0	0.0	0.7	50.3	50.8	0.0	0.0	0.0	17.1	0.0	4.1
Cycle Q Clear(g_c), s	0.3	0.0	0.0	0.7	50.3	50.8	10.6	0.0	0.0	27.7	0.0	4.1
Prop In Lane	1.00		0.00	1.00		0.09	0.04		0.95	1.00		0.98
Lane Grp Cap(c), veh/h	270	1911	0	408	956	991	480	0	0	364	0	455
V/C Ratio(X)	0.04	0.74	0.00	0.05	0.78	0.78	0.30	0.00	0.00	0.58	0.00	0.13
Avail Cap(c_a), veh/h	270	1911	0	408	956	991	480	0	0	364	0	455
HCM Platoon Ratio	2.00	2.00	2.00	1.00	1.00	1.00	1.00	1.00	1.00	1.00	1.00	1.00
Upstream Filter(I)	1.00	1.00	0.00	1.00	1.00	1.00	1.00	0.00	0.00	1.00	0.00	1.00
Uniform Delay (d), s/veh	17.6	0.0	0.0	10.6	27.4	27.5	42.0	0.0	0.0	49.7	0.0	39.6
Incr Delay (d2), s/veh	0.3	2.6	0.0	0.2	6.3	6.2	1.6	0.0	0.0	6.5	0.0	0.6
Initial Q Delay(d3),s/veh	0.0	0.0	0.0	0.0	0.0	0.0	0.0	0.0	0.0	0.0	0.0	0.0
%ile BackOfQ(50%),veh/ln	0.2	0.7	0.0	0.3	26.1	27.4	4.9	0.0	0.0	8.5	0.0	1.9
LnGrp Delay(d),s/veh	17.9	2.6	0.0	10.8	33.8	33.8	43.6	0.0	0.0	56.3	0.0	40.2
LnGrp LOS	B	A		B	C	C	D			E		D
Approach Vol, veh/h		1419			1545			144			269	
Approach Delay, s/veh		2.7			33.5			43.6			52.8	
Approach LOS		A			C			D			D	

Timer	1	2	3	4	5	6	7	8
Assigned Phs	1	2		4	5	6		8
Phs Duration (G+Y+Rc), s	16.0	86.0		48.0	16.0	86.0		48.0
Change Period (Y+Rc), s	3.0	5.0		5.0	3.0	5.0		5.0
Max Green Setting (Gmax), s	13.0	81.0		43.0	13.0	81.0		43.0
Max Q Clear Time (g_c+I1), s	2.3	52.8		12.6	2.7	2.0		29.7
Green Ext Time (p_c), s	0.0	3.5		0.7	0.0	4.2		0.7

Intersection Summary		
HCM 2010 Ctrl Delay	22.5	
HCM 2010 LOS	C	

Movement	EBL	EBT	EBR	WBL	WBT	WBR	NBL	NBT	NBR	SBL	SBT	SBR
Lane Configurations												
Traffic Volume (veh/h)	241	1201	144	217	966	91	229	822	292	231	830	273
Future Volume (veh/h)	241	1201	144	217	966	91	229	822	292	231	830	273
Number	3	8	18	7	4	14	1	6	16	5	2	12
Initial Q (Qb), veh	0	0	0	0	0	0	0	0	0	0	0	0
Ped-Bike Adj(A_pbT)	1.00		1.00	1.00		1.00	1.00		1.00	1.00		1.00
Parking Bus, Adj	1.00	1.00	1.00	1.00	1.00	1.00	1.00	1.00	1.00	1.00	1.00	1.00
Adj Sat Flow, veh/h/ln	1863	1863	1900	1863	1863	1900	1863	1863	1900	1863	1863	1900
Adj Flow Rate, veh/h	271	1349	162	231	1028	97	249	893	317	254	912	300
Adj No. of Lanes	2	3	0	2	3	0	2	3	0	2	3	0
Peak Hour Factor	0.89	0.89	0.89	0.94	0.94	0.94	0.92	0.92	0.92	0.91	0.91	0.91
Percent Heavy Veh, %	2	2	2	2	2	2	2	2	2	2	2	2
Cap, veh/h	318	1154	139	277	1129	106	285	1759	622	287	1800	590
Arrive On Green	0.09	0.25	0.25	0.08	0.24	0.24	0.08	0.47	0.47	0.08	0.47	0.47
Sat Flow, veh/h	3442	4603	553	3442	4729	445	3442	3709	1312	3442	3790	1243
Grp Volume(v), veh/h	271	994	517	231	737	388	249	816	394	254	815	397
Grp Sat Flow(s),veh/h/ln	1721	1695	1765	1721	1695	1784	1721	1695	1631	1721	1695	1643
Q Serve(g_s), s	14.0	45.1	45.1	11.9	38.0	38.1	12.9	30.0	30.1	13.1	29.9	30.1
Cycle Q Clear(g_c), s	14.0	45.1	45.1	11.9	38.0	38.1	12.9	30.0	30.1	13.1	29.9	30.1
Prop In Lane	1.00		0.31	1.00		0.25	1.00		0.80	1.00		0.76
Lane Grp Cap(c), veh/h	318	850	443	277	809	426	285	1608	774	287	1610	781
V/C Ratio(X)	0.85	1.17	1.17	0.83	0.91	0.91	0.87	0.51	0.51	0.89	0.51	0.51
Avail Cap(c_a), veh/h	1032	850	443	1032	848	446	287	1608	774	287	1610	781
HCM Platoon Ratio	1.00	1.00	1.00	1.00	1.00	1.00	1.00	1.00	1.00	1.00	1.00	1.00
Upstream Filter(I)	1.00	1.00	1.00	1.00	1.00	1.00	1.00	1.00	1.00	1.00	1.00	1.00
Uniform Delay (d), s/veh	80.5	67.4	67.4	81.6	66.6	66.7	81.6	32.8	32.8	81.7	32.7	32.7
Incr Delay (d2), s/veh	4.8	88.6	97.9	4.9	13.4	22.3	23.6	1.1	2.4	25.6	1.1	2.4
Initial Q Delay(d3),s/veh	0.0	0.0	0.0	0.0	0.0	0.0	0.0	0.0	0.0	0.0	0.0	0.0
%ile BackOfQ(50%),veh/ln	6.9	31.6	34.0	5.9	19.3	21.4	7.1	14.3	14.1	7.3	14.3	14.2
LnGrp Delay(d),s/veh	85.3	156.0	165.3	86.5	80.1	89.0	105.2	33.9	35.2	107.3	33.8	35.1
LnGrp LOS	F	F	F	F	F	F	F	C	D	F	C	D
Approach Vol, veh/h		1782			1356			1459			1466	
Approach Delay, s/veh		148.0			83.7			46.4			46.9	
Approach LOS		F			F			D			D	

Timer	1	2	3	4	5	6	7	8
Assigned Phs	1	2	3	4	5	6	7	8
Phs Duration (G+Y+Rc), s	18.9	91.5	20.7	49.0	19.0	91.4	18.5	51.1
Change Period (Y+Rc), s	4.0	6.0	4.0	6.0	4.0	6.0	4.0	6.0
Max Green Setting (Gmax), s	15.0	46.0	54.0	45.0	15.0	46.0	54.0	45.0
Max Q Clear Time (g_c+I1), s	14.9	32.1	16.0	40.1	15.1	32.1	13.9	47.1
Green Ext Time (p_c), s	0.0	2.7	0.7	2.8	0.0	2.7	0.6	0.0

Intersection Summary		
HCM 2010 Ctrl Delay		84.7
HCM 2010 LOS		F

Movement	EBL	EBT	EBR	WBL	WBT	WBR	NBL	NBT	NBR	SBL	SBT	SBR
Lane Configurations												
Traffic Volume (veh/h)	103	1590	31	0	908	126	83	42	5	268	92	283
Future Volume (veh/h)	103	1590	31	0	908	126	83	42	5	268	92	283
Number	1	6	16	5	2	12	7	4	14	3	8	18
Initial Q (Qb), veh	0	0	0	0	0	0	0	0	0	0	0	0
Ped-Bike Adj(A_pbT)	1.00		1.00	1.00		1.00	1.00		1.00	1.00		1.00
Parking Bus, Adj	1.00	1.00	1.00	1.00	1.00	1.00	1.00	1.00	1.00	1.00	1.00	1.00
Adj Sat Flow, veh/h/ln	1863	1863	1900	0	1863	1900	1863	1863	1863	1863	1863	1863
Adj Flow Rate, veh/h	114	1767	34	0	987	137	104	52	6	291	100	308
Adj No. of Lanes	1	2	0	0	2	0	1	1	1	1	1	1
Peak Hour Factor	0.90	0.90	0.90	0.92	0.92	0.92	0.80	0.80	0.80	0.92	0.92	0.92
Percent Heavy Veh, %	2	2	2	0	2	2	2	2	2	2	2	2
Cap, veh/h	336	2486	48	0	1961	272	222	269	229	289	269	229
Arrive On Green	0.04	0.70	0.70	0.00	0.63	0.63	0.05	0.14	0.14	0.05	0.14	0.14
Sat Flow, veh/h	1774	3552	68	0	3216	433	1774	1863	1583	1774	1863	1583
Grp Volume(v), veh/h	114	878	923	0	559	565	104	52	6	291	100	308
Grp Sat Flow(s),veh/h/ln	1774	1770	1851	0	1770	1786	1774	1863	1583	1774	1863	1583
Q Serve(g_s), s	4.0	53.2	53.7	0.0	30.9	31.0	9.0	4.4	0.6	9.0	8.7	26.0
Cycle Q Clear(g_c), s	4.0	53.2	53.7	0.0	30.9	31.0	9.0	4.4	0.6	9.0	8.7	26.0
Prop In Lane	1.00		0.04	0.00		0.24	1.00		1.00	1.00		1.00
Lane Grp Cap(c), veh/h	336	1239	1295	0	1111	1122	222	269	229	289	269	229
V/C Ratio(X)	0.34	0.71	0.71	0.00	0.50	0.50	0.47	0.19	0.03	1.01	0.37	1.35
Avail Cap(c_a), veh/h	396	1239	1295	0	1111	1122	222	269	229	289	269	229
HCM Platoon Ratio	1.00	1.00	1.00	1.00	1.00	1.00	1.00	1.00	1.00	1.00	1.00	1.00
Upstream Filter(I)	1.00	1.00	1.00	0.00	1.00	1.00	1.00	1.00	1.00	1.00	1.00	1.00
Uniform Delay (d), s/veh	13.9	16.1	16.2	0.0	18.2	18.2	62.3	67.8	66.1	74.7	69.6	77.0
Incr Delay (d2), s/veh	0.2	3.4	3.4	0.0	1.6	1.6	0.6	1.6	0.2	54.4	3.9	182.2
Initial Q Delay(d3),s/veh	0.0	0.0	0.0	0.0	0.0	0.0	0.0	0.0	0.0	0.0	0.0	0.0
%ile BackOfQ(50%),veh/ln	2.0	27.0	28.4	0.0	15.6	15.7	4.4	2.4	0.3	26.7	4.8	22.9
LnGrp Delay(d),s/veh	14.1	19.5	19.5	0.0	19.8	19.8	62.9	69.4	66.3	129.1	73.5	259.2
LnGrp LOS	B	B	B		B	B	E	E	E	F	E	F
Approach Vol, veh/h		1915			1124			162			699	
Approach Delay, s/veh		19.2			19.8			65.1			178.5	
Approach LOS		B			B			E			F	

Timer	1	2	3	4	5	6	7	8
Assigned Phs	1	2	3	4		6	7	8
Phs Duration (G+Y+Rc), s	13.0	119.0	15.0	33.0		132.0	15.0	33.0
Change Period (Y+Rc), s	6.0	6.0	6.0	7.0		6.0	6.0	7.0
Max Green Setting (Gmax), s	13.0	107.0	9.0	26.0		126.0	9.0	26.0
Max Q Clear Time (g_c+I1), s	6.0	33.0	11.0	6.4		55.7	11.0	28.0
Green Ext Time (p_c), s	0.1	2.3	0.0	0.2		4.7	0.0	0.0

Intersection Summary	
HCM 2010 Ctrl Delay	49.8
HCM 2010 LOS	D

Intersection	
Int Delay, s/veh	4

Movement	EBL	EBT	EBR	WBL	WBT	WBR	NBL	NBT	NBR	SBL	SBT	SBR
Lane Configurations												
Traffic Vol, veh/h	21	1430	412	148	1001	19	2	0	154	0	0	31
Future Vol, veh/h	21	1430	412	148	1001	19	2	0	154	0	0	31
Conflicting Peds, #/hr	0	0	0	0	0	0	0	0	0	0	0	0
Sign Control	Free	Free	Free	Free	Free	Free	Stop	Stop	Stop	Stop	Stop	Stop
RT Channelized	-	-	None	-	-	None	-	-	None	-	-	None
Storage Length	-	-	-	300	-	-	-	-	0	-	-	0
Veh in Median Storage, #	-	0	-	-	0	-	-	0	-	-	0	-
Grade, %	-	0	-	-	0	-	-	0	-	-	0	-
Peak Hour Factor	92	92	92	92	92	92	92	92	92	92	92	92
Heavy Vehicles, %	2	2	2	2	2	2	2	2	2	2	2	2
Mvmt Flow	23	1554	448	161	1088	21	2	0	167	0	0	34

Major/Minor	Major1			Major2			Minor1			Minor2		
Conflicting Flow All	1109	0	0	2002	0	0	2690	-	1001	-	-	555
Stage 1	-	-	-	-	-	-	1824	-	-	-	-	-
Stage 2	-	-	-	-	-	-	866	-	-	-	-	-
Critical Hdwy	4.14	-	-	4.14	-	-	7.54	-	6.94	-	-	6.94
Critical Hdwy Stg 1	-	-	-	-	-	-	6.54	-	-	-	-	-
Critical Hdwy Stg 2	-	-	-	-	-	-	6.54	-	-	-	-	-
Follow-up Hdwy	2.22	-	-	2.22	-	-	3.52	-	3.32	-	-	3.32
Pot Cap-1 Maneuver	625	-	-	282	-	-	10	0	241	0	0	475
Stage 1	-	-	-	-	-	-	80	0	-	0	0	-
Stage 2	-	-	-	-	-	-	314	0	-	0	0	-
Platoon blocked, %		-	-		-	-						
Mov Cap-1 Maneuver	625	-	-	282	-	-	5	-	241	-	-	475
Mov Cap-2 Maneuver	-	-	-	-	-	-	5	-	-	-	-	-
Stage 1	-	-	-	-	-	-	77	-	-	-	-	-
Stage 2	-	-	-	-	-	-	125	-	-	-	-	-

Approach	EB	WB	NB	SB
HCM Control Delay, s	0.1	4.2	48.1	13.2
HCM LOS			E	B

Minor Lane/Major Mvmt	NBLn1	EBL	EBT	EBR	WBL	WBT	WBR	SBLn1
Capacity (veh/h)	241	625	-	-	282	-	-	475
HCM Lane V/C Ratio	0.695	0.037	-	-	0.57	-	-	0.071
HCM Control Delay (s)	48.1	11	-	-	33.4	-	-	13.2
HCM Lane LOS	E	B	-	-	D	-	-	B
HCM 95th %tile Q(veh)	4.6	0.1	-	-	3.3	-	-	0.2

Intersection	
Int Delay, s/veh	1.8

Movement	EBT	EBR	WBL	WBT	NBL	NBR
Lane Configurations						
Traffic Vol, veh/h	1540	42	23	1152	16	16
Future Vol, veh/h	1540	42	23	1152	16	16
Conflicting Peds, #/hr	0	0	0	0	0	0
Sign Control	Free	Free	Free	Free	Stop	Stop
RT Channelized	-	None	-	None	-	None
Storage Length	-	-	200	-	0	0
Veh in Median Storage, #	0	-	-	0	0	-
Grade, %	0	-	-	0	0	-
Peak Hour Factor	92	92	92	92	92	92
Heavy Vehicles, %	2	2	2	2	2	2
Mvmt Flow	1674	46	25	1252	17	17

Major/Minor	Major1		Major2		Minor1	
Conflicting Flow All	0	0	1720	0	2373	860
Stage 1	-	-	-	-	1697	-
Stage 2	-	-	-	-	676	-
Critical Hdwy	-	-	4.14	-	6.84	6.94
Critical Hdwy Stg 1	-	-	-	-	5.84	-
Critical Hdwy Stg 2	-	-	-	-	5.84	-
Follow-up Hdwy	-	-	2.22	-	3.52	3.32
Pot Cap-1 Maneuver	-	-	364	-	29	299
Stage 1	-	-	-	-	134	-
Stage 2	-	-	-	-	467	-
Platoon blocked, %	-	-		-		
Mov Cap-1 Maneuver	-	-	364	-	27	299
Mov Cap-2 Maneuver	-	-	-	-	27	-
Stage 1	-	-	-	-	134	-
Stage 2	-	-	-	-	435	-

Approach	EB	WB	NB
HCM Control Delay, s	0	0.3	144.1
HCM LOS			F

Minor Lane/Major Mvmt	NBLn1	NBLn2	EBT	EBR	WBL	WBT
Capacity (veh/h)	27	299	-	-	364	-
HCM Lane V/C Ratio	0.644	0.058	-	-	0.069	-
HCM Control Delay (s)	270.5	17.8	-	-	15.6	-
HCM Lane LOS	F	C	-	-	C	-
HCM 95th %tile Q(veh)	2	0.2	-	-	0.2	-

Movement	EBL	EBT	EBR	WBL	WBT	WBR	NBL	NBT	NBR	SBL	SBT	SBR
Lane Configurations												
Traffic Volume (veh/h)	365	972	219	202	704	171	271	1269	120	380	1586	200
Future Volume (veh/h)	365	972	219	202	704	171	271	1269	120	380	1586	200
Number	3	8	18	7	4	14	1	6	16	5	2	12
Initial Q (Qb), veh	0	0	0	0	0	0	0	0	0	0	0	0
Ped-Bike Adj(A_pbT)	1.00		1.00	1.00		1.00	1.00		1.00	1.00		1.00
Parking Bus, Adj	1.00	1.00	1.00	1.00	1.00	1.00	1.00	1.00	1.00	1.00	1.00	1.00
Adj Sat Flow, veh/h/ln	1863	1863	1863	1863	1863	1863	1863	1863	1900	1863	1863	1900
Adj Flow Rate, veh/h	392	1045	235	235	819	199	335	1567	148	392	1635	206
Adj No. of Lanes	2	3	1	2	3	1	2	3	0	2	3	0
Peak Hour Factor	0.93	0.93	0.93	0.86	0.86	0.86	0.81	0.81	0.81	0.97	0.97	0.97
Percent Heavy Veh, %	2	2	2	2	2	2	2	2	2	2	2	2
Cap, veh/h	436	1160	536	280	930	490	380	2037	192	435	2045	257
Arrive On Green	0.13	0.23	0.23	0.08	0.18	0.18	0.11	0.43	0.43	0.13	0.45	0.45
Sat Flow, veh/h	3442	5085	1583	3442	5085	1583	3442	4728	446	3442	4576	575
Grp Volume(v), veh/h	392	1045	235	235	819	199	335	1123	592	392	1210	631
Grp Sat Flow(s),veh/h/ln	1721	1695	1583	1721	1695	1583	1721	1695	1784	1721	1695	1761
Q Serve(g_s), s	18.5	32.9	19.0	11.1	25.9	16.4	15.8	46.5	46.6	18.5	50.7	50.9
Cycle Q Clear(g_c), s	18.5	32.9	19.0	11.1	25.9	16.4	15.8	46.5	46.6	18.5	50.7	50.9
Prop In Lane	1.00		1.00	1.00		1.00	1.00		0.25	1.00		0.33
Lane Grp Cap(c), veh/h	436	1160	536	280	930	490	380	1461	769	435	1515	787
V/C Ratio(X)	0.90	0.90	0.44	0.84	0.88	0.41	0.88	0.77	0.77	0.90	0.80	0.80
Avail Cap(c_a), veh/h	521	1160	536	521	1017	517	501	1461	769	501	1515	787
HCM Platoon Ratio	1.00	1.00	1.00	1.00	1.00	1.00	1.00	1.00	1.00	1.00	1.00	1.00
Upstream Filter(I)	1.00	1.00	1.00	1.00	1.00	1.00	1.00	1.00	1.00	1.00	1.00	1.00
Uniform Delay (d), s/veh	71.0	61.9	42.4	74.7	65.6	45.0	72.3	40.0	40.0	71.1	39.3	39.3
Incr Delay (d2), s/veh	15.1	9.7	0.4	2.6	8.3	0.4	11.4	3.9	7.3	16.6	4.5	8.4
Initial Q Delay(d3),s/veh	0.0	0.0	0.0	0.0	0.0	0.0	0.0	0.0	0.0	0.0	0.0	0.0
%ile BackOfQ(50%),veh/ln	9.7	16.5	8.4	5.4	12.8	7.2	8.1	22.6	24.6	9.8	24.6	26.6
LnGrp Delay(d),s/veh	86.2	71.5	42.8	77.3	74.0	45.4	83.8	43.9	47.3	87.7	43.7	47.8
LnGrp LOS	F	E	D	E	E	D	F	D	D	F	D	D
Approach Vol, veh/h		1672			1253			2050			2233	
Approach Delay, s/veh		70.9			70.1			51.4			52.6	
Approach LOS		E			E			D			D	

Timer	1	2	3	4	5	6	7	8
Assigned Phs	1	2	3	4	5	6	7	8
Phs Duration (G+Y+Rc), s	23.2	79.7	25.9	36.2	25.8	77.1	18.4	43.6
Change Period (Y+Rc), s	5.0	6.0	5.0	6.0	5.0	6.0	5.0	6.0
Max Green Setting (Gmax), s	24.0	61.0	25.0	33.0	24.0	61.0	25.0	33.0
Max Q Clear Time (g_c+I1), s	17.8	52.9	20.5	27.9	20.5	48.6	13.1	34.9
Green Ext Time (p_c), s	0.4	3.8	0.4	2.3	0.3	4.4	0.3	0.0

Intersection Summary	
HCM 2010 Ctrl Delay	59.5
HCM 2010 LOS	E

Movement	EBL	EBT	EBR	WBL	WBT	WBR	NBL	NBT	NBR	SBL	SBT	SBR
Lane Configurations												
Traffic Volume (veh/h)	889	1347	554	202	689	107	349	311	161	177	216	216
Future Volume (veh/h)	889	1347	554	202	689	107	349	311	161	177	216	216
Number	1	6	16	5	2	12	7	4	14	3	8	18
Initial Q (Qb), veh	0	0	0	0	0	0	0	0	0	0	0	0
Ped-Bike Adj(A_pbT)	1.00		1.00	1.00		1.00	1.00		1.00	1.00		1.00
Parking Bus, Adj	1.00	1.00	1.00	1.00	1.00	1.00	1.00	1.00	1.00	1.00	1.00	1.00
Adj Sat Flow, veh/h/ln	1863	1863	1863	1863	1863	1900	1863	1863	1900	1863	1863	1900
Adj Flow Rate, veh/h	956	1448	596	222	757	118	379	338	175	184	225	225
Adj No. of Lanes	2	2	1	1	3	0	1	2	0	1	2	0
Peak Hour Factor	0.93	0.93	0.93	0.91	0.91	0.91	0.92	0.92	0.92	0.96	0.96	0.96
Percent Heavy Veh, %	2	2	2	2	2	2	2	2	2	2	2	2
Cap, veh/h	1237	1755	935	257	1074	166	227	452	230	188	283	253
Arrive On Green	0.36	0.50	0.50	0.11	0.24	0.24	0.09	0.20	0.20	0.06	0.16	0.16
Sat Flow, veh/h	3442	3539	1583	1774	4444	687	1774	2274	1155	1774	1770	1583
Grp Volume(v), veh/h	956	1448	596	222	576	299	379	262	251	184	225	225
Grp Sat Flow(s),veh/h/ln	1721	1770	1583	1774	1695	1741	1774	1770	1659	1774	1770	1583
Q Serve(g_s), s	44.3	62.8	44.5	16.8	27.9	28.3	17.0	25.0	25.8	10.0	22.0	25.0
Cycle Q Clear(g_c), s	44.3	62.8	44.5	16.8	27.9	28.3	17.0	25.0	25.8	10.0	22.0	25.0
Prop In Lane	1.00		1.00	1.00		0.39	1.00		0.70	1.00		1.00
Lane Grp Cap(c), veh/h	1237	1755	935	257	819	421	227	352	330	188	283	253
V/C Ratio(X)	0.77	0.83	0.64	0.86	0.70	0.71	1.67	0.74	0.76	0.98	0.79	0.89
Avail Cap(c_a), veh/h	1237	1755	935	297	1036	532	227	442	415	188	374	334
HCM Platoon Ratio	1.00	1.00	1.00	1.00	1.00	1.00	1.00	1.00	1.00	1.00	1.00	1.00
Upstream Filter(I)	1.00	1.00	1.00	1.00	1.00	1.00	1.00	1.00	1.00	1.00	1.00	1.00
Uniform Delay (d), s/veh	51.1	38.7	24.2	47.4	62.4	62.5	60.8	67.8	68.1	70.6	72.8	74.0
Incr Delay (d2), s/veh	3.1	3.2	1.1	18.4	0.9	2.0	319.7	4.5	5.6	59.3	7.6	18.6
Initial Q Delay(d3),s/veh	0.0	0.0	0.0	0.0	0.0	0.0	0.0	0.0	0.0	0.0	0.0	0.0
%ile BackOfQ(50%),veh/ln	21.6	31.3	19.6	9.5	13.2	13.9	23.1	12.7	12.3	10.8	11.4	12.3
LnGrp Delay(d),s/veh	54.2	41.9	25.3	65.8	63.3	64.5	380.6	72.3	73.7	129.8	80.3	92.6
LnGrp LOS	D	D	C	E	E	E	F	E	E	F	F	F
Approach Vol, veh/h		3000			1097			892			634	
Approach Delay, s/veh		42.5			64.1			203.7			99.1	
Approach LOS		D			E			F			F	

Timer	1	2	3	4	5	6	7	8
Assigned Phs	1	2	3	4	5	6	7	8
Phs Duration (G+Y+Rc), s	70.7	49.5	17.0	42.8	24.9	95.3	24.0	35.8
Change Period (Y+Rc), s	6.0	6.0	7.0	7.0	6.0	6.0	7.0	7.0
Max Green Setting (Gmax), s	44.0	55.0	10.0	45.0	23.0	76.0	17.0	38.0
Max Q Clear Time (g_c+I1), s	46.3	30.3	12.0	27.8	18.8	64.8	19.0	27.0
Green Ext Time (p_c), s	0.0	1.9	0.0	2.4	0.1	3.7	0.0	1.8

Intersection Summary	
HCM 2010 Ctrl Delay	78.7
HCM 2010 LOS	E

Intersection	
Int Delay, s/veh	0.7

Movement	EBL	EBT	WBT	WBR	SBL	SBR
Lane Configurations						
Traffic Vol, veh/h	0	0	951	43	0	47
Future Vol, veh/h	0	0	951	43	0	47
Conflicting Peds, #/hr	0	0	0	0	0	0
Sign Control	Free	Free	Free	Free	Stop	Stop
RT Channelized	-	None	-	None	-	None
Storage Length	100	-	-	50	0	-
Veh in Median Storage, #	-	0	0	-	0	-
Grade, %	-	0	0	-	0	-
Peak Hour Factor	92	92	92	92	92	92
Heavy Vehicles, %	2	2	2	2	2	2
Mvmt Flow	0	0	1034	47	0	51

Major/Minor	Major1		Major2		Minor2	
Conflicting Flow All	1081	0	-	0	1058	541
Stage 1	-	-	-	-	1058	-
Stage 2	-	-	-	-	0	-
Critical Hdwy	5.34	-	-	-	6.29	7.14
Critical Hdwy Stg 1	-	-	-	-	6.64	-
Critical Hdwy Stg 2	-	-	-	-	5.84	-
Follow-up Hdwy	3.12	-	-	-	3.67	3.92
Pot Cap-1 Maneuver	358	-	-	-	252	416
Stage 1	-	-	-	-	228	-
Stage 2	-	-	-	-	-	-
Platoon blocked, %		-	-	-		
Mov Cap-1 Maneuver	358	-	-	-	252	416
Mov Cap-2 Maneuver	-	-	-	-	252	-
Stage 1	-	-	-	-	228	-
Stage 2	-	-	-	-	-	-

Approach	EB	WB	SB
HCM Control Delay, s	0	0	14.9
HCM LOS			B

Minor Lane/Major Mvmt	EBL	EBT	WBT	WBR	SBLn1
Capacity (veh/h)	358	-	-	-	416
HCM Lane V/C Ratio	-	-	-	-	0.123
HCM Control Delay (s)	0	-	-	-	14.9
HCM Lane LOS	A	-	-	-	B
HCM 95th %tile Q(veh)	0	-	-	-	0.4

Intersection	
Int Delay, s/veh	2.1

Movement	EBT	EBR	WBL	WBT	NBL	NBR
Lane Configurations						
Traffic Vol, veh/h	1684	0	0	974	20	14
Future Vol, veh/h	1684	0	0	974	20	14
Conflicting Peds, #/hr	0	0	0	0	0	0
Sign Control	Free	Free	Free	Free	Stop	Stop
RT Channelized	-	None	-	None	-	None
Storage Length	-	-	-	-	0	50
Veh in Median Storage, #	0	-	-	0	0	-
Grade, %	0	-	-	0	0	-
Peak Hour Factor	92	92	92	92	92	92
Heavy Vehicles, %	2	2	2	2	2	2
Mvmt Flow	1830	0	0	1059	22	15

Major/Minor	Major1		Major2		Minor1	
Conflicting Flow All	0	-	-	-	2360	915
Stage 1	-	-	-	-	1830	-
Stage 2	-	-	-	-	530	-
Critical Hdwy	-	-	-	-	6.84	6.94
Critical Hdwy Stg 1	-	-	-	-	5.84	-
Critical Hdwy Stg 2	-	-	-	-	5.84	-
Follow-up Hdwy	-	-	-	-	3.52	3.32
Pot Cap-1 Maneuver	-	0	0	-	30	275
Stage 1	-	0	0	-	113	-
Stage 2	-	0	0	-	555	-
Platoon blocked, %	-			-		
Mov Cap-1 Maneuver	-	-	-	-	30	275
Mov Cap-2 Maneuver	-	-	-	-	30	-
Stage 1	-	-	-	-	113	-
Stage 2	-	-	-	-	555	-

Approach	EB	WB	NB
HCM Control Delay, s	0	0	166.8
HCM LOS			F

Minor Lane/Major Mvmt	NBLn1	NBLn2	EBT	WBT
Capacity (veh/h)	30	275	-	-
HCM Lane V/C Ratio	0.725	0.055	-	-
HCM Control Delay (s)	270.3	18.9	-	-
HCM Lane LOS	F	C	-	-
HCM 95th %tile Q(veh)	2.4	0.2	-	-

Intersection	
Int Delay, s/veh	0

Movement	EBL	EBT	WBT	WBR	SBL	SBR
Lane Configurations		↑↑	↑↑			↱
Traffic Vol, veh/h	0	1698	974	23	0	3
Future Vol, veh/h	0	1698	974	23	0	3
Conflicting Peds, #/hr	0	0	0	0	0	0
Sign Control	Free	Free	Free	Free	Stop	Stop
RT Channelized	-	None	-	None	-	None
Storage Length	-	-	-	-	-	0
Veh in Median Storage, #	-	0	0	-	0	-
Grade, %	-	0	0	-	0	-
Peak Hour Factor	92	92	92	92	92	92
Heavy Vehicles, %	2	2	2	2	2	2
Mvmt Flow	0	1846	1059	25	0	3

Major/Minor	Major1		Major2		Minor2	
Conflicting Flow All	-	0	-	0	-	542
Stage 1	-	-	-	-	-	-
Stage 2	-	-	-	-	-	-
Critical Hdwy	-	-	-	-	-	6.94
Critical Hdwy Stg 1	-	-	-	-	-	-
Critical Hdwy Stg 2	-	-	-	-	-	-
Follow-up Hdwy	-	-	-	-	-	3.32
Pot Cap-1 Maneuver	0	-	-	-	0	485
Stage 1	0	-	-	-	0	-
Stage 2	0	-	-	-	0	-
Platoon blocked, %		-	-	-		
Mov Cap-1 Maneuver	-	-	-	-	-	485
Mov Cap-2 Maneuver	-	-	-	-	-	-
Stage 1	-	-	-	-	-	-
Stage 2	-	-	-	-	-	-

Approach	EB	WB	SB
HCM Control Delay, s	0	0	12.5
HCM LOS			B

Minor Lane/Major Mvmt	EBT	WBT	WBR	SBLn1
Capacity (veh/h)	-	-	-	485
HCM Lane V/C Ratio	-	-	-	0.007
HCM Control Delay (s)	-	-	-	12.5
HCM Lane LOS	-	-	-	B
HCM 95th %tile Q(veh)	-	-	-	0

Movement	EBL	EBT	EBR	WBL	WBT	WBR	NBL	NBT	NBR	SBL	SBT	SBR
Lane Configurations												
Traffic Volume (veh/h)	200	1328	170	123	748	146	177	98	171	112	60	72
Future Volume (veh/h)	200	1328	170	123	748	146	177	98	171	112	60	72
Number	1	6	16	5	2	12	7	4	14	3	8	18
Initial Q (Qb), veh	0	0	0	0	0	0	0	0	0	0	0	0
Ped-Bike Adj(A_pbT)	1.00		1.00	1.00		1.00	1.00		1.00	1.00		1.00
Parking Bus, Adj	1.00	1.00	1.00	1.00	1.00	1.00	1.00	1.00	1.00	1.00	1.00	1.00
Adj Sat Flow, veh/h/ln	1863	1863	1900	1863	1863	1900	1863	1863	1863	1863	1863	1863
Adj Flow Rate, veh/h	215	1428	183	129	787	154	199	110	192	129	69	83
Adj No. of Lanes	1	2	0	1	2	0	1	1	1	1	1	1
Peak Hour Factor	0.93	0.93	0.93	0.95	0.95	0.95	0.89	0.89	0.89	0.87	0.87	0.87
Percent Heavy Veh, %	2	2	2	2	2	2	2	2	2	2	2	2
Cap, veh/h	523	2037	259	230	1856	363	302	250	212	264	250	212
Arrive On Green	0.06	0.64	0.64	0.08	1.00	1.00	0.07	0.13	0.13	0.07	0.13	0.13
Sat Flow, veh/h	1774	3160	401	1774	2953	578	1774	1863	1583	1774	1863	1583
Grp Volume(v), veh/h	215	794	817	129	472	469	199	110	192	129	69	83
Grp Sat Flow(s),veh/h/ln	1774	1770	1792	1774	1770	1761	1774	1863	1583	1774	1863	1583
Q Serve(g_s), s	6.3	43.4	44.7	4.0	0.0	0.0	11.0	8.2	17.9	9.3	5.0	7.2
Cycle Q Clear(g_c), s	6.3	43.4	44.7	4.0	0.0	0.0	11.0	8.2	17.9	9.3	5.0	7.2
Prop In Lane	1.00		0.22	1.00		0.33	1.00		1.00	1.00		1.00
Lane Grp Cap(c), veh/h	523	1141	1155	230	1112	1107	302	250	212	264	250	212
V/C Ratio(X)	0.41	0.70	0.71	0.56	0.42	0.42	0.66	0.44	0.90	0.49	0.28	0.39
Avail Cap(c_a), veh/h	598	1141	1155	334	1112	1107	302	261	222	264	261	222
HCM Platoon Ratio	1.00	1.00	1.00	2.00	2.00	2.00	1.00	1.00	1.00	1.00	1.00	1.00
Upstream Filter(I)	1.00	1.00	1.00	0.79	0.79	0.79	1.00	1.00	1.00	1.00	1.00	1.00
Uniform Delay (d), s/veh	7.9	17.2	17.4	17.9	0.0	0.0	54.6	59.8	64.0	51.1	58.4	59.3
Incr Delay (d2), s/veh	0.5	3.5	3.7	1.7	0.9	0.9	5.2	1.7	35.6	1.4	0.8	1.7
Initial Q Delay(d3),s/veh	0.0	0.0	0.0	0.0	0.0	0.0	0.0	0.0	0.0	0.0	0.0	0.0
%ile BackOfQ(50%),veh/ln	3.1	22.3	23.2	2.5	0.3	0.3	7.5	4.3	9.9	4.7	2.6	3.3
LnGrp Delay(d),s/veh	8.5	20.7	21.1	19.6	0.9	0.9	59.8	61.5	99.6	52.5	59.2	61.0
LnGrp LOS	A	C	C	B	A	A	E	E	F	D	E	E
Approach Vol, veh/h		1826			1070			501			281	
Approach Delay, s/veh		19.4			3.2			75.4			56.6	
Approach LOS		B			A			E			E	

Timer	1	2	3	4	5	6	7	8
Assigned Phs	1	2	3	4	5	6	7	8
Phs Duration (G+Y+Rc), s	11.6	99.3	14.0	25.1	9.2	101.7	14.0	25.1
Change Period (Y+Rc), s	3.0	5.0	3.0	5.0	3.0	5.0	3.0	5.0
Max Green Setting (Gmax), s	15.0	87.0	11.0	21.0	15.0	87.0	11.0	21.0
Max Q Clear Time (g_c+I1), s	8.3	2.0	11.3	19.9	6.0	46.7	13.0	9.2
Green Ext Time (p_c), s	0.3	11.2	0.0	0.2	0.2	23.2	0.0	0.6

Intersection Summary	
HCM 2010 Ctrl Delay	25.2
HCM 2010 LOS	C

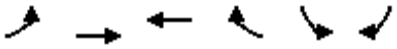

Movement	EBL	EBT	WBT	WBR	SBL	SBR
Lane Configurations						
Traffic Volume (veh/h)	214	1397	939	282	224	88
Future Volume (veh/h)	214	1397	939	282	224	88
Number	1	6	2	12	3	18
Initial Q (Qb), veh	0	0	0	0	0	0
Ped-Bike Adj(A_pbT)	1.00			1.00	1.00	1.00
Parking Bus, Adj	1.00	1.00	1.00	1.00	1.00	1.00
Adj Sat Flow, veh/h/ln	1863	1863	1863	1900	1863	1863
Adj Flow Rate, veh/h	223	1455	999	300	241	95
Adj No. of Lanes	1	2	2	0	1	1
Peak Hour Factor	0.96	0.96	0.94	0.94	0.93	0.93
Percent Heavy Veh, %	2	2	2	2	2	2
Cap, veh/h	366	2766	1911	571	269	240
Arrive On Green	0.10	1.00	0.71	0.71	0.15	0.15
Sat Flow, veh/h	1774	3632	2781	803	1774	1583
Grp Volume(v), veh/h	223	1455	656	643	241	95
Grp Sat Flow(s),veh/h/ln	1774	1770	1770	1721	1774	1583
Q Serve(g_s), s	5.4	0.0	25.5	25.9	20.0	8.1
Cycle Q Clear(g_c), s	5.4	0.0	25.5	25.9	20.0	8.1
Prop In Lane	1.00			0.47	1.00	1.00
Lane Grp Cap(c), veh/h	366	2766	1258	1223	269	240
V/C Ratio(X)	0.61	0.53	0.52	0.53	0.90	0.40
Avail Cap(c_a), veh/h	453	2766	1258	1223	603	538
HCM Platoon Ratio	2.00	2.00	1.00	1.00	1.00	1.00
Upstream Filter(I)	0.64	0.64	1.00	1.00	1.00	1.00
Uniform Delay (d), s/veh	9.1	0.0	10.0	10.0	62.5	57.4
Incr Delay (d2), s/veh	0.8	0.5	1.5	1.6	7.9	0.8
Initial Q Delay(d3),s/veh	0.0	0.0	0.0	0.0	0.0	0.0
%ile BackOfQ(50%),veh/ln	3.2	0.2	12.9	12.7	10.4	3.6
LnGrp Delay(d),s/veh	9.9	0.5	11.5	11.6	70.3	58.2
LnGrp LOS	A	A	B	B	E	E
Approach Vol, veh/h		1678	1299		336	
Approach Delay, s/veh		1.7	11.6		66.9	
Approach LOS		A	B		E	

Timer	1	2	3	4	5	6	7	8
Assigned Phs	1	2				6		8
Phs Duration (G+Y+Rc), s	10.6	111.6				122.3		27.7
Change Period (Y+Rc), s	3.0	5.0				5.0		5.0
Max Green Setting (Gmax), s	15.6	71.0				89.0		51.0
Max Q Clear Time (g_c+I1), s	7.4	27.9				2.0		22.0
Green Ext Time (p_c), s	0.3	2.9				4.4		0.7

Intersection Summary	
HCM 2010 Ctrl Delay	12.2
HCM 2010 LOS	B

Intersection	
Int Delay, s/veh	1.5

Movement	EBL	EBT	WBT	WBR	SBL	SBR
Lane Configurations						
Traffic Vol, veh/h	95	1529	1179	15	8	44
Future Vol, veh/h	95	1529	1179	15	8	44
Conflicting Peds, #/hr	0	0	0	0	0	0
Sign Control	Free	Free	Free	Free	Stop	Stop
RT Channelized	-	None	-	None	-	None
Storage Length	100	-	-	-	0	-
Veh in Median Storage, #	-	0	0	-	0	-
Grade, %	-	0	0	-	0	-
Peak Hour Factor	92	92	92	92	92	92
Heavy Vehicles, %	2	2	2	2	2	2
Mvmt Flow	103	1662	1282	16	9	48

Major/Minor	Major1		Major2		Minor2	
Conflicting Flow All	1298	0	-	0	2327	649
Stage 1	-	-	-	-	1290	-
Stage 2	-	-	-	-	1037	-
Critical Hdwy	4.14	-	-	-	6.84	6.94
Critical Hdwy Stg 1	-	-	-	-	5.84	-
Critical Hdwy Stg 2	-	-	-	-	5.84	-
Follow-up Hdwy	2.22	-	-	-	3.52	3.32
Pot Cap-1 Maneuver	530	-	-	-	31	412
Stage 1	-	-	-	-	222	-
Stage 2	-	-	-	-	303	-
Platoon blocked, %		-	-	-		
Mov Cap-1 Maneuver	530	-	-	-	25	412
Mov Cap-2 Maneuver	-	-	-	-	25	-
Stage 1	-	-	-	-	179	-
Stage 2	-	-	-	-	303	-

Approach	EB	WB	SB
HCM Control Delay, s	0.8	0	57.7
HCM LOS			F

Minor Lane/Major Mvmt	EBL	EBT	WBT	WBR	SBLn1
Capacity (veh/h)	530	-	-	-	122
HCM Lane V/C Ratio	0.195	-	-	-	0.463
HCM Control Delay (s)	13.4	-	-	-	57.7
HCM Lane LOS	B	-	-	-	F
HCM 95th %tile Q(veh)	0.7	-	-	-	2.1

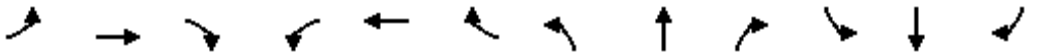

Movement	EBL	EBT	EBR	WBL	WBT	WBR	NBL	NBT	NBR	SBL	SBT	SBR
Lane Configurations												
Traffic Volume (vph)	61	1475	47	73	1091	112	69	17	75	51	4	35
Future Volume (vph)	61	1475	47	73	1091	112	69	17	75	51	4	35
Ideal Flow (vphpl)	1900	1900	1900	1900	1900	1900	1900	1900	1900	1900	1900	1900
Total Lost time (s)	5.0	5.0		5.0	5.0			6.0	6.0		6.0	6.0
Lane Util. Factor	1.00	0.95		1.00	0.95			1.00	1.00		1.00	1.00
Frt	1.00	1.00		1.00	0.99			1.00	0.85		1.00	0.85
Flt Protected	0.95	1.00		0.95	1.00			0.96	1.00		0.96	1.00
Satd. Flow (prot)	1770	3523		1770	3490			1791	1583		1780	1583
Flt Permitted	0.19	1.00		0.12	1.00			0.96	1.00		0.96	1.00
Satd. Flow (perm)	353	3523		218	3490			1791	1583		1780	1583
Peak-hour factor, PHF	0.95	0.95	0.95	0.96	0.96	0.96	0.83	0.83	0.83	0.91	0.91	0.91
Adj. Flow (vph)	64	1553	49	76	1136	117	83	20	90	56	4	38
RTOR Reduction (vph)	0	1	0	0	5	0	0	0	83	0	0	36
Lane Group Flow (vph)	64	1601	0	76	1248	0	0	103	7	0	60	2
Turn Type	Perm	NA		Perm	NA		Split	NA	Perm	Split	NA	Perm
Protected Phases		6			2		4	4		3	3	
Permitted Phases	6			2					4			3
Actuated Green, G (s)	112.4	112.4		112.4	112.4			12.0	12.0		8.6	8.6
Effective Green, g (s)	112.4	112.4		112.4	112.4			12.0	12.0		8.6	8.6
Actuated g/C Ratio	0.75	0.75		0.75	0.75			0.08	0.08		0.06	0.06
Clearance Time (s)	5.0	5.0		5.0	5.0			6.0	6.0		6.0	6.0
Vehicle Extension (s)	1.0	1.0		1.0	1.0			2.5	2.5		2.5	2.5
Lane Grp Cap (vph)	264	2639		163	2615			143	126		102	90
v/s Ratio Prot		c0.45			0.36			c0.06			c0.03	
v/s Ratio Perm	0.18			0.35					0.00			0.00
v/c Ratio	0.24	0.61		0.47	0.48			0.72	0.06		0.59	0.02
Uniform Delay, d1	5.8	8.6		7.2	7.3			67.4	63.8		69.0	66.7
Progression Factor	0.46	0.62		1.20	1.23			1.00	1.00		1.00	1.00
Incremental Delay, d2	1.9	0.9		8.3	0.6			15.4	0.1		7.0	0.1
Delay (s)	4.5	6.3		17.0	9.6			82.7	63.9		76.0	66.8
Level of Service	A	A		B	A			F	E		E	E
Approach Delay (s)		6.2			10.0			74.0			72.4	
Approach LOS		A			B			E			E	

Intersection Summary			
HCM 2000 Control Delay	13.7	HCM 2000 Level of Service	B
HCM 2000 Volume to Capacity ratio	0.62		
Actuated Cycle Length (s)	150.0	Sum of lost time (s)	17.0
Intersection Capacity Utilization	80.3%	ICU Level of Service	D
Analysis Period (min)	15		

c Critical Lane Group

Movement	EBT	EBR	WBL	WBT	NBL	NBR
Lane Configurations						
Traffic Volume (veh/h)	1354	256	237	1045	231	320
Future Volume (veh/h)	1354	256	237	1045	231	320
Number	6	16	5	2	7	14
Initial Q (Qb), veh	0	0	0	0	0	0
Ped-Bike Adj(A_pbT)		1.00	1.00		1.00	1.00
Parking Bus, Adj	1.00	1.00	1.00	1.00	1.00	1.00
Adj Sat Flow, veh/h/ln	1863	1900	1863	1863	1863	1863
Adj Flow Rate, veh/h	1396	264	260	1148	254	352
Adj No. of Lanes	2	0	1	2	1	1
Peak Hour Factor	0.97	0.97	0.91	0.91	0.91	0.91
Percent Heavy Veh, %	2	2	2	2	2	2
Cap, veh/h	1907	355	272	2595	355	317
Arrive On Green	0.64	0.64	0.15	1.00	0.20	0.20
Sat Flow, veh/h	3073	555	1774	3632	1774	1583
Grp Volume(v), veh/h	820	840	260	1148	254	352
Grp Sat Flow(s),veh/h/ln	1770	1765	1774	1770	1774	1583
Q Serve(g_s), s	46.6	49.0	9.6	0.0	20.1	30.0
Cycle Q Clear(g_c), s	46.6	49.0	9.6	0.0	20.1	30.0
Prop In Lane		0.31	1.00		1.00	1.00
Lane Grp Cap(c), veh/h	1133	1130	272	2595	355	317
V/C Ratio(X)	0.72	0.74	0.96	0.44	0.72	1.11
Avail Cap(c_a), veh/h	1133	1130	272	2595	355	317
HCM Platoon Ratio	1.00	1.00	2.00	2.00	1.00	1.00
Upstream Filter(I)	0.78	0.78	0.85	0.85	1.00	1.00
Uniform Delay (d), s/veh	18.1	18.5	30.0	0.0	56.0	60.0
Incr Delay (d2), s/veh	3.2	3.5	38.7	0.5	6.4	84.0
Initial Q Delay(d3),s/veh	0.0	0.0	0.0	0.0	0.0	0.0
%ile BackOfQ(50%),veh/ln	23.5	24.9	13.5	0.2	10.4	31.1
LnGrp Delay(d),s/veh	21.3	22.0	68.7	0.5	62.4	144.0
LnGrp LOS	C	C	E	A	E	F
Approach Vol, veh/h	1660			1408	606	
Approach Delay, s/veh	21.7			13.1	109.8	
Approach LOS	C			B	F	

Timer	1	2	3	4	5	6	7	8
Assigned Phs		2		4	5	6		
Phs Duration (G+Y+Rc), s		115.0		35.0	14.0	101.0		
Change Period (Y+Rc), s		5.0		5.0	3.0	5.0		
Max Green Setting (Gmax), s		110.0		30.0	11.0	96.0		
Max Q Clear Time (g_c+I1), s		2.0		32.0	11.6	51.0		
Green Ext Time (p_c), s		3.1		0.0	0.0	4.3		

Intersection Summary	
HCM 2010 Ctrl Delay	32.9
HCM 2010 LOS	C

Movement	EBL	EBT	EBR	WBL	WBT	WBR	NBL	NBT	NBR	SBL	SBT	SBR
Lane Configurations												
Traffic Volume (veh/h)	71	1309	285	123	1199	21	100	1	89	12	1	19
Future Volume (veh/h)	71	1309	285	123	1199	21	100	1	89	12	1	19
Number	1	6	16	5	2	12	7	4	14	3	8	18
Initial Q (Qb), veh	0	0	0	0	0	0	0	0	0	0	0	0
Ped-Bike Adj(A_pbT)	1.00		1.00	1.00		1.00	1.00		1.00	1.00		1.00
Parking Bus, Adj	1.00	1.00	1.00	1.00	1.00	1.00	1.00	1.00	1.00	1.00	1.00	1.00
Adj Sat Flow, veh/h/ln	1863	1863	1900	1863	1863	1900	1863	1863	1900	1900	1863	1900
Adj Flow Rate, veh/h	78	1438	313	129	1262	22	119	1	106	18	1	28
Adj No. of Lanes	1	2	0	1	2	0	1	1	0	0	1	0
Peak Hour Factor	0.91	0.91	0.91	0.95	0.95	0.95	0.84	0.84	0.84	0.67	0.67	0.67
Percent Heavy Veh, %	2	2	2	2	2	2	2	2	2	2	2	2
Cap, veh/h	423	2158	459	310	2647	46	189	2	195	67	16	74
Arrive On Green	0.06	1.00	1.00	0.07	1.00	1.00	0.12	0.12	0.12	0.12	0.12	0.12
Sat Flow, veh/h	1774	2905	618	1774	3559	62	1375	15	1571	273	132	597
Grp Volume(v), veh/h	78	863	888	129	627	657	119	0	107	47	0	0
Grp Sat Flow(s),veh/h/ln	1774	1770	1754	1774	1770	1852	1375	0	1586	1002	0	0
Q Serve(g_s), s	1.6	0.0	0.0	2.8	0.0	0.0	5.6	0.0	9.5	0.9	0.0	0.0
Cycle Q Clear(g_c), s	1.6	0.0	0.0	2.8	0.0	0.0	16.0	0.0	9.5	10.4	0.0	0.0
Prop In Lane	1.00		0.35	1.00		0.03	1.00		0.99	0.38		0.60
Lane Grp Cap(c), veh/h	423	1314	1302	310	1316	1377	189	0	197	158	0	0
V/C Ratio(X)	0.18	0.66	0.68	0.42	0.48	0.48	0.63	0.00	0.54	0.30	0.00	0.00
Avail Cap(c_a), veh/h	485	1314	1302	369	1316	1377	330	0	359	307	0	0
HCM Platoon Ratio	2.00	2.00	2.00	2.00	2.00	2.00	1.00	1.00	1.00	1.00	1.00	1.00
Upstream Filter(I)	0.55	0.55	0.55	1.00	1.00	1.00	1.00	0.00	1.00	1.00	0.00	0.00
Uniform Delay (d), s/veh	3.9	0.0	0.0	3.9	0.0	0.0	65.2	0.0	61.7	60.2	0.0	0.0
Incr Delay (d2), s/veh	0.0	1.4	1.6	0.3	1.2	1.2	2.5	0.0	1.7	0.8	0.0	0.0
Initial Q Delay(d3),s/veh	0.0	0.0	0.0	0.0	0.0	0.0	0.0	0.0	0.0	0.0	0.0	0.0
%ile BackOfQ(50%),veh/ln	0.7	0.5	0.6	1.3	0.5	0.5	5.0	0.0	4.3	1.9	0.0	0.0
LnGrp Delay(d),s/veh	3.9	1.4	1.6	4.3	1.2	1.2	67.8	0.0	63.4	61.0	0.0	0.0
LnGrp LOS	A	A	A	A	A	A	E		E	E		
Approach Vol, veh/h		1829			1413			226			47	
Approach Delay, s/veh		1.6			1.5			65.7			61.0	
Approach LOS		A			A			E			E	

Timer	1	2	3	4	5	6	7	8
Assigned Phs	1	2		4	5	6		8
Phs Duration (G+Y+Rc), s	7.8	117.6		24.6	8.0	117.4		24.6
Change Period (Y+Rc), s	3.0	6.0		6.0	3.0	6.0		6.0
Max Green Setting (Gmax), s	10.0	91.0		34.0	10.0	91.0		34.0
Max Q Clear Time (g_c+I1), s	3.6	2.0		18.0	4.8	2.0		12.4
Green Ext Time (p_c), s	0.0	2.7		0.7	0.1	4.7		0.1

Intersection Summary		
HCM 2010 Ctrl Delay	6.5	
HCM 2010 LOS	A	

Movement	EBL	EBT	EBR	WBL	WBT	WBR	NBL	NBT	NBR	SBL	SBT	SBR
Lane Configurations												
Traffic Volume (veh/h)	7	1149	254	359	1164	8	168	0	227	4	5	11
Future Volume (veh/h)	7	1149	254	359	1164	8	168	0	227	4	5	11
Number	1	6	16	5	2	12	7	4	14	3	8	18
Initial Q (Qb), veh	0	0	0	0	0	0	0	0	0	0	0	0
Ped-Bike Adj(A_pbT)	1.00		1.00	1.00		1.00	1.00		1.00	1.00		1.00
Parking Bus, Adj	1.00	1.00	1.00	1.00	1.00	1.00	1.00	1.00	1.00	1.00	1.00	1.00
Adj Sat Flow, veh/h/ln	1863	1863	1900	1863	1863	1900	1863	1863	1863	1900	1863	1900
Adj Flow Rate, veh/h	7	1209	267	378	1225	8	179	0	241	5	6	14
Adj No. of Lanes	1	2	0	1	2	0	1	1	1	0	1	0
Peak Hour Factor	0.95	0.95	0.95	0.95	0.95	0.95	0.94	0.94	0.94	0.81	0.81	0.81
Percent Heavy Veh, %	2	2	2	2	2	2	2	2	2	2	2	2
Cap, veh/h	347	1922	420	142	2759	18	286	313	266	65	80	148
Arrive On Green	1.00	1.00	1.00	0.16	1.00	1.00	0.17	0.00	0.17	0.17	0.17	0.17
Sat Flow, veh/h	450	2889	632	1774	3605	24	1386	1863	1583	213	478	880
Grp Volume(v), veh/h	7	736	740	378	601	632	179	0	241	25	0	0
Grp Sat Flow(s),veh/h/ln	450	1770	1751	1774	1770	1859	1386	1863	1583	1571	0	0
Q Serve(g_s), s	0.0	0.0	0.0	12.0	0.0	0.0	16.0	0.0	22.4	0.0	0.0	0.0
Cycle Q Clear(g_c), s	0.0	0.0	0.0	12.0	0.0	0.0	17.9	0.0	22.4	1.9	0.0	0.0
Prop In Lane	1.00		0.36	1.00		0.01	1.00		1.00	0.20		0.56
Lane Grp Cap(c), veh/h	347	1177	1165	142	1354	1422	286	313	266	293	0	0
V/C Ratio(X)	0.02	0.63	0.64	2.66	0.44	0.44	0.63	0.00	0.91	0.09	0.00	0.00
Avail Cap(c_a), veh/h	347	1177	1165	142	1354	1422	339	385	327	351	0	0
HCM Platoon Ratio	2.00	2.00	2.00	2.00	2.00	2.00	1.00	1.00	1.00	1.00	1.00	1.00
Upstream Filter(I)	1.00	1.00	1.00	0.69	0.69	0.69	1.00	0.00	1.00	1.00	0.00	0.00
Uniform Delay (d), s/veh	0.0	0.0	0.0	63.0	0.0	0.0	59.1	0.0	61.2	52.7	0.0	0.0
Incr Delay (d2), s/veh	0.1	2.5	2.6	762.2	0.7	0.7	2.7	0.0	24.3	0.1	0.0	0.0
Initial Q Delay(d3),s/veh	0.0	0.0	0.0	0.0	0.0	0.0	0.0	0.0	0.0	0.0	0.0	0.0
%ile BackOfQ(50%),veh/ln	0.0	0.8	0.9	35.9	0.3	0.3	7.3	0.0	11.6	0.9	0.0	0.0
LnGrp Delay(d),s/veh	0.1	2.5	2.6	825.2	0.7	0.7	61.8	0.0	85.5	52.8	0.0	0.0
LnGrp LOS	A	A	A	F	A	A	E		F	D		
Approach Vol, veh/h		1483			1611			420			25	
Approach Delay, s/veh		2.6			194.2			75.4			52.8	
Approach LOS		A			F			E			D	

Timer	1	2	3	4	5	6	7	8
Assigned Phs		2		4	5	6		8
Phs Duration (G+Y+Rc), s		119.8		30.2	15.0	104.8		30.2
Change Period (Y+Rc), s		5.0		5.0	3.0	5.0		5.0
Max Green Setting (Gmax), s		109.0		31.0	12.0	94.0		31.0
Max Q Clear Time (g_c+I1), s		2.0		24.4	14.0	2.0		3.9
Green Ext Time (p_c), s		2.5		0.8	0.0	3.6		0.1

Intersection Summary		
HCM 2010 Ctrl Delay		98.8
HCM 2010 LOS		F

Movement	EBL	EBT	EBR	WBL	WBT	WBR	NBL	NBT	NBR	SBL	SBT	SBR
Lane Configurations												
Traffic Volume (veh/h)	56	1324	0	43	1470	190	2	0	33	100	0	59
Future Volume (veh/h)	56	1324	0	43	1470	190	2	0	33	100	0	59
Number	1	6	16	5	2	12	7	4	14	3	8	18
Initial Q (Qb), veh	0	0	0	0	0	0	0	0	0	0	0	0
Ped-Bike Adj(A_pbT)	1.00		1.00	1.00		1.00	1.00		1.00	1.00		1.00
Parking Bus, Adj	1.00	1.00	1.00	1.00	1.00	1.00	1.00	1.00	1.00	1.00	1.00	1.00
Adj Sat Flow, veh/h/ln	1863	1863	1900	1863	1863	1900	1900	1863	1900	1863	1863	1900
Adj Flow Rate, veh/h	60	1409	0	46	1564	202	3	0	46	123	0	73
Adj No. of Lanes	1	2	0	1	2	0	0	1	0	1	1	0
Peak Hour Factor	0.94	0.94	0.94	0.94	0.94	0.94	0.71	0.71	0.71	0.81	0.81	0.81
Percent Heavy Veh, %	2	2	2	2	2	2	2	2	2	2	2	2
Cap, veh/h	253	2770	0	395	2466	314	29	7	152	193	0	162
Arrive On Green	0.06	1.00	0.00	0.03	0.78	0.78	0.10	0.00	0.10	0.10	0.00	0.10
Sat Flow, veh/h	1774	3632	0	1774	3159	402	32	65	1489	1354	0	1583
Grp Volume(v), veh/h	60	1409	0	46	866	900	49	0	0	123	0	73
Grp Sat Flow(s),veh/h/ln	1774	1770	0	1774	1770	1792	1587	0	0	1354	0	1583
Q Serve(g_s), s	1.0	0.0	0.0	0.8	31.6	33.2	0.0	0.0	0.0	8.4	0.0	6.5
Cycle Q Clear(g_c), s	1.0	0.0	0.0	0.8	31.6	33.2	4.3	0.0	0.0	12.7	0.0	6.5
Prop In Lane	1.00		0.00	1.00		0.22	0.06		0.94	1.00		1.00
Lane Grp Cap(c), veh/h	253	2770	0	395	1381	1398	188	0	0	193	0	162
V/C Ratio(X)	0.24	0.51	0.00	0.12	0.63	0.64	0.26	0.00	0.00	0.64	0.00	0.45
Avail Cap(c_a), veh/h	376	2770	0	522	1381	1398	372	0	0	352	0	348
HCM Platoon Ratio	2.00	2.00	2.00	1.00	1.00	1.00	1.00	1.00	1.00	1.00	1.00	1.00
Upstream Filter(I)	0.69	0.69	0.00	1.00	1.00	1.00	1.00	0.00	0.00	1.00	0.00	1.00
Uniform Delay (d), s/veh	7.2	0.0	0.0	2.8	7.1	7.3	62.4	0.0	0.0	65.9	0.0	63.4
Incr Delay (d2), s/veh	0.3	0.5	0.0	0.1	2.2	2.3	0.7	0.0	0.0	3.5	0.0	2.0
Initial Q Delay(d3),s/veh	0.0	0.0	0.0	0.0	0.0	0.0	0.0	0.0	0.0	0.0	0.0	0.0
%ile BackOfQ(50%),veh/ln	0.7	0.2	0.0	0.4	16.0	17.1	1.9	0.0	0.0	5.2	0.0	2.9
LnGrp Delay(d),s/veh	7.6	0.5	0.0	2.9	9.2	9.6	63.1	0.0	0.0	69.4	0.0	65.3
LnGrp LOS	A	A		A	A	A	E			E		E
Approach Vol, veh/h		1469			1812			49			196	
Approach Delay, s/veh		0.8			9.2			63.1			67.9	
Approach LOS		A			A			E			E	

Timer	1	2	3	4	5	6	7	8
Assigned Phs	1	2		4	5	6		8
Phs Duration (G+Y+Rc), s	7.6	122.1		20.3	7.3	122.4		20.3
Change Period (Y+Rc), s	3.0	5.0		5.0	3.0	5.0		5.0
Max Green Setting (Gmax), s	15.0	89.0		33.0	15.0	89.0		33.0
Max Q Clear Time (g_c+I1), s	3.0	35.2		6.3	2.8	2.0		14.7
Green Ext Time (p_c), s	0.1	21.2		0.2	0.1	15.6		0.7

Intersection Summary	
HCM 2010 Ctrl Delay	9.7
HCM 2010 LOS	A

Movement	EBL	EBT	EBR	WBL	WBT	WBR	NBL	NBT	NBR	SBL	SBT	SBR
Lane Configurations												
Traffic Volume (veh/h)	450	870	137	387	1065	86	347	855	295	205	930	291
Future Volume (veh/h)	450	870	137	387	1065	86	347	855	295	205	930	291
Number	3	8	18	7	4	14	1	6	16	5	2	12
Initial Q (Qb), veh	0	0	0	0	0	0	0	0	0	0	0	0
Ped-Bike Adj(A_pbT)	1.00		1.00	1.00		1.00	1.00		1.00	1.00		1.00
Parking Bus, Adj	1.00	1.00	1.00	1.00	1.00	1.00	1.00	1.00	1.00	1.00	1.00	1.00
Adj Sat Flow, veh/h/ln	1863	1863	1900	1863	1863	1900	1863	1863	1900	1863	1863	1900
Adj Flow Rate, veh/h	489	946	149	412	1133	91	361	891	307	214	969	303
Adj No. of Lanes	2	3	0	2	3	0	2	3	0	2	3	0
Peak Hour Factor	0.92	0.92	0.92	0.94	0.94	0.94	0.96	0.96	0.96	0.96	0.96	0.96
Percent Heavy Veh, %	2	2	2	2	2	2	2	2	2	2	2	2
Cap, veh/h	535	1221	192	465	1224	98	377	1409	484	262	1318	411
Arrive On Green	0.16	0.28	0.28	0.13	0.26	0.26	0.11	0.38	0.38	0.08	0.34	0.34
Sat Flow, veh/h	3442	4434	696	3442	4800	385	3442	3742	1285	3442	3842	1199
Grp Volume(v), veh/h	489	723	372	412	800	424	361	807	391	214	855	417
Grp Sat Flow(s),veh/h/ln	1721	1695	1740	1721	1695	1795	1721	1695	1636	1721	1695	1651
Q Serve(g_s), s	20.4	28.7	28.8	17.2	33.6	33.6	15.2	28.4	28.6	8.9	32.3	32.4
Cycle Q Clear(g_c), s	20.4	28.7	28.8	17.2	33.6	33.6	15.2	28.4	28.6	8.9	32.3	32.4
Prop In Lane	1.00		0.40	1.00		0.21	1.00		0.79	1.00		0.73
Lane Grp Cap(c), veh/h	535	934	479	465	865	458	377	1276	616	262	1163	566
V/C Ratio(X)	0.91	0.77	0.78	0.89	0.93	0.93	0.96	0.63	0.63	0.82	0.74	0.74
Avail Cap(c_a), veh/h	566	934	479	566	882	467	377	1276	616	377	1163	566
HCM Platoon Ratio	1.00	1.00	1.00	1.00	1.00	1.00	1.00	1.00	1.00	1.00	1.00	1.00
Upstream Filter(I)	1.00	1.00	1.00	1.00	1.00	1.00	1.00	1.00	1.00	1.00	1.00	1.00
Uniform Delay (d), s/veh	60.7	48.7	48.8	62.1	53.0	53.0	64.7	37.3	37.3	66.4	42.1	42.2
Incr Delay (d2), s/veh	18.7	4.1	7.9	13.1	15.2	24.3	34.9	2.4	4.9	5.9	4.2	8.3
Initial Q Delay(d3),s/veh	0.0	0.0	0.0	0.0	0.0	0.0	0.0	0.0	0.0	0.0	0.0	0.0
%ile BackOfQ(50%),veh/ln	11.1	14.0	14.9	9.0	17.6	19.8	9.1	13.8	13.8	4.5	15.9	16.1
LnGrp Delay(d),s/veh	79.4	52.8	56.6	75.2	68.2	77.4	99.6	39.6	42.2	72.3	46.3	50.5
LnGrp LOS	E	D	E	E	E	E	F	D	D	E	D	D
Approach Vol, veh/h		1584			1636			1559			1486	
Approach Delay, s/veh		61.9			72.3			54.2			51.2	
Approach LOS		E			E			D			D	

Timer	1	2	3	4	5	6	7	8
Assigned Phs	1	2	3	4	5	6	7	8
Phs Duration (G+Y+Rc), s	20.0	56.1	26.7	43.2	15.1	61.0	23.7	46.2
Change Period (Y+Rc), s	4.0	6.0	4.0	6.0	4.0	6.0	4.0	6.0
Max Green Setting (Gmax), s	16.0	48.0	24.0	38.0	16.0	48.0	24.0	38.0
Max Q Clear Time (g_c+I1), s	17.2	34.4	22.4	35.6	10.9	30.6	19.2	30.8
Green Ext Time (p_c), s	0.0	2.8	0.3	1.6	0.2	2.8	0.5	3.8

Intersection Summary	
HCM 2010 Ctrl Delay	60.2
HCM 2010 LOS	E

Movement	EBL	EBT	EBR	WBL	WBT	WBR	NBL	NBT	NBR	SBL	SBT	SBR
Lane Configurations												
Traffic Volume (veh/h)	204	1124	42	0	1177	144	180	73	7	88	29	181
Future Volume (veh/h)	204	1124	42	0	1177	144	180	73	7	88	29	181
Number	1	6	16	5	2	12	7	4	14	3	8	18
Initial Q (Qb), veh	0	0	0	0	0	0	0	0	0	0	0	0
Ped-Bike Adj(A_pbT)	1.00		1.00	1.00		1.00	1.00		1.00	1.00		1.00
Parking Bus, Adj	1.00	1.00	1.00	1.00	1.00	1.00	1.00	1.00	1.00	1.00	1.00	1.00
Adj Sat Flow, veh/h/ln	1863	1863	1900	0	1863	1900	1863	1863	1863	1863	1863	1863
Adj Flow Rate, veh/h	212	1171	44	0	1266	155	207	84	8	96	32	197
Adj No. of Lanes	1	2	0	0	2	0	1	1	1	1	1	1
Peak Hour Factor	0.96	0.96	0.96	0.93	0.93	0.93	0.87	0.87	0.87	0.92	0.92	0.92
Percent Heavy Veh, %	2	2	2	0	2	2	2	2	2	2	2	2
Cap, veh/h	99	2474	93	0	1977	241	187	238	202	99	404	343
Arrive On Green	0.06	0.71	0.71	0.00	0.62	0.62	0.13	0.13	0.13	0.06	0.22	0.22
Sat Flow, veh/h	1774	3479	131	0	3270	387	1147	1863	1583	1774	1863	1583
Grp Volume(v), veh/h	212	595	620	0	703	718	207	84	8	96	32	197
Grp Sat Flow(s),veh/h/ln	1774	1770	1840	0	1770	1794	1147	1863	1583	1774	1863	1583
Q Serve(g_s), s	10.0	26.4	26.4	0.0	44.8	45.4	23.0	7.4	0.8	9.7	2.5	20.0
Cycle Q Clear(g_c), s	10.0	26.4	26.4	0.0	44.8	45.4	23.0	7.4	0.8	9.7	2.5	20.0
Prop In Lane	1.00		0.07	0.00		0.22	1.00		1.00	1.00		1.00
Lane Grp Cap(c), veh/h	99	1258	1308	0	1101	1117	187	238	202	99	404	343
V/C Ratio(X)	2.15	0.47	0.47	0.00	0.64	0.64	1.11	0.35	0.04	0.97	0.08	0.57
Avail Cap(c_a), veh/h	99	1258	1308	0	1101	1117	187	238	202	99	404	343
HCM Platoon Ratio	1.00	1.00	1.00	1.00	1.00	1.00	1.00	1.00	1.00	1.00	1.00	1.00
Upstream Filter(I)	1.00	1.00	1.00	0.00	1.00	1.00	1.00	1.00	1.00	1.00	1.00	1.00
Uniform Delay (d), s/veh	85.0	11.3	11.3	0.0	21.3	21.4	81.0	71.7	68.8	84.9	56.2	63.1
Incr Delay (d2), s/veh	550.1	1.3	1.2	0.0	2.8	2.9	98.3	4.1	0.4	81.7	0.4	6.8
Initial Q Delay(d3),s/veh	0.0	0.0	0.0	0.0	0.0	0.0	0.0	0.0	0.0	0.0	0.0	0.0
%ile BackOfQ(50%),veh/ln	20.0	13.2	13.7	0.0	22.7	23.2	14.4	4.1	0.4	7.0	1.3	9.4
LnGrp Delay(d),s/veh	635.1	12.6	12.6	0.0	24.1	24.3	179.3	75.8	69.2	166.5	56.6	69.9
LnGrp LOS	F	B	B		C	C	F	E	E	F	E	E
Approach Vol, veh/h		1427			1421			299			325	
Approach Delay, s/veh		105.1			24.2			147.3			97.1	
Approach LOS		F			C			F			F	

Timer	1	2	3	4	5	6	7	8
Assigned Phs	1	2	3	4		6		8
Phs Duration (G+Y+Rc), s	16.0	118.0	16.0	30.0		134.0		46.0
Change Period (Y+Rc), s	6.0	6.0	6.0	7.0		6.0		7.0
Max Green Setting (Gmax), s	10.0	112.0	10.0	23.0		128.0		39.0
Max Q Clear Time (g_c+I1), s	12.0	47.4	11.7	25.0		28.4		22.0
Green Ext Time (p_c), s	0.0	3.2	0.0	0.0		2.5		0.5

Intersection Summary	
HCM 2010 Ctrl Delay	74.9
HCM 2010 LOS	E

Intersection	
Int Delay, s/veh	1.8

Movement	EBL	EBT	EBR	WBL	WBT	WBR	NBL	NBT	NBR	SBL	SBT	SBR
Lane Configurations												
Traffic Vol, veh/h	17	1000	202	63	1258	28	0	0	152	4	0	63
Future Vol, veh/h	17	1000	202	63	1258	28	0	0	152	4	0	63
Conflicting Peds, #/hr	0	0	0	0	0	0	0	0	0	0	0	0
Sign Control	Free	Free	Free	Free	Free	Free	Stop	Stop	Stop	Stop	Stop	Stop
RT Channelized	-	-	None	-	-	None	-	-	None	-	-	None
Storage Length	-	-	-	300	-	-	-	-	0	-	-	0
Veh in Median Storage, #	-	0	-	-	0	-	-	0	-	-	0	-
Grade, %	-	0	-	-	0	-	-	0	-	-	0	-
Peak Hour Factor	92	92	92	92	92	92	92	92	92	92	92	92
Heavy Vehicles, %	2	2	2	2	2	2	2	2	2	2	2	2
Mvmt Flow	18	1087	220	68	1367	30	0	0	165	4	0	68

Major/Minor	Major1			Major2			Minor1			Minor2		
Conflicting Flow All	1397	0	0	1307	0	0	-	-	654	2098	-	699
Stage 1	-	-	-	-	-	-	-	-	-	1518	-	-
Stage 2	-	-	-	-	-	-	-	-	-	580	-	-
Critical Hdwy	4.14	-	-	4.14	-	-	-	-	6.94	7.54	-	6.94
Critical Hdwy Stg 1	-	-	-	-	-	-	-	-	-	6.54	-	-
Critical Hdwy Stg 2	-	-	-	-	-	-	-	-	-	6.54	-	-
Follow-up Hdwy	2.22	-	-	2.22	-	-	-	-	3.32	3.52	-	3.32
Pot Cap-1 Maneuver	485	-	-	525	-	-	0	0	409	30	0	382
Stage 1	-	-	-	-	-	-	0	0	-	125	0	-
Stage 2	-	-	-	-	-	-	0	0	-	467	0	-
Platoon blocked, %		-	-		-	-						
Mov Cap-1 Maneuver	485	-	-	525	-	-	-	-	409	16	-	382
Mov Cap-2 Maneuver	-	-	-	-	-	-	-	-	-	16	-	-
Stage 1	-	-	-	-	-	-	-	-	-	120	-	-
Stage 2	-	-	-	-	-	-	-	-	-	268	-	-

Approach	EB	WB	NB	SB
HCM Control Delay, s	0.2	0.6	19.6	16.5
HCM LOS			C	C

Minor Lane/Major Mvmt	NBLn1	EBL	EBT	EBR	WBL	WBT	WBR	SBLn1
Capacity (veh/h)	409	485	-	-	525	-	-	382
HCM Lane V/C Ratio	0.404	0.038	-	-	0.13	-	-	0.179
HCM Control Delay (s)	19.6	12.7	-	-	12.9	-	-	16.5
HCM Lane LOS	C	B	-	-	B	-	-	C
HCM 95th %tile Q(veh)	1.9	0.1	-	-	0.4	-	-	0.6

Intersection	
Int Delay, s/veh	33.2

Movement	EBT	EBR	WBL	WBT	NBL	NBR
Lane Configurations						
Traffic Vol, veh/h	1044	110	75	1252	97	120
Future Vol, veh/h	1044	110	75	1252	97	120
Conflicting Peds, #/hr	0	0	0	0	0	0
Sign Control	Free	Free	Free	Free	Stop	Stop
RT Channelized	-	None	-	None	-	None
Storage Length	-	-	200	-	0	0
Veh in Median Storage, #	0	-	-	0	0	-
Grade, %	0	-	-	0	0	-
Peak Hour Factor	92	92	92	92	92	92
Heavy Vehicles, %	2	2	2	2	2	2
Mvmt Flow	1135	120	82	1361	105	130

Major/Minor	Major1		Major2		Minor1	
Conflicting Flow All	0	0	1255	0	2040	628
Stage 1	-	-	-	-	1195	-
Stage 2	-	-	-	-	845	-
Critical Hdwy	-	-	4.14	-	6.84	6.94
Critical Hdwy Stg 1	-	-	-	-	5.84	-
Critical Hdwy Stg 2	-	-	-	-	5.84	-
Follow-up Hdwy	-	-	2.22	-	3.52	3.32
Pot Cap-1 Maneuver	-	-	550	-	~ 49	426
Stage 1	-	-	-	-	250	-
Stage 2	-	-	-	-	382	-
Platoon blocked, %	-	-		-		
Mov Cap-1 Maneuver	-	-	550	-	~ 42	426
Mov Cap-2 Maneuver	-	-	-	-	~ 42	-
Stage 1	-	-	-	-	250	-
Stage 2	-	-	-	-	325	-

Approach	EB	WB	NB
HCM Control Delay, s	0	0.7	$ 407.9
HCM LOS			F

Minor Lane/Major Mvmt	NBLn1	NBLn2	EBT	EBR	WBL	WBT
Capacity (veh/h)	42	426	-	-	550	-
HCM Lane V/C Ratio	2.51	0.306	-	-	0.148	-
HCM Control Delay (s)	$ 891.3	17.1	-	-	12.7	-
HCM Lane LOS	F	C	-	-	B	-
HCM 95th %tile Q(veh)	11.4	1.3	-	-	0.5	-

Notes			
~: Volume exceeds capacity	$: Delay exceeds 300s	+: Computation Not Defined	*: All major volume in platoon

Movement	EBL	EBT	EBR	WBL	WBT	WBR	NBL	NBT	NBR	SBL	SBT	SBR
Lane Configurations												
Traffic Volume (veh/h)	424	559	181	269	513	324	570	1596	301	345	1031	244
Future Volume (veh/h)	424	559	181	269	513	324	570	1596	301	345	1031	244
Number	3	8	18	7	4	14	1	6	16	5	2	12
Initial Q (Qb), veh	0	0	0	0	0	0	0	0	0	0	0	0
Ped-Bike Adj(A_pbT)	1.00		1.00	1.00		1.00	1.00		1.00	1.00		1.00
Parking Bus, Adj	1.00	1.00	1.00	1.00	1.00	1.00	1.00	1.00	1.00	1.00	1.00	1.00
Adj Sat Flow, veh/h/ln	1863	1863	1863	1863	1863	1863	1863	1863	1900	1863	1863	1900
Adj Flow Rate, veh/h	461	608	197	292	558	352	620	1735	327	375	1121	265
Adj No. of Lanes	2	3	1	2	3	1	2	3	0	2	3	0
Peak Hour Factor	0.92	0.92	0.92	0.92	0.92	0.92	0.92	0.92	0.92	0.92	0.92	0.92
Percent Heavy Veh, %	2	2	2	2	2	2	2	2	2	2	2	2
Cap, veh/h	449	1074	594	294	846	456	565	2003	374	418	1736	410
Arrive On Green	0.13	0.21	0.21	0.09	0.17	0.17	0.16	0.47	0.47	0.12	0.42	0.42
Sat Flow, veh/h	3442	5085	1583	3442	5085	1583	3442	4308	804	3442	4110	971
Grp Volume(v), veh/h	461	608	197	292	558	352	620	1362	700	375	925	461
Grp Sat Flow(s),veh/h/ln	1721	1695	1583	1721	1695	1583	1721	1695	1721	1721	1695	1691
Q Serve(g_s), s	23.2	19.1	15.8	15.1	18.3	29.6	29.2	63.9	65.3	19.1	38.6	38.6
Cycle Q Clear(g_c), s	23.2	19.1	15.8	15.1	18.3	29.6	29.2	63.9	65.3	19.1	38.6	38.6
Prop In Lane	1.00		1.00	1.00		1.00	1.00		0.47	1.00		0.57
Lane Grp Cap(c), veh/h	449	1074	594	294	846	456	565	1577	800	418	1432	715
V/C Ratio(X)	1.03	0.57	0.33	0.99	0.66	0.77	1.10	0.86	0.88	0.90	0.65	0.65
Avail Cap(c_a), veh/h	449	1074	594	294	846	456	565	1577	800	565	1432	715
HCM Platoon Ratio	1.00	1.00	1.00	1.00	1.00	1.00	1.00	1.00	1.00	1.00	1.00	1.00
Upstream Filter(I)	1.00	1.00	1.00	1.00	1.00	1.00	1.00	1.00	1.00	1.00	1.00	1.00
Uniform Delay (d), s/veh	77.4	62.9	39.7	81.4	69.5	58.1	74.4	42.6	43.0	77.1	40.8	40.8
Incr Delay (d2), s/veh	49.8	0.6	0.2	50.6	1.8	7.7	67.5	6.5	12.8	11.5	2.3	4.5
Initial Q Delay(d3),s/veh	0.0	0.0	0.0	0.0	0.0	0.0	0.0	0.0	0.0	0.0	0.0	0.0
%ile BackOfQ(50%),veh/ln	14.1	9.0	6.9	9.2	8.7	16.8	19.2	31.3	34.0	9.8	18.4	18.8
LnGrp Delay(d),s/veh	127.2	63.5	39.9	131.9	71.2	65.8	141.9	49.1	55.8	88.6	43.1	45.3
LnGrp LOS	F	E	D	F	E	E	F	D	E	F	D	D
Approach Vol, veh/h		1266			1202			2682			1761	
Approach Delay, s/veh		83.0			84.4			72.3			53.3	
Approach LOS		F			F			E			D	

Timer	1	2	3	4	5	6	7	8
Assigned Phs	1	2	3	4	5	6	7	8
Phs Duration (G+Y+Rc), s	34.0	81.0	28.0	35.0	26.4	88.6	20.0	43.0
Change Period (Y+Rc), s	* 4.8	* 5.8	* 4.8	* 5.4	* 4.8	* 5.8	* 4.8	* 5.4
Max Green Setting (Gmax), s	* 29	* 75	* 23	* 30	* 29	* 75	* 15	* 38
Max Q Clear Time (g_c+I1), s	31.2	40.6	25.2	31.6	21.1	67.3	17.1	21.1
Green Ext Time (p_c), s	0.0	4.3	0.0	0.0	0.5	4.3	0.0	3.4

Intersection Summary	
HCM 2010 Ctrl Delay	71.5
HCM 2010 LOS	E

Notes

* HCM 2010 computational engine requires equal clearance times for the phases crossing the barrier.

No Build 2020

Movement	EBL	EBT	EBR	WBL	WBT	WBR	NBL	NBT	NBR	SBL	SBT	SBR
Lane Configurations												
Traffic Volume (veh/h)	294	537	425	197	1962	44	739	361	146	95	308	620
Future Volume (veh/h)	294	537	425	197	1962	44	739	361	146	95	308	620
Number	1	6	16	5	2	12	7	4	14	3	8	18
Initial Q (Qb), veh	0	0	0	0	0	0	0	0	0	0	0	0
Ped-Bike Adj(A_pbT)	1.00		1.00	1.00		1.00	1.00		1.00	1.00		1.00
Parking Bus, Adj	1.00	1.00	1.00	1.00	1.00	1.00	1.00	1.00	1.00	1.00	1.00	1.00
Adj Sat Flow, veh/h/ln	1863	1863	1863	1863	1863	1900	1863	1863	1900	1863	1863	1900
Adj Flow Rate, veh/h	320	584	462	207	2065	46	795	388	157	103	335	674
Adj No. of Lanes	2	2	1	1	3	0	1	2	0	1	2	0
Peak Hour Factor	0.92	0.92	0.92	0.95	0.95	0.95	0.93	0.93	0.93	0.92	0.92	0.92
Percent Heavy Veh, %	2	2	2	2	2	2	2	2	2	2	2	2
Cap, veh/h	268	1092	928	295	1649	37	533	982	392	296	315	281
Arrive On Green	0.08	0.31	0.31	0.09	0.32	0.32	0.28	0.40	0.40	0.06	0.18	0.18
Sat Flow, veh/h	3442	3539	1583	1774	5119	114	1774	2471	987	1774	1770	1583
Grp Volume(v), veh/h	320	584	462	207	1367	744	795	276	269	103	335	674
Grp Sat Flow(s),veh/h/ln	1721	1770	1583	1774	1695	1843	1774	1770	1689	1774	1770	1583
Q Serve(g_s), s	14.0	24.6	30.7	14.3	58.0	58.0	50.0	20.1	20.5	8.5	32.0	32.0
Cycle Q Clear(g_c), s	14.0	24.6	30.7	14.3	58.0	58.0	50.0	20.1	20.5	8.5	32.0	32.0
Prop In Lane	1.00		1.00	1.00		0.06	1.00		0.58	1.00		1.00
Lane Grp Cap(c), veh/h	268	1092	928	295	1092	594	533	703	671	296	315	281
V/C Ratio(X)	1.20	0.53	0.50	0.70	1.25	1.25	1.49	0.39	0.40	0.35	1.06	2.39
Avail Cap(c_a), veh/h	268	1092	928	398	1092	594	533	703	671	301	315	281
HCM Platoon Ratio	1.00	1.00	1.00	1.00	1.00	1.00	1.00	1.00	1.00	1.00	1.00	1.00
Upstream Filter(I)	1.00	1.00	1.00	1.00	1.00	1.00	1.00	1.00	1.00	1.00	1.00	1.00
Uniform Delay (d), s/veh	83.0	51.5	21.7	39.4	61.0	61.0	55.9	38.7	38.9	55.8	74.0	74.0
Incr Delay (d2), s/veh	118.5	1.9	1.9	1.7	120.6	127.6	231.3	1.6	1.8	0.3	68.9	638.3
Initial Q Delay(d3),s/veh	0.0	0.0	0.0	0.0	0.0	0.0	0.0	0.0	0.0	0.0	0.0	0.0
%ile BackOfQ(50%),veh/ln	11.1	12.3	13.9	7.1	45.5	50.6	60.7	10.1	9.9	4.2	21.7	63.9
LnGrp Delay(d),s/veh	201.5	53.4	23.7	41.1	181.6	188.6	287.2	40.4	40.7	56.0	142.9	712.3
LnGrp LOS	F	D	C	D	F	F	F	D	D	E	F	F
Approach Vol, veh/h		1366			2318			1340			1112	
Approach Delay, s/veh		78.0			171.3			186.9			480.0	
Approach LOS		E			F			F			F	

Timer	1	2	3	4	5	6	7	8
Assigned Phs	1	2	3	4	5	6	7	8
Phs Duration (G+Y+Rc), s	20.0	64.0	17.5	78.5	22.5	61.5	57.0	39.0
Change Period (Y+Rc), s	6.0	6.0	7.0	7.0	6.0	6.0	7.0	7.0
Max Green Setting (Gmax), s	14.0	58.0	11.0	71.0	27.0	45.0	50.0	32.0
Max Q Clear Time (g_c+I1), s	16.0	60.0	10.5	22.5	16.3	32.7	52.0	34.0
Green Ext Time (p_c), s	0.0	0.0	0.0	3.0	0.2	1.4	0.0	0.0

Intersection Summary	
HCM 2010 Ctrl Delay	209.9
HCM 2010 LOS	F

Intersection	
Int Delay, s/veh	2.2

Movement	EBL	EBT	WBT	WBR	SBL	SBR
Lane Configurations						
Traffic Vol, veh/h	0	778	2101	19	0	102
Future Vol, veh/h	0	778	2101	19	0	102
Conflicting Peds, #/hr	0	0	0	0	0	0
Sign Control	Free	Free	Free	Free	Stop	Stop
RT Channelized	-	None	-	None	-	None
Storage Length	-	-	-	50	-	0
Veh in Median Storage, #	-	0	0	-	0	-
Grade, %	-	0	0	-	0	-
Peak Hour Factor	92	92	92	92	92	92
Heavy Vehicles, %	2	2	2	2	2	2
Mvmt Flow	0	846	2284	21	0	111

Major/Minor	Major1		Major2		Minor2	
Conflicting Flow All	-	0	-	0	-	1153
Stage 1	-	-	-	-	-	-
Stage 2	-	-	-	-	-	-
Critical Hdwy	-	-	-	-	-	7.14
Critical Hdwy Stg 1	-	-	-	-	-	-
Critical Hdwy Stg 2	-	-	-	-	-	-
Follow-up Hdwy	-	-	-	-	-	3.92
Pot Cap-1 Maneuver	0	-	-	-	0	164
Stage 1	0	-	-	-	0	-
Stage 2	0	-	-	-	0	-
Platoon blocked, %		-	-	-		
Mov Cap-1 Maneuver	-	-	-	-	-	164
Mov Cap-2 Maneuver	-	-	-	-	-	-
Stage 1	-	-	-	-	-	-
Stage 2	-	-	-	-	-	-

Approach	EB	WB	SB
HCM Control Delay, s	0	0	63.6
HCM LOS			F

Minor Lane/Major Mvmt	EBT	WBT	WBR	SBLn1
Capacity (veh/h)	-	-	-	164
HCM Lane V/C Ratio	-	-	-	0.676
HCM Control Delay (s)	-	-	-	63.6
HCM Lane LOS	-	-	-	F
HCM 95th %tile Q(veh)	-	-	-	3.9

Intersection	
Int Delay, s/veh	27.4

Movement	EBT	EBR	WBL	WBT	NBL	NBR
Lane Configurations						
Traffic Vol, veh/h	778	0	0	2004	116	57
Future Vol, veh/h	778	0	0	2004	116	57
Conflicting Peds, #/hr	0	0	0	0	0	0
Sign Control	Free	Free	Free	Free	Stop	Stop
RT Channelized	-	None	-	None	-	None
Storage Length	-	-	-	-	0	50
Veh in Median Storage, #	0	-	-	0	0	-
Grade, %	0	-	-	0	0	-
Peak Hour Factor	92	92	92	92	92	92
Heavy Vehicles, %	2	2	2	2	2	2
Mvmt Flow	846	0	0	2178	126	62

Major/Minor	Major1		Major2		Minor1	
Conflicting Flow All	0	-	-	-	1935	423
Stage 1	-	-	-	-	846	-
Stage 2	-	-	-	-	1089	-
Critical Hdwy	-	-	-	-	6.84	6.94
Critical Hdwy Stg 1	-	-	-	-	5.84	-
Critical Hdwy Stg 2	-	-	-	-	5.84	-
Follow-up Hdwy	-	-	-	-	3.52	3.32
Pot Cap-1 Maneuver	-	0	0	-	~ 58	579
Stage 1	-	0	0	-	381	-
Stage 2	-	0	0	-	284	-
Platoon blocked, %	-			-		
Mov Cap-1 Maneuver	-	-	-	-	~ 58	579
Mov Cap-2 Maneuver	-	-	-	-	~ 58	-
Stage 1	-	-	-	-	381	-
Stage 2	-	-	-	-	284	-

Approach	EB	WB	NB
HCM Control Delay, s	0	0	$ 468.2
HCM LOS			F

Minor Lane/Major Mvmt	NBLn1	NBLn2	EBT	WBT
Capacity (veh/h)	58	579	-	-
HCM Lane V/C Ratio	2.174	0.107	-	-
HCM Control Delay (s)	$ 692.4	12	-	-
HCM Lane LOS	F	B	-	-
HCM 95th %tile Q(veh)	12.3	0.4	-	-

Notes			
~: Volume exceeds capacity	$: Delay exceeds 300s	+: Computation Not Defined	*: All major volume in platoon

Intersection	
Int Delay, s/veh	0.1

Movement	EBL	EBT	WBT	WBR	SBL	SBR
Lane Configurations						
Traffic Vol, veh/h	0	835	1991	2	0	13
Future Vol, veh/h	0	835	1991	2	0	13
Conflicting Peds, #/hr	0	0	0	0	0	0
Sign Control	Free	Free	Free	Free	Stop	Stop
RT Channelized	-	None	-	None	-	None
Storage Length	-	-	-	-	-	0
Veh in Median Storage, #	-	0	0	-	0	-
Grade, %	-	0	0	-	0	-
Peak Hour Factor	92	92	92	92	92	92
Heavy Vehicles, %	2	2	2	2	2	2
Mvmt Flow	0	908	2164	2	0	14

Major/Minor	Major1		Major2		Minor2	
Conflicting Flow All	-	0	-	0	-	1083
Stage 1	-	-	-	-	-	-
Stage 2	-	-	-	-	-	-
Critical Hdwy	-	-	-	-	-	6.94
Critical Hdwy Stg 1	-	-	-	-	-	-
Critical Hdwy Stg 2	-	-	-	-	-	-
Follow-up Hdwy	-	-	-	-	-	3.32
Pot Cap-1 Maneuver	0	-	-	-	0	213
Stage 1	0	-	-	-	0	-
Stage 2	0	-	-	-	0	-
Platoon blocked, %		-	-	-		
Mov Cap-1 Maneuver	-	-	-	-	-	213
Mov Cap-2 Maneuver	-	-	-	-	-	-
Stage 1	-	-	-	-	-	-
Stage 2	-	-	-	-	-	-

Approach	EB	WB	SB
HCM Control Delay, s	0	0	23.1
HCM LOS			C

Minor Lane/Major Mvmt	EBT	WBT	WBR	SBLn1
Capacity (veh/h)	-	-	-	213
HCM Lane V/C Ratio	-	-	-	0.066
HCM Control Delay (s)	-	-	-	23.1
HCM Lane LOS	-	-	-	C
HCM 95th %tile Q(veh)	-	-	-	0.2

Movement	EBL	EBT	EBR	WBL	WBT	WBR	NBL	NBT	NBR	SBL	SBT	SBR
Lane Configurations												
Traffic Volume (veh/h)	113	602	120	228	1501	140	306	86	112	132	214	186
Future Volume (veh/h)	113	602	120	228	1501	140	306	86	112	132	214	186
Number	1	6	16	5	2	12	7	4	14	3	8	18
Initial Q (Qb), veh	0	0	0	0	0	0	0	0	0	0	0	0
Ped-Bike Adj(A_pbT)	1.00		1.00	1.00		1.00	1.00		1.00	1.00		1.00
Parking Bus, Adj	1.00	1.00	1.00	1.00	1.00	1.00	1.00	1.00	1.00	1.00	1.00	1.00
Adj Sat Flow, veh/h/ln	1863	1863	1900	1863	1863	1900	1863	1863	1863	1863	1863	1863
Adj Flow Rate, veh/h	127	676	135	253	1668	156	382	108	140	159	258	224
Adj No. of Lanes	1	2	0	1	2	0	1	1	1	1	1	1
Peak Hour Factor	0.89	0.89	0.89	0.90	0.90	0.90	0.80	0.80	0.80	0.83	0.83	0.83
Percent Heavy Veh, %	2	2	2	2	2	2	2	2	2	2	2	2
Cap, veh/h	224	1275	254	449	1740	161	350	463	394	341	290	246
Arrive On Green	0.05	0.43	0.43	0.26	1.00	1.00	0.16	0.25	0.25	0.07	0.16	0.16
Sat Flow, veh/h	1774	2942	587	1774	3276	303	1774	1863	1583	1774	1863	1583
Grp Volume(v), veh/h	127	406	405	253	892	932	382	108	140	159	258	224
Grp Sat Flow(s),veh/h/ln	1774	1770	1759	1774	1770	1809	1774	1863	1583	1774	1863	1583
Q Serve(g_s), s	6.6	25.3	25.4	0.0	0.0	0.0	24.0	6.9	8.1	10.0	20.4	20.9
Cycle Q Clear(g_c), s	6.6	25.3	25.4	0.0	0.0	0.0	24.0	6.9	8.1	10.0	20.4	20.9
Prop In Lane	1.00		0.33	1.00		0.17	1.00		1.00	1.00		1.00
Lane Grp Cap(c), veh/h	224	767	762	449	940	961	350	463	394	341	290	246
V/C Ratio(X)	0.57	0.53	0.53	0.56	0.95	0.97	1.09	0.23	0.36	0.47	0.89	0.91
Avail Cap(c_a), veh/h	224	767	762	453	940	961	350	484	412	341	310	264
HCM Platoon Ratio	1.00	1.00	1.00	2.00	2.00	2.00	1.00	1.00	1.00	1.00	1.00	1.00
Upstream Filter(I)	1.00	1.00	1.00	0.09	0.09	0.09	1.00	1.00	1.00	1.00	1.00	1.00
Uniform Delay (d), s/veh	26.6	31.3	31.3	35.6	0.0	0.0	44.6	44.9	25.2	49.9	62.1	62.3
Incr Delay (d2), s/veh	2.1	2.6	2.6	0.1	2.8	4.2	75.2	0.2	0.4	0.4	24.3	31.2
Initial Q Delay(d3),s/veh	0.0	0.0	0.0	0.0	0.0	0.0	0.0	0.0	0.0	0.0	0.0	0.0
%ile BackOfQ(50%),veh/ln	3.3	13.0	12.9	7.8	0.7	1.1	19.3	3.6	4.4	5.6	12.4	11.3
LnGrp Delay(d),s/veh	28.7	33.9	33.9	35.7	2.8	4.2	119.8	45.1	25.6	50.3	86.4	93.5
LnGrp LOS	C	C	C	D	A	A	F	D	C	D	F	F
Approach Vol, veh/h		938			2077			630			641	
Approach Delay, s/veh		33.2			7.4			86.1			79.9	
Approach LOS		C			A			F			E	

Timer	1	2	3	4	5	6	7	8
Assigned Phs	1	2	3	4	5	6	7	8
Phs Duration (G+Y+Rc), s	10.0	84.7	13.0	42.3	24.7	70.0	27.0	28.3
Change Period (Y+Rc), s	3.0	5.0	3.0	5.0	5.0	* 5	3.0	5.0
Max Green Setting (Gmax), s	7.0	78.0	10.0	39.0	20.0	* 65	24.0	25.0
Max Q Clear Time (g_c+I1), s	8.6	2.0	12.0	10.1	2.0	27.4	26.0	22.9
Green Ext Time (p_c), s	0.0	5.0	0.0	0.8	0.3	1.6	0.0	0.4

Intersection Summary	
HCM 2010 Ctrl Delay	35.5
HCM 2010 LOS	D

Notes

* HCM 2010 computational engine requires equal clearance times for the phases crossing the barrier.

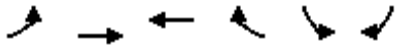

Movement	EBL	EBT	WBT	WBR	SBL	SBR
Lane Configurations						
Traffic Volume (veh/h)	112	734	1660	394	390	236
Future Volume (veh/h)	112	734	1660	394	390	236
Number	1	6	2	12	3	18
Initial Q (Qb), veh	0	0	0	0	0	0
Ped-Bike Adj(A_pbT)	1.00			1.00	1.00	1.00
Parking Bus, Adj	1.00	1.00	1.00	1.00	1.00	1.00
Adj Sat Flow, veh/h/ln	1863	1863	1863	1900	1863	1863
Adj Flow Rate, veh/h	129	844	1865	443	406	246
Adj No. of Lanes	1	2	2	0	1	1
Peak Hour Factor	0.87	0.87	0.89	0.89	0.96	0.96
Percent Heavy Veh, %	2	2	2	2	2	2
Cap, veh/h	258	2754	1794	410	402	546
Arrive On Green	0.24	1.00	0.63	0.63	0.23	0.23
Sat Flow, veh/h	1774	3632	2956	654	1774	1583
Grp Volume(v), veh/h	129	844	1124	1184	406	246
Grp Sat Flow(s),veh/h/ln	1774	1770	1770	1747	1774	1583
Q Serve(g_s), s	5.0	0.0	94.0	94.0	34.0	0.4
Cycle Q Clear(g_c), s	5.0	0.0	94.0	94.0	34.0	0.4
Prop In Lane	1.00			0.37	1.00	1.00
Lane Grp Cap(c), veh/h	258	2754	1109	1095	402	546
V/C Ratio(X)	0.50	0.31	1.01	1.08	1.01	0.45
Avail Cap(c_a), veh/h	258	2754	1109	1095	402	546
HCM Platoon Ratio	2.00	2.00	1.00	1.00	1.00	1.00
Upstream Filter(I)	0.87	0.87	1.00	1.00	1.00	1.00
Uniform Delay (d), s/veh	51.5	0.0	28.0	28.0	58.0	38.1
Incr Delay (d2), s/veh	1.0	0.2	30.5	51.8	47.3	0.4
Initial Q Delay(d3),s/veh	0.0	0.0	0.0	0.0	0.0	0.0
%ile BackOfQ(50%),veh/ln	4.5	0.1	55.0	60.8	21.9	7.9
LnGrp Delay(d),s/veh	52.5	0.2	58.5	79.8	105.4	38.5
LnGrp LOS	D	A	F	F	F	D
Approach Vol, veh/h		973	2308		652	
Approach Delay, s/veh		7.2	69.5		80.2	
Approach LOS		A	E		F	

Timer	1	2	3	4	5	6	7	8
Assigned Phs	1	2				6		8
Phs Duration (G+Y+Rc), s	22.7	99.0				121.7		39.0
Change Period (Y+Rc), s	5.0	* 5				5.0		5.0
Max Green Setting (Gmax), s	9.6	* 94				106.0		34.0
Max Q Clear Time (g_c+I1), s	7.0	96.0				2.0		36.0
Green Ext Time (p_c), s	0.0	0.0				2.1		0.0

Intersection Summary	
HCM 2010 Ctrl Delay	55.8
HCM 2010 LOS	E

Notes

* HCM 2010 computational engine requires equal clearance times for the phases crossing the barrier.

Intersection	
Int Delay, s/veh	15.2

Movement	EBL	EBT	WBT	WBR	SBL	SBR
Lane Configurations						
Traffic Vol, veh/h	36	1088	1902	6	9	152
Future Vol, veh/h	36	1088	1902	6	9	152
Conflicting Peds, #/hr	0	0	0	0	0	0
Sign Control	Free	Free	Free	Free	Stop	Stop
RT Channelized	-	None	-	None	-	None
Storage Length	100	-	-	-	0	-
Veh in Median Storage, #	-	0	0	-	0	-
Grade, %	-	0	0	-	0	-
Peak Hour Factor	92	92	92	92	92	92
Heavy Vehicles, %	2	2	2	2	2	2
Mvmt Flow	39	1183	2067	7	10	165

Major/Minor	Major1		Major2		Minor2	
Conflicting Flow All	2074	0	-	0	2741	1037
Stage 1	-	-	-	-	2071	-
Stage 2	-	-	-	-	670	-
Critical Hdwy	4.14	-	-	-	6.84	6.94
Critical Hdwy Stg 1	-	-	-	-	5.84	-
Critical Hdwy Stg 2	-	-	-	-	5.84	-
Follow-up Hdwy	2.22	-	-	-	3.52	3.32
Pot Cap-1 Maneuver	265	-	-	-	16	228
Stage 1	-	-	-	-	83	-
Stage 2	-	-	-	-	470	-
Platoon blocked, %		-	-	-		
Mov Cap-1 Maneuver	265	-	-	-	14	228
Mov Cap-2 Maneuver	-	-	-	-	14	-
Stage 1	-	-	-	-	71	-
Stage 2	-	-	-	-	470	-

Approach	EB	WB	SB
HCM Control Delay, s	0.7	0	296.1
HCM LOS			F

Minor Lane/Major Mvmt	EBL	EBT	WBT	WBR	SBLn1
Capacity (veh/h)	265	-	-	-	123
HCM Lane V/C Ratio	0.148	-	-	-	1.423
HCM Control Delay (s)	20.9	-	-	-	296.1
HCM Lane LOS	C	-	-	-	F
HCM 95th %tile Q(veh)	0.5	-	-	-	12

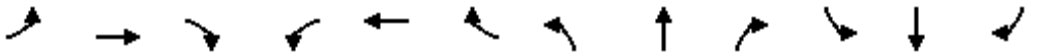

Movement	EBL	EBT	EBR	WBL	WBT	WBR	NBL	NBT	NBR	SBL	SBT	SBR
Lane Configurations												
Traffic Volume (vph)	51	1001	45	11	1720	25	124	5	24	66	25	64
Future Volume (vph)	51	1001	45	11	1720	25	124	5	24	66	25	64
Ideal Flow (vphpl)	1900	1900	1900	1900	1900	1900	1900	1900	1900	1900	1900	1900
Total Lost time (s)	6.0	6.0		6.0	6.0			7.0	7.0		7.0	7.0
Lane Util. Factor	1.00	0.95		1.00	0.95			1.00	1.00		1.00	1.00
Frt	1.00	0.99		1.00	1.00			1.00	0.85		1.00	0.85
Flt Protected	0.95	1.00		0.95	1.00			0.95	1.00		0.96	1.00
Satd. Flow (prot)	1770	3516		1770	3532			1777	1583		1797	1583
Flt Permitted	0.04	1.00		0.20	1.00			0.95	1.00		0.96	1.00
Satd. Flow (perm)	71	3516		367	3532			1777	1583		1797	1583
Peak-hour factor, PHF	0.88	0.88	0.88	0.95	0.95	0.95	0.77	0.77	0.77	0.55	0.55	0.55
Adj. Flow (vph)	58	1138	51	12	1811	26	161	6	31	120	45	116
RTOR Reduction (vph)	0	2	0	0	0	0	0	0	28	0	0	103
Lane Group Flow (vph)	58	1187	0	12	1837	0	0	167	3	0	165	13
Turn Type	pm+pt	NA		pm+pt	NA		Split	NA	Perm	Split	NA	Perm
Protected Phases	1	6		5	2		4	4		3	3	
Permitted Phases	6			2					4			3
Actuated Green, G (s)	111.9	111.9		107.5	107.5			20.3	20.3		19.8	19.8
Effective Green, g (s)	111.9	111.9		107.5	107.5			20.3	20.3		19.8	19.8
Actuated g/C Ratio	0.62	0.62		0.60	0.60			0.11	0.11		0.11	0.11
Clearance Time (s)	6.0	6.0		6.0	6.0			7.0	7.0		7.0	7.0
Vehicle Extension (s)	3.0	1.0		3.0	1.0			2.5	2.5		2.5	2.5
Lane Grp Cap (vph)	104	2185		234	2109			200	178		197	174
v/s Ratio Prot	0.02	c0.34		0.00	c0.52			c0.09			c0.09	
v/s Ratio Perm	0.33			0.03					0.00			0.01
v/c Ratio	0.56	0.54		0.05	0.87			0.83	0.02		0.84	0.07
Uniform Delay, d1	36.9	19.5		23.3	30.4			78.2	71.0		78.5	71.9
Progression Factor	1.00	1.00		1.00	1.00			1.00	1.00		1.00	1.00
Incremental Delay, d2	6.3	1.0		0.1	5.3			24.5	0.0		25.1	0.1
Delay (s)	43.2	20.4		23.4	35.7			102.7	71.0		103.6	72.0
Level of Service	D	C		C	D			F	E		F	E
Approach Delay (s)		21.5			35.6			97.7			90.5	
Approach LOS		C			D			F			F	

Intersection Summary			
HCM 2000 Control Delay	38.4	HCM 2000 Level of Service	D
HCM 2000 Volume to Capacity ratio	0.86		
Actuated Cycle Length (s)	180.0	Sum of lost time (s)	26.0
Intersection Capacity Utilization	78.0%	ICU Level of Service	D
Analysis Period (min)	15		

c Critical Lane Group

Movement	EBT	EBR	WBL	WBT	NBL	NBR
Lane Configurations						
Traffic Volume (veh/h)	914	177	373	1576	180	190
Future Volume (veh/h)	914	177	373	1576	180	190
Number	6	16	5	2	7	14
Initial Q (Qb), veh	0	0	0	0	0	0
Ped-Bike Adj(A_pbT)		1.00	1.00		1.00	1.00
Parking Bus, Adj	1.00	1.00	1.00	1.00	1.00	1.00
Adj Sat Flow, veh/h/ln	1863	1900	1863	1863	1863	1863
Adj Flow Rate, veh/h	1075	208	385	1625	205	216
Adj No. of Lanes	2	0	1	2	1	1
Peak Hour Factor	0.85	0.85	0.97	0.97	0.88	0.88
Percent Heavy Veh, %	2	2	2	2	2	2
Cap, veh/h	2023	390	424	2810	247	364
Arrive On Green	0.68	0.68	0.18	1.00	0.14	0.14
Sat Flow, veh/h	3054	571	1774	3632	1774	1583
Grp Volume(v), veh/h	641	642	385	1625	205	216
Grp Sat Flow(s),veh/h/ln	1770	1762	1774	1770	1774	1583
Q Serve(g_s), s	27.0	27.2	11.0	0.0	16.9	18.2
Cycle Q Clear(g_c), s	27.0	27.2	11.0	0.0	16.9	18.2
Prop In Lane		0.32	1.00		1.00	1.00
Lane Grp Cap(c), veh/h	1209	1204	424	2810	247	364
V/C Ratio(X)	0.53	0.53	0.91	0.58	0.83	0.59
Avail Cap(c_a), veh/h	1209	1204	736	2810	331	439
HCM Platoon Ratio	1.00	1.00	2.00	2.00	1.00	1.00
Upstream Filter(I)	0.85	0.85	0.29	0.29	1.00	1.00
Uniform Delay (d), s/veh	11.8	11.8	15.8	0.0	62.8	51.5
Incr Delay (d2), s/veh	1.4	1.4	1.4	0.3	11.1	1.2
Initial Q Delay(d3),s/veh	0.0	0.0	0.0	0.0	0.0	0.0
%ile BackOfQ(50%),veh/ln	13.5	13.7	10.2	0.1	9.0	16.0
LnGrp Delay(d),s/veh	13.2	13.3	17.3	0.3	73.9	52.7
LnGrp LOS	B	B	B	A	E	D
Approach Vol, veh/h	1283			2010	421	
Approach Delay, s/veh	13.2			3.5	63.0	
Approach LOS	B			A	E	

Timer	1	2	3	4	5	6	7	8
Assigned Phs		2		4	5	6		
Phs Duration (G+Y+Rc), s		124.1		25.9	16.6	107.5		
Change Period (Y+Rc), s		5.0		5.0	3.0	5.0		
Max Green Setting (Gmax), s		112.0		28.0	40.0	69.0		
Max Q Clear Time (g_c+I1), s		2.0		20.2	13.0	29.2		
Green Ext Time (p_c), s		5.2		0.7	0.5	2.8		

Intersection Summary	
HCM 2010 Ctrl Delay	13.6
HCM 2010 LOS	B

Movement	EBL	EBT	EBR	WBL	WBT	WBR	NBL	NBT	NBR	SBL	SBT	SBR
Lane Configurations												
Traffic Volume (veh/h)	39	958	107	103	1531	12	351	8	141	18	13	67
Future Volume (veh/h)	39	958	107	103	1531	12	351	8	141	18	13	67
Number	1	6	16	5	2	12	7	4	14	3	8	18
Initial Q (Qb), veh	0	0	0	0	0	0	0	0	0	0	0	0
Ped-Bike Adj(A_pbT)	1.00		1.00	1.00		1.00	1.00		1.00	1.00		1.00
Parking Bus, Adj	1.00	1.00	1.00	1.00	1.00	1.00	1.00	1.00	1.00	1.00	1.00	1.00
Adj Sat Flow, veh/h/ln	1863	1863	1900	1863	1863	1900	1863	1863	1900	1900	1863	1900
Adj Flow Rate, veh/h	49	1198	134	106	1578	12	439	10	176	25	18	93
Adj No. of Lanes	1	2	0	1	2	0	1	1	0	0	1	0
Peak Hour Factor	0.80	0.80	0.80	0.97	0.97	0.97	0.80	0.80	0.80	0.72	0.72	0.72
Percent Heavy Veh, %	2	2	2	2	2	2	2	2	2	2	2	2
Cap, veh/h	856	2882	322	297	1704	13	499	34	591	115	94	391
Arrive On Green	0.60	1.00	1.00	0.02	0.16	0.16	0.39	0.39	0.39	0.39	0.39	0.39
Sat Flow, veh/h	1774	3211	358	1774	3600	27	1277	86	1510	222	239	999
Grp Volume(v), veh/h	49	659	673	106	775	815	439	0	186	136	0	0
Grp Sat Flow(s),veh/h/ln	1774	1770	1800	1774	1770	1858	1277	0	1596	1461	0	0
Q Serve(g_s), s	0.0	0.0	0.0	5.0	64.8	64.9	44.2	0.0	12.0	0.3	0.0	0.0
Cycle Q Clear(g_c), s	0.0	0.0	0.0	5.0	64.8	64.9	56.6	0.0	12.0	12.4	0.0	0.0
Prop In Lane	1.00		0.20	1.00		0.01	1.00		0.95	0.18		0.68
Lane Grp Cap(c), veh/h	856	1588	1615	297	838	879	499	0	625	600	0	0
V/C Ratio(X)	0.06	0.41	0.42	0.36	0.93	0.93	0.88	0.00	0.30	0.23	0.00	0.00
Avail Cap(c_a), veh/h	856	1588	1615	321	838	879	501	0	628	603	0	0
HCM Platoon Ratio	1.33	1.33	1.33	0.33	0.33	0.33	1.00	1.00	1.00	1.00	1.00	1.00
Upstream Filter(I)	0.76	0.76	0.76	1.00	1.00	1.00	1.00	0.00	1.00	1.00	0.00	0.00
Uniform Delay (d), s/veh	16.1	0.0	0.0	23.4	60.7	60.7	47.5	0.0	31.4	30.3	0.0	0.0
Incr Delay (d2), s/veh	0.0	0.6	0.6	0.3	17.5	17.0	16.1	0.0	0.2	0.1	0.0	0.0
Initial Q Delay(d3),s/veh	0.0	0.0	0.0	0.0	0.0	0.0	0.0	0.0	0.0	0.0	0.0	0.0
%ile BackOfQ(50%),veh/ln	0.8	0.3	0.3	2.5	35.9	37.6	20.2	0.0	5.4	3.8	0.0	0.0
LnGrp Delay(d),s/veh	16.1	0.6	0.6	23.7	78.2	77.7	63.6	0.0	31.6	30.4	0.0	0.0
LnGrp LOS	B	A	A	C	E	E	E		C	C		
Approach Vol, veh/h		1381			1696			625			136	
Approach Delay, s/veh		1.2			74.6			54.1			30.4	
Approach LOS		A			E			D			C	

Timer	1	2	3	4	5	6	7	8
Assigned Phs	1	2		4	5	6		8
Phs Duration (G+Y+Rc), s	15.7	77.0		64.7	10.0	142.7		64.7
Change Period (Y+Rc), s	6.0	* 6		6.0	3.0	6.0		6.0
Max Green Setting (Gmax), s	5.0	* 71		59.0	9.0	67.0		59.0
Max Q Clear Time (g_c+I1), s	12.0	66.9		58.6	7.0	2.0		14.4
Green Ext Time (p_c), s	0.0	1.8		0.1	0.0	2.9		0.7

Intersection Summary	
HCM 2010 Ctrl Delay	43.3
HCM 2010 LOS	D

Notes

* HCM 2010 computational engine requires equal clearance times for the phases crossing the barrier.

Movement	EBL	EBT	EBR	WBL	WBT	WBR	NBL	NBT	NBR	SBL	SBT	SBR
Lane Configurations												
Traffic Volume (veh/h)	3	1012	102	174	1387	11	258	4	374	5	1	1
Future Volume (veh/h)	3	1012	102	174	1387	11	258	4	374	5	1	1
Number	1	6	16	5	2	12	7	4	14	3	8	18
Initial Q (Qb), veh	0	0	0	0	0	0	0	0	0	0	0	0
Ped-Bike Adj(A_pbT)	1.00		1.00	1.00		1.00	1.00		1.00	1.00		1.00
Parking Bus, Adj	1.00	1.00	1.00	1.00	1.00	1.00	1.00	1.00	1.00	1.00	1.00	1.00
Adj Sat Flow, veh/h/ln	1863	1863	1900	1863	1863	1900	1863	1863	1863	1900	1863	1900
Adj Flow Rate, veh/h	3	1124	113	176	1401	11	287	4	416	9	2	2
Adj No. of Lanes	1	2	0	1	2	0	1	1	1	0	1	0
Peak Hour Factor	0.90	0.90	0.90	0.99	0.99	0.99	0.90	0.90	0.90	0.55	0.55	0.55
Percent Heavy Veh, %	2	2	2	2	2	2	2	2	2	2	2	2
Cap, veh/h	222	1496	150	358	2226	17	493	588	500	279	62	55
Arrive On Green	0.61	0.61	0.61	0.25	1.00	1.00	0.32	0.32	0.32	0.32	0.32	0.32
Sat Flow, veh/h	379	3249	326	1774	3599	28	1407	1863	1583	756	196	173
Grp Volume(v), veh/h	3	612	625	176	689	723	287	4	416	13	0	0
Grp Sat Flow(s),veh/h/ln	379	1770	1805	1774	1770	1858	1407	1863	1583	1126	0	0
Q Serve(g_s), s	0.5	37.7	37.8	0.0	0.0	0.0	25.7	0.2	37.1	0.0	0.0	0.0
Cycle Q Clear(g_c), s	0.5	37.7	37.8	0.0	0.0	0.0	26.4	0.2	37.1	0.8	0.0	0.0
Prop In Lane	1.00		0.18	1.00		0.02	1.00		1.00	0.69		0.15
Lane Grp Cap(c), veh/h	222	815	831	358	1094	1149	493	588	500	396	0	0
V/C Ratio(X)	0.01	0.75	0.75	0.49	0.63	0.63	0.58	0.01	0.83	0.03	0.00	0.00
Avail Cap(c_a), veh/h	222	815	831	358	1094	1149	493	588	500	396	0	0
HCM Platoon Ratio	1.33	1.33	1.33	2.00	2.00	2.00	1.00	1.00	1.00	1.00	1.00	1.00
Upstream Filter(I)	1.00	1.00	1.00	1.00	1.00	1.00	1.00	1.00	1.00	1.00	0.00	0.00
Uniform Delay (d), s/veh	16.0	23.2	23.2	42.3	0.0	0.0	44.5	35.7	48.3	35.8	0.0	0.0
Incr Delay (d2), s/veh	0.1	6.3	6.2	4.8	2.7	2.6	4.9	0.0	14.9	0.2	0.0	0.0
Initial Q Delay(d3),s/veh	0.0	0.0	0.0	0.0	0.0	0.0	0.0	0.0	0.0	0.0	0.0	0.0
%ile BackOfQ(50%),veh/ln	0.1	19.6	20.0	6.0	0.8	0.8	11.0	0.1	18.2	0.4	0.0	0.0
LnGrp Delay(d),s/veh	16.1	29.5	29.4	47.0	2.7	2.6	49.5	35.7	63.2	36.0	0.0	0.0
LnGrp LOS	B	C	C	D	A	A	D	D	E	D		
Approach Vol, veh/h		1240			1588			707			13	
Approach Delay, s/veh		29.4			7.6			57.4			36.0	
Approach LOS		C			A			E			D	

Timer	1	2	3	4	5	6	7	8
Assigned Phs		2		4	5	6		8
Phs Duration (G+Y+Rc), s		99.0		53.0	24.0	75.0		53.0
Change Period (Y+Rc), s		5.0		5.0	5.0	* 5		5.0
Max Green Setting (Gmax), s		92.0		48.0	19.0	* 70		48.0
Max Q Clear Time (g_c+I1), s		2.0		39.1	2.0	39.8		2.8
Green Ext Time (p_c), s		3.1		1.8	0.2	2.6		0.1

Intersection Summary	
HCM 2010 Ctrl Delay	25.3
HCM 2010 LOS	C

Notes

* HCM 2010 computational engine requires equal clearance times for the phases crossing the barrier.

Movement	EBL	EBT	EBR	WBL	WBT	WBR	NBL	NBT	NBR	SBL	SBT	SBR
Lane Configurations												
Traffic Volume (veh/h)	17	1374	0	21	1508	69	5	1	119	197	1	59
Future Volume (veh/h)	17	1374	0	21	1508	69	5	1	119	197	1	59
Number	1	6	16	5	2	12	7	4	14	3	8	18
Initial Q (Qb), veh	0	0	0	0	0	0	0	0	0	0	0	0
Ped-Bike Adj(A_pbT)	1.00		1.00	1.00		1.00	1.00		1.00	1.00		1.00
Parking Bus, Adj	1.00	1.00	1.00	1.00	1.00	1.00	1.00	1.00	1.00	1.00	1.00	1.00
Adj Sat Flow, veh/h/ln	1863	1863	1900	1863	1863	1900	1900	1863	1900	1863	1863	1900
Adj Flow Rate, veh/h	19	1510	0	22	1587	73	6	1	142	216	1	65
Adj No. of Lanes	1	2	0	1	2	0	0	1	0	1	1	0
Peak Hour Factor	0.91	0.91	0.91	0.95	0.95	0.95	0.84	0.84	0.84	0.91	0.91	0.91
Percent Heavy Veh, %	2	2	2	2	2	2	2	2	2	2	2	2
Cap, veh/h	163	2072	0	285	1973	90	31	15	448	371	7	463
Arrive On Green	0.07	1.00	0.00	0.03	0.57	0.57	0.30	0.30	0.30	0.30	0.30	0.30
Sat Flow, veh/h	1774	3632	0	1774	3447	158	23	52	1512	1240	24	1563
Grp Volume(v), veh/h	19	1510	0	22	812	848	149	0	0	216	0	66
Grp Sat Flow(s),veh/h/ln	1774	1770	0	1774	1770	1835	1587	0	0	1240	0	1587
Q Serve(g_s), s	0.0	0.0	0.0	0.8	55.1	55.9	0.0	0.0	0.0	18.1	0.0	4.6
Cycle Q Clear(g_c), s	0.0	0.0	0.0	0.8	55.1	55.9	11.0	0.0	0.0	29.1	0.0	4.6
Prop In Lane	1.00		0.00	1.00		0.09	0.04		0.95	1.00		0.98
Lane Grp Cap(c), veh/h	163	2072	0	285	1013	1050	494	0	0	371	0	470
V/C Ratio(X)	0.12	0.73	0.00	0.08	0.80	0.81	0.30	0.00	0.00	0.58	0.00	0.14
Avail Cap(c_a), veh/h	163	2072	0	285	1013	1050	494	0	0	371	0	470
HCM Platoon Ratio	2.00	2.00	2.00	1.00	1.00	1.00	1.00	1.00	1.00	1.00	1.00	1.00
Upstream Filter(I)	1.00	1.00	0.00	1.00	1.00	1.00	1.00	0.00	0.00	1.00	0.00	1.00
Uniform Delay (d), s/veh	47.0	0.0	0.0	14.5	25.7	25.8	41.5	0.0	0.0	49.7	0.0	39.3
Incr Delay (d2), s/veh	1.5	2.3	0.0	0.5	6.7	6.7	1.6	0.0	0.0	6.6	0.0	0.6
Initial Q Delay(d3),s/veh	0.0	0.0	0.0	0.0	0.0	0.0	0.0	0.0	0.0	0.0	0.0	0.0
%ile BackOfQ(50%),veh/ln	0.7	0.7	0.0	0.4	28.7	30.2	5.1	0.0	0.0	8.8	0.0	2.1
LnGrp Delay(d),s/veh	48.5	2.3	0.0	15.1	32.4	32.5	43.1	0.0	0.0	56.3	0.0	39.9
LnGrp LOS	D	A		B	C	C	D			E		D
Approach Vol, veh/h		1529			1682			149			282	
Approach Delay, s/veh		2.9			32.2			43.1			52.5	
Approach LOS		A			C			D			D	

Timer	1	2	3	4	5	6	7	8
Assigned Phs	1	2		4	5	6		8
Phs Duration (G+Y+Rc), s	10.0	92.0		50.0	8.0	94.0		50.0
Change Period (Y+Rc), s	5.0	* 5		5.0	3.0	5.0		5.0
Max Green Setting (Gmax), s	5.0	* 87		45.0	5.0	87.0		45.0
Max Q Clear Time (g_c+I1), s	2.0	57.9		13.0	2.8	2.0		31.1
Green Ext Time (p_c), s	0.0	4.0		0.8	0.0	4.6		0.7

Intersection Summary	
HCM 2010 Ctrl Delay	21.9
HCM 2010 LOS	C

Notes

* HCM 2010 computational engine requires equal clearance times for the phases crossing the barrier.

Movement	EBL	EBT	EBR	WBL	WBT	WBR	NBL	NBT	NBR	SBL	SBT	SBR
Lane Configurations												
Traffic Volume (veh/h)	318	1232	153	238	970	135	239	835	311	267	866	322
Future Volume (veh/h)	318	1232	153	238	970	135	239	835	311	267	866	322
Number	3	8	18	7	4	14	1	6	16	5	2	12
Initial Q (Qb), veh	0	0	0	0	0	0	0	0	0	0	0	0
Ped-Bike Adj(A_pbT)	1.00		1.00	1.00		1.00	1.00		1.00	1.00		1.00
Parking Bus, Adj	1.00	1.00	1.00	1.00	1.00	1.00	1.00	1.00	1.00	1.00	1.00	1.00
Adj Sat Flow, veh/h/ln	1863	1863	1900	1863	1863	1900	1863	1863	1900	1863	1863	1900
Adj Flow Rate, veh/h	357	1384	172	253	1032	144	260	908	338	293	952	354
Adj No. of Lanes	2	3	0	2	3	0	2	3	0	2	3	0
Peak Hour Factor	0.89	0.89	0.89	0.94	0.94	0.94	0.92	0.92	0.92	0.91	0.91	0.91
Percent Heavy Veh, %	2	2	2	2	2	2	2	2	2	2	2	2
Cap, veh/h	400	1539	191	292	1424	198	427	1158	430	484	1219	453
Arrive On Green	0.12	0.34	0.34	0.08	0.32	0.32	0.12	0.32	0.32	0.14	0.33	0.33
Sat Flow, veh/h	3442	4583	569	3442	4513	629	3442	3656	1357	3442	3656	1358
Grp Volume(v), veh/h	357	1024	532	253	775	401	260	842	404	293	883	423
Grp Sat Flow(s),veh/h/ln	1721	1695	1762	1721	1695	1752	1721	1695	1623	1721	1695	1623
Q Serve(g_s), s	18.4	51.7	51.7	13.1	36.5	36.6	12.9	40.6	40.8	14.4	42.2	42.3
Cycle Q Clear(g_c), s	18.4	51.7	51.7	13.1	36.5	36.6	12.9	40.6	40.8	14.4	42.2	42.3
Prop In Lane	1.00		0.32	1.00		0.36	1.00		0.84	1.00		0.84
Lane Grp Cap(c), veh/h	400	1138	592	292	1070	553	427	1074	514	484	1130	541
V/C Ratio(X)	0.89	0.90	0.90	0.87	0.72	0.73	0.61	0.78	0.79	0.61	0.78	0.78
Avail Cap(c_a), veh/h	497	1205	627	344	1070	553	427	1074	514	484	1130	541
HCM Platoon Ratio	1.00	1.00	1.00	1.00	1.00	1.00	1.00	1.00	1.00	1.00	1.00	1.00
Upstream Filter(I)	1.00	1.00	1.00	1.00	1.00	1.00	1.00	1.00	1.00	1.00	1.00	1.00
Uniform Delay (d), s/veh	78.4	56.9	56.9	81.4	54.7	54.7	74.7	55.9	56.0	72.7	54.1	54.1
Incr Delay (d2), s/veh	15.1	9.0	15.5	17.3	2.5	4.7	1.8	5.8	11.5	1.6	5.4	10.8
Initial Q Delay(d3),s/veh	0.0	0.0	0.0	0.0	0.0	0.0	0.0	0.0	0.0	0.0	0.0	0.0
%ile BackOfQ(50%),veh/ln	9.6	25.6	27.7	6.9	17.5	18.4	6.2	19.9	19.9	7.0	20.6	20.5
LnGrp Delay(d),s/veh	93.6	65.9	72.4	98.7	57.1	59.4	76.5	61.7	67.5	74.2	59.5	64.9
LnGrp LOS	F	E	E	F	E	E	E	E	E	E	E	E
Approach Vol, veh/h		1913			1429			1506			1599	
Approach Delay, s/veh		72.9			65.1			65.8			63.6	
Approach LOS		E			E			E			E	

Timer	1	2	3	4	5	6	7	8
Assigned Phs	1	2	3	4	5	6	7	8
Phs Duration (G+Y+Rc), s	26.3	66.0	24.9	62.8	29.3	63.0	21.3	66.4
Change Period (Y+Rc), s	4.0	6.0	4.0	6.0	4.0	6.0	6.0	* 6
Max Green Setting (Gmax), s	18.3	60.0	26.0	56.0	21.0	57.0	18.0	* 64
Max Q Clear Time (g_c+I1), s	14.9	44.3	20.4	38.6	16.4	42.8	15.1	53.7
Green Ext Time (p_c), s	0.2	3.1	0.5	7.1	0.2	2.8	0.2	6.7

Intersection Summary	
HCM 2010 Ctrl Delay	67.2
HCM 2010 LOS	E

Notes

* HCM 2010 computational engine requires equal clearance times for the phases crossing the barrier.

Movement	EBL	EBT	EBR	WBL	WBT	WBR	NBL	NBT	NBR	SBL	SBT	SBR
Lane Configurations												
Traffic Volume (veh/h)	107	1658	32	0	941	147	100	44	5	278	95	291
Future Volume (veh/h)	107	1658	32	0	941	147	100	44	5	278	95	291
Number	1	6	16	5	2	12	7	4	14	3	8	18
Initial Q (Qb), veh	0	0	0	0	0	0	0	0	0	0	0	0
Ped-Bike Adj(A_pbT)	1.00		1.00	1.00		1.00	1.00		1.00	1.00		1.00
Parking Bus, Adj	1.00	1.00	1.00	1.00	1.00	1.00	1.00	1.00	1.00	1.00	1.00	1.00
Adj Sat Flow, veh/h/ln	1863	1863	1900	0	1863	1900	1863	1863	1863	1863	1863	1863
Adj Flow Rate, veh/h	119	1842	36	0	1023	160	125	55	6	302	103	316
Adj No. of Lanes	1	2	0	0	2	0	1	1	1	1	1	1
Peak Hour Factor	0.90	0.90	0.90	0.92	0.92	0.92	0.80	0.80	0.80	0.92	0.92	0.92
Percent Heavy Veh, %	2	2	2	0	2	2	2	2	2	2	2	2
Cap, veh/h	286	2328	45	0	1790	280	165	197	167	366	373	378
Arrive On Green	0.04	0.66	0.66	0.00	0.58	0.58	0.04	0.11	0.11	0.13	0.20	0.20
Sat Flow, veh/h	1774	3551	69	0	3162	479	1774	1863	1583	1774	1863	1583
Grp Volume(v), veh/h	119	915	963	0	589	594	125	55	6	302	103	316
Grp Sat Flow(s),veh/h/ln	1774	1770	1851	0	1770	1778	1774	1863	1583	1774	1863	1583
Q Serve(g_s), s	4.7	66.4	67.2	0.0	37.4	37.6	2.6	4.9	0.6	16.1	8.4	27.7
Cycle Q Clear(g_c), s	4.7	66.4	67.2	0.0	37.4	37.6	2.6	4.9	0.6	16.1	8.4	27.7
Prop In Lane	1.00		0.04	0.00		0.27	1.00		1.00	1.00		1.00
Lane Grp Cap(c), veh/h	286	1160	1213	0	1033	1038	165	197	167	366	373	378
V/C Ratio(X)	0.42	0.79	0.79	0.00	0.57	0.57	0.76	0.28	0.04	0.82	0.28	0.84
Avail Cap(c_a), veh/h	453	1160	1213	0	1033	1038	215	197	167	416	373	378
HCM Platoon Ratio	1.00	1.00	1.00	1.00	1.00	1.00	1.00	1.00	1.00	1.00	1.00	1.00
Upstream Filter(I)	1.00	1.00	1.00	0.00	1.00	1.00	1.00	1.00	1.00	1.00	1.00	1.00
Uniform Delay (d), s/veh	18.8	22.1	22.2	0.0	23.4	23.4	81.0	74.2	72.3	69.3	61.0	43.4
Incr Delay (d2), s/veh	0.4	5.5	5.4	0.0	2.3	2.3	7.3	3.5	0.4	10.2	1.8	19.2
Initial Q Delay(d3),s/veh	0.0	0.0	0.0	0.0	0.0	0.0	0.0	0.0	0.0	0.0	0.0	0.0
%ile BackOfQ(50%),veh/ln	2.3	34.1	36.0	0.0	18.8	19.1	6.4	2.7	0.3	15.5	4.5	14.1
LnGrp Delay(d),s/veh	19.1	27.6	27.6	0.0	25.7	25.7	88.3	77.7	72.7	79.5	62.8	62.6
LnGrp LOS	B	C	C		C	C	F	E	E	E	E	E
Approach Vol, veh/h		1997			1183			186			721	
Approach Delay, s/veh		27.1			25.7			84.6			69.7	
Approach LOS		C			C			F			E	

Timer	1	2	3	4	5	6	7	8
Assigned Phs	1	2	3	4		6	7	8
Phs Duration (G+Y+Rc), s	13.0	111.0	30.0	26.0		124.0	13.0	43.0
Change Period (Y+Rc), s	6.0	6.0	6.0	7.0		6.0	6.0	7.0
Max Green Setting (Gmax), s	24.0	83.0	29.0	19.0		113.0	12.0	36.0
Max Q Clear Time (g_c+I1), s	6.7	39.6	18.1	6.9		69.2	4.6	29.7
Green Ext Time (p_c), s	0.1	2.5	0.4	0.1		5.1	0.1	0.7

Intersection Summary	
HCM 2010 Ctrl Delay	36.8
HCM 2010 LOS	D

Intersection	
Int Delay, s/veh	4.9

Movement	EBL	EBT	EBR	WBL	WBT	WBR	NBL	NBT	NBR	SBL	SBT	SBR
Lane Configurations												
Traffic Vol, veh/h	22	1492	427	153	1055	20	0	0	160	0	0	33
Future Vol, veh/h	22	1492	427	153	1055	20	0	0	160	0	0	33
Conflicting Peds, #/hr	0	0	0	0	0	0	0	0	0	0	0	0
Sign Control	Free	Free	Free	Free	Free	Free	Stop	Stop	Stop	Stop	Stop	Stop
RT Channelized	-	-	None	-	-	None	-	-	None	-	-	None
Storage Length	-	-	-	300	-	-	-	-	0	-	-	0
Veh in Median Storage, #	-	0	-	-	0	-	-	0	-	-	0	-
Grade, %	-	0	-	-	0	-	-	0	-	-	0	-
Peak Hour Factor	92	92	92	92	92	92	92	92	92	92	92	92
Heavy Vehicles, %	2	2	2	2	2	2	2	2	2	2	2	2
Mvmt Flow	24	1622	464	166	1147	22	0	0	174	0	0	36

Major/Minor	Major1			Major2			Minor1			Minor2		
Conflicting Flow All	1169	0	0	2086	0	0	-	-	1043	-	-	585
Stage 1	-	-	-	-	-	-	-	-	-	-	-	-
Stage 2	-	-	-	-	-	-	-	-	-	-	-	-
Critical Hdwy	4.14	-	-	4.14	-	-	-	-	6.94	-	-	6.94
Critical Hdwy Stg 1	-	-	-	-	-	-	-	-	-	-	-	-
Critical Hdwy Stg 2	-	-	-	-	-	-	-	-	-	-	-	-
Follow-up Hdwy	2.22	-	-	2.22	-	-	-	-	3.32	-	-	3.32
Pot Cap-1 Maneuver	593	-	-	262	-	-	0	0	226	0	0	454
Stage 1	-	-	-	-	-	-	0	0	-	0	0	-
Stage 2	-	-	-	-	-	-	0	0	-	0	0	-
Platoon blocked, %		-	-		-	-						
Mov Cap-1 Maneuver	593	-	-	262	-	-	-	-	226	-	-	454
Mov Cap-2 Maneuver	-	-	-	-	-	-	-	-	-	-	-	-
Stage 1	-	-	-	-	-	-	-	-	-	-	-	-
Stage 2	-	-	-	-	-	-	-	-	-	-	-	-

Approach	EB	WB	NB	SB
HCM Control Delay, s	0.1	5	59.7	13.6
HCM LOS			F	B

Minor Lane/Major Mvmt	NBLn1	EBL	EBT	EBR	WBL	WBT	WBR	SBLn1
Capacity (veh/h)	226	593	-	-	262	-	-	454
HCM Lane V/C Ratio	0.77	0.04	-	-	0.635	-	-	0.079
HCM Control Delay (s)	59.7	11.3	-	-	39.9	-	-	13.6
HCM Lane LOS	F	B	-	-	E	-	-	B
HCM 95th %tile Q(veh)	5.5	0.1	-	-	3.9	-	-	0.3

Intersection	
Int Delay, s/veh	2.7

Movement	EBT	EBR	WBL	WBT	NBL	NBR
Lane Configurations						
Traffic Vol, veh/h	1608	44	24	1210	18	17
Future Vol, veh/h	1608	44	24	1210	18	17
Conflicting Peds, #/hr	0	0	0	0	0	0
Sign Control	Free	Free	Free	Free	Stop	Stop
RT Channelized	-	None	-	None	-	None
Storage Length	-	-	200	-	0	0
Veh in Median Storage, #	0	-	-	0	0	-
Grade, %	0	-	-	0	0	-
Peak Hour Factor	92	92	92	92	92	92
Heavy Vehicles, %	2	2	2	2	2	2
Mvmt Flow	1748	48	26	1315	20	18

Major/Minor	Major1		Major2		Minor1	
Conflicting Flow All	0	0	1796	0	2482	898
Stage 1	-	-	-	-	1772	-
Stage 2	-	-	-	-	710	-
Critical Hdwy	-	-	4.14	-	6.84	6.94
Critical Hdwy Stg 1	-	-	-	-	5.84	-
Critical Hdwy Stg 2	-	-	-	-	5.84	-
Follow-up Hdwy	-	-	2.22	-	3.52	3.32
Pot Cap-1 Maneuver	-	-	340	-	24	282
Stage 1	-	-	-	-	121	-
Stage 2	-	-	-	-	448	-
Platoon blocked, %	-	-		-		
Mov Cap-1 Maneuver	-	-	340	-	22	282
Mov Cap-2 Maneuver	-	-	-	-	22	-
Stage 1	-	-	-	-	121	-
Stage 2	-	-	-	-	414	-

Approach	EB	WB	NB
HCM Control Delay, s	0	0.3	215.2
HCM LOS			F

Minor Lane/Major Mvmt	NBLn1	NBLn2	EBT	EBR	WBL	WBT
Capacity (veh/h)	22	282	-	-	340	-
HCM Lane V/C Ratio	0.889	0.066	-	-	0.077	-
HCM Control Delay (s)	$ 400.8	18.7	-	-	16.5	-
HCM Lane LOS	F	C	-	-	C	-
HCM 95th %tile Q(veh)	2.6	0.2	-	-	0.2	-

Movement	EBL	EBT	EBR	WBL	WBT	WBR	NBL	NBT	NBR	SBL	SBT	SBR
Lane Configurations												
Traffic Volume (veh/h)	389	1016	220	208	743	218	283	1285	165	389	1712	208
Future Volume (veh/h)	389	1016	220	208	743	218	283	1285	165	389	1712	208
Number	3	8	18	7	4	14	1	6	16	5	2	12
Initial Q (Qb), veh	0	0	0	0	0	0	0	0	0	0	0	0
Ped-Bike Adj(A_pbT)	1.00		1.00	1.00		1.00	1.00		1.00	1.00		1.00
Parking Bus, Adj	1.00	1.00	1.00	1.00	1.00	1.00	1.00	1.00	1.00	1.00	1.00	1.00
Adj Sat Flow, veh/h/ln	1863	1863	1863	1863	1863	1863	1863	1863	1900	1863	1863	1900
Adj Flow Rate, veh/h	418	1092	237	242	864	253	349	1586	204	401	1765	214
Adj No. of Lanes	2	3	1	2	3	1	2	3	0	2	3	0
Peak Hour Factor	0.93	0.93	0.93	0.86	0.86	0.86	0.81	0.81	0.81	0.97	0.97	0.97
Percent Heavy Veh, %	2	2	2	2	2	2	2	2	2	2	2	2
Cap, veh/h	459	1229	581	281	936	495	430	1893	243	442	1896	229
Arrive On Green	0.13	0.24	0.24	0.08	0.18	0.18	0.12	0.41	0.41	0.13	0.41	0.41
Sat Flow, veh/h	3442	5085	1583	3442	5085	1583	3442	4564	586	3442	4600	555
Grp Volume(v), veh/h	418	1092	237	242	864	253	349	1177	613	401	1299	680
Grp Sat Flow(s),veh/h/ln	1721	1695	1583	1721	1695	1583	1721	1695	1759	1721	1695	1765
Q Serve(g_s), s	19.8	34.2	3.3	11.5	27.6	14.2	16.3	51.4	51.6	19.0	60.2	60.9
Cycle Q Clear(g_c), s	19.8	34.2	3.3	11.5	27.6	14.2	16.3	51.4	51.6	19.0	60.2	60.9
Prop In Lane	1.00		1.00	1.00		1.00	1.00		0.33	1.00		0.31
Lane Grp Cap(c), veh/h	459	1229	581	281	936	495	430	1406	730	442	1397	727
V/C Ratio(X)	0.91	0.89	0.41	0.86	0.92	0.51	0.81	0.84	0.84	0.91	0.93	0.94
Avail Cap(c_a), veh/h	501	1264	591	292	955	501	430	1406	730	480	1397	727
HCM Platoon Ratio	1.00	1.00	1.00	1.00	1.00	1.00	1.00	1.00	1.00	1.00	1.00	1.00
Upstream Filter(I)	1.00	1.00	1.00	1.00	1.00	1.00	1.00	1.00	1.00	1.00	1.00	1.00
Uniform Delay (d), s/veh	70.5	60.4	20.7	74.8	66.2	22.8	70.3	43.3	43.3	71.0	46.2	46.4
Incr Delay (d2), s/veh	19.0	7.8	0.3	20.4	13.8	0.6	10.5	6.1	11.2	19.2	12.2	20.9
Initial Q Delay(d3),s/veh	0.0	0.0	0.0	0.0	0.0	0.0	0.0	0.0	0.0	0.0	0.0	0.0
%ile BackOfQ(50%),veh/ln	10.6	17.0	5.7	6.2	14.2	6.2	8.4	25.2	27.3	10.2	30.5	33.9
LnGrp Delay(d),s/veh	89.5	68.2	21.1	95.2	79.9	23.5	80.8	49.4	54.5	90.1	58.5	67.3
LnGrp LOS	F	E	C	F	E	C	F	D	D	F	E	E
Approach Vol, veh/h		1747			1359			2139			2380	
Approach Delay, s/veh		66.9			72.1			56.0			66.3	
Approach LOS		E			E			E			E	

Timer	1	2	3	4	5	6	7	8
Assigned Phs	1	2	3	4	5	6	7	8
Phs Duration (G+Y+Rc), s	26.6	74.0	28.0	36.4	26.2	74.4	18.5	45.9
Change Period (Y+Rc), s	6.0	* 6	6.0	* 6	5.0	6.0	5.0	6.0
Max Green Setting (Gmax), s	20.0	* 68	24.0	* 31	23.0	65.0	14.0	41.0
Max Q Clear Time (g_c+I1), s	18.3	62.9	21.8	29.6	21.0	53.6	13.5	36.2
Green Ext Time (p_c), s	0.1	3.0	0.2	0.8	0.2	4.5	0.0	2.8

Intersection Summary	
HCM 2010 Ctrl Delay	64.6
HCM 2010 LOS	E

Notes

* HCM 2010 computational engine requires equal clearance times for the phases crossing the barrier.

Movement	EBL	EBT	EBR	WBL	WBT	WBR	NBL	NBT	NBR	SBL	SBT	SBR
Lane Configurations												
Traffic Volume (veh/h)	907	1469	569	211	750	130	408	322	169	178	220	262
Future Volume (veh/h)	907	1469	569	211	750	130	408	322	169	178	220	262
Number	1	6	16	5	2	12	7	4	14	3	8	18
Initial Q (Qb), veh	0	0	0	0	0	0	0	0	0	0	0	0
Ped-Bike Adj(A_pbT)	1.00		1.00	1.00		1.00	1.00		1.00	1.00		1.00
Parking Bus, Adj	1.00	1.00	1.00	1.00	1.00	1.00	1.00	1.00	1.00	1.00	1.00	1.00
Adj Sat Flow, veh/h/ln	1863	1863	1863	1863	1863	1900	1863	1863	1900	1863	1863	1900
Adj Flow Rate, veh/h	975	1580	612	232	824	143	443	350	184	185	229	273
Adj No. of Lanes	2	2	1	1	3	0	1	2	0	1	2	0
Peak Hour Factor	0.93	0.93	0.93	0.91	0.91	0.91	0.92	0.92	0.92	0.96	0.96	0.96
Percent Heavy Veh, %	2	2	2	2	2	2	2	2	2	2	2	2
Cap, veh/h	956	1455	941	188	946	163	371	703	363	283	315	281
Arrive On Green	0.28	0.41	0.41	0.08	0.22	0.22	0.18	0.31	0.31	0.05	0.18	0.18
Sat Flow, veh/h	3442	3539	1583	1774	4367	753	1774	2260	1167	1774	1770	1583
Grp Volume(v), veh/h	975	1580	612	232	639	328	443	273	261	185	229	273
Grp Sat Flow(s),veh/h/ln	1721	1770	1583	1774	1695	1730	1774	1770	1657	1774	1770	1583
Q Serve(g_s), s	50.0	74.0	24.6	15.0	32.7	33.0	33.0	22.6	23.2	9.0	22.0	30.8
Cycle Q Clear(g_c), s	50.0	74.0	24.6	15.0	32.7	33.0	33.0	22.6	23.2	9.0	22.0	30.8
Prop In Lane	1.00		1.00	1.00		0.44	1.00		0.70	1.00		1.00
Lane Grp Cap(c), veh/h	956	1455	941	188	735	375	371	551	515	283	315	281
V/C Ratio(X)	1.02	1.09	0.65	1.24	0.87	0.88	1.19	0.50	0.51	0.65	0.73	0.97
Avail Cap(c_a), veh/h	956	1455	941	188	735	375	371	551	515	283	315	281
HCM Platoon Ratio	1.00	1.00	1.00	1.00	1.00	1.00	1.00	1.00	1.00	1.00	1.00	1.00
Upstream Filter(I)	1.00	1.00	1.00	1.00	1.00	1.00	1.00	1.00	1.00	1.00	1.00	1.00
Uniform Delay (d), s/veh	65.0	53.0	8.9	80.9	68.0	68.2	57.5	50.5	50.7	61.6	69.9	73.5
Incr Delay (d2), s/veh	34.2	50.6	3.5	143.0	13.3	23.8	110.8	0.5	0.6	4.3	7.8	45.1
Initial Q Delay(d3),s/veh	0.0	0.0	0.0	0.0	0.0	0.0	0.0	0.0	0.0	0.0	0.0	0.0
%ile BackOfQ(50%),veh/ln	28.3	46.4	11.4	16.8	16.7	18.3	29.9	11.1	10.8	4.3	11.4	17.0
LnGrp Delay(d),s/veh	99.2	103.6	12.4	223.9	81.3	92.0	168.3	51.0	51.3	65.8	77.7	118.7
LnGrp LOS	F	F	B	F	F	F	F	D	D	E	E	F
Approach Vol, veh/h		3167			1199			977			687	
Approach Delay, s/veh		84.6			111.9			104.3			90.8	
Approach LOS		F			F			F			F	

Timer	1	2	3	4	5	6	7	8
Assigned Phs	1	2	3	4	5	6	7	8
Phs Duration (G+Y+Rc), s	56.0	45.0	16.0	63.0	21.0	80.0	40.0	39.0
Change Period (Y+Rc), s	6.0	6.0	7.0	7.0	6.0	6.0	7.0	7.0
Max Green Setting (Gmax), s	50.0	39.0	9.0	56.0	15.0	74.0	33.0	32.0
Max Q Clear Time (g_c+I1), s	52.0	35.0	11.0	25.2	17.0	76.0	35.0	32.8
Green Ext Time (p_c), s	0.0	1.1	0.0	2.9	0.0	0.0	0.0	0.0

Intersection Summary	
HCM 2010 Ctrl Delay	93.9
HCM 2010 LOS	F

Intersection	
Int Delay, s/veh	0.3

Movement	EBL	EBT	WBT	WBR	SBL	SBR
Lane Configurations						
Traffic Vol, veh/h	0	1816	1041	47	0	50
Future Vol, veh/h	0	1816	1041	47	0	50
Conflicting Peds, #/hr	0	0	0	0	0	0
Sign Control	Free	Free	Free	Free	Stop	Stop
RT Channelized	-	None	-	None	-	None
Storage Length	-	-	-	50	-	0
Veh in Median Storage, #	-	0	0	-	0	-
Grade, %	-	0	0	-	0	-
Peak Hour Factor	92	92	92	92	92	92
Heavy Vehicles, %	2	2	2	2	2	2
Mvmt Flow	0	1974	1132	51	0	54

Major/Minor	Major1		Major2		Minor2	
Conflicting Flow All	-	0	-	0	-	592
Stage 1	-	-	-	-	-	-
Stage 2	-	-	-	-	-	-
Critical Hdwy	-	-	-	-	-	7.14
Critical Hdwy Stg 1	-	-	-	-	-	-
Critical Hdwy Stg 2	-	-	-	-	-	-
Follow-up Hdwy	-	-	-	-	-	3.92
Pot Cap-1 Maneuver	0	-	-	-	0	385
Stage 1	0	-	-	-	0	-
Stage 2	0	-	-	-	0	-
Platoon blocked, %		-	-	-		
Mov Cap-1 Maneuver	-	-	-	-	-	385
Mov Cap-2 Maneuver	-	-	-	-	-	-
Stage 1	-	-	-	-	-	-
Stage 2	-	-	-	-	-	-

Approach	EB	WB	SB
HCM Control Delay, s	0	0	15.9
HCM LOS			C

Minor Lane/Major Mvmt	EBT	WBT	WBR	SBLn1
Capacity (veh/h)	-	-	-	385
HCM Lane V/C Ratio	-	-	-	0.141
HCM Control Delay (s)	-	-	-	15.9
HCM Lane LOS	-	-	-	C
HCM 95th %tile Q(veh)	-	-	-	0.5

Intersection	
Int Delay, s/veh	5

Movement	EBT	EBR	WBL	WBT	NBL	NBR
Lane Configurations						
Traffic Vol, veh/h	1816	0	0	1062	26	21
Future Vol, veh/h	1816	0	0	1062	26	21
Conflicting Peds, #/hr	0	0	0	0	0	0
Sign Control	Free	Free	Free	Free	Stop	Stop
RT Channelized	-	None	-	None	-	None
Storage Length	-	-	-	-	0	50
Veh in Median Storage, #	0	-	-	0	0	-
Grade, %	0	-	-	0	0	-
Peak Hour Factor	92	92	92	92	92	92
Heavy Vehicles, %	2	2	2	2	2	2
Mvmt Flow	1974	0	0	1154	28	23

Major/Minor	Major1		Major2		Minor1	
Conflicting Flow All	0	-	-	-	2551	987
Stage 1	-	-	-	-	1974	-
Stage 2	-	-	-	-	577	-
Critical Hdwy	-	-	-	-	6.84	6.94
Critical Hdwy Stg 1	-	-	-	-	5.84	-
Critical Hdwy Stg 2	-	-	-	-	5.84	-
Follow-up Hdwy	-	-	-	-	3.52	3.32
Pot Cap-1 Maneuver	-	0	0	-	~ 22	246
Stage 1	-	0	0	-	94	-
Stage 2	-	0	0	-	525	-
Platoon blocked, %	-			-		
Mov Cap-1 Maneuver	-	-	-	-	~ 22	246
Mov Cap-2 Maneuver	-	-	-	-	~ 22	-
Stage 1	-	-	-	-	94	-
Stage 2	-	-	-	-	525	-

Approach	EB	WB	NB
HCM Control Delay, s	0	0	$ 311.9
HCM LOS			F

Minor Lane/Major Mvmt	NBLn1	NBLn2	EBT	WBT
Capacity (veh/h)	22	246	-	-
HCM Lane V/C Ratio	1.285	0.093	-	-
HCM Control Delay (s)	$ 546.8	21.1	-	-
HCM Lane LOS	F	C	-	-
HCM 95th %tile Q(veh)	3.7	0.3	-	-

Notes			
~: Volume exceeds capacity	$: Delay exceeds 300s	+: Computation Not Defined	*: All major volume in platoon

Intersection	
Int Delay, s/veh	0

Movement	EBL	EBT	WBT	WBR	SBL	SBR
Lane Configurations		↑↑	↑↑			↱
Traffic Vol, veh/h	0	1837	1059	24	0	3
Future Vol, veh/h	0	1837	1059	24	0	3
Conflicting Peds, #/hr	0	0	0	0	0	0
Sign Control	Free	Free	Free	Free	Stop	Stop
RT Channelized	-	None	-	None	-	None
Storage Length	-	-	-	-	-	0
Veh in Median Storage, #	-	0	0	-	0	-
Grade, %	-	0	0	-	0	-
Peak Hour Factor	92	92	92	92	92	92
Heavy Vehicles, %	2	2	2	2	2	2
Mvmt Flow	0	1997	1151	26	0	3

Major/Minor	Major1		Major2		Minor2	
Conflicting Flow All	-	0	-	0	-	589
Stage 1	-	-	-	-	-	-
Stage 2	-	-	-	-	-	-
Critical Hdwy	-	-	-	-	-	6.94
Critical Hdwy Stg 1	-	-	-	-	-	-
Critical Hdwy Stg 2	-	-	-	-	-	-
Follow-up Hdwy	-	-	-	-	-	3.32
Pot Cap-1 Maneuver	0	-	-	-	0	452
Stage 1	0	-	-	-	0	-
Stage 2	0	-	-	-	0	-
Platoon blocked, %		-	-	-		
Mov Cap-1 Maneuver	-	-	-	-	-	452
Mov Cap-2 Maneuver	-	-	-	-	-	-
Stage 1	-	-	-	-	-	-
Stage 2	-	-	-	-	-	-

Approach	EB	WB	SB
HCM Control Delay, s	0	0	13
HCM LOS			B

Minor Lane/Major Mvmt	EBT	WBT	WBR	SBLn1
Capacity (veh/h)	-	-	-	452
HCM Lane V/C Ratio	-	-	-	0.007
HCM Control Delay (s)	-	-	-	13
HCM Lane LOS	-	-	-	B
HCM 95th %tile Q(veh)	-	-	-	0

Movement	EBL	EBT	EBR	WBL	WBT	WBR	NBL	NBT	NBR	SBL	SBT	SBR
Lane Configurations												
Traffic Volume (veh/h)	204	1425	208	128	820	149	179	106	185	124	64	84
Future Volume (veh/h)	204	1425	208	128	820	149	179	106	185	124	64	84
Number	1	6	16	5	2	12	7	4	14	3	8	18
Initial Q (Qb), veh	0	0	0	0	0	0	0	0	0	0	0	0
Ped-Bike Adj(A_pbT)	1.00		1.00	1.00		1.00	1.00		1.00	1.00		1.00
Parking Bus, Adj	1.00	1.00	1.00	1.00	1.00	1.00	1.00	1.00	1.00	1.00	1.00	1.00
Adj Sat Flow, veh/h/ln	1863	1863	1900	1863	1863	1900	1863	1863	1863	1863	1863	1863
Adj Flow Rate, veh/h	219	1532	224	135	863	157	201	119	208	143	74	97
Adj No. of Lanes	1	2	0	1	2	0	1	1	1	1	1	1
Peak Hour Factor	0.93	0.93	0.93	0.95	0.95	0.95	0.89	0.89	0.89	0.87	0.87	0.87
Percent Heavy Veh, %	2	2	2	2	2	2	2	2	2	2	2	2
Cap, veh/h	442	1740	250	303	1860	338	299	198	168	249	147	125
Arrive On Green	0.08	0.56	0.56	0.26	1.00	1.00	0.11	0.11	0.11	0.09	0.08	0.08
Sat Flow, veh/h	1774	3106	447	1774	2992	544	1774	1863	1583	1774	1863	1583
Grp Volume(v), veh/h	219	862	894	135	510	510	201	119	208	143	74	97
Grp Sat Flow(s),veh/h/ln	1774	1770	1784	1774	1770	1767	1774	1863	1583	1774	1863	1583
Q Serve(g_s), s	9.4	62.7	66.3	2.4	0.0	0.0	15.2	9.1	12.5	11.0	5.7	9.0
Cycle Q Clear(g_c), s	9.4	62.7	66.3	2.4	0.0	0.0	15.2	9.1	12.5	11.0	5.7	9.0
Prop In Lane	1.00		0.25	1.00		0.31	1.00		1.00	1.00		1.00
Lane Grp Cap(c), veh/h	442	991	999	303	1100	1098	299	198	168	249	147	125
V/C Ratio(X)	0.50	0.87	0.89	0.45	0.46	0.46	0.67	0.60	1.24	0.58	0.50	0.77
Avail Cap(c_a), veh/h	562	991	999	303	1100	1098	299	310	264	249	261	222
HCM Platoon Ratio	1.00	1.00	1.00	2.00	2.00	2.00	1.00	1.00	1.00	1.00	1.00	1.00
Upstream Filter(I)	1.00	1.00	1.00	0.68	0.68	0.68	1.00	1.00	1.00	1.00	1.00	1.00
Uniform Delay (d), s/veh	17.1	28.3	29.1	47.3	0.0	0.0	53.6	64.0	41.1	56.9	66.2	67.7
Incr Delay (d2), s/veh	0.9	10.3	12.2	0.7	1.0	1.0	5.8	4.1	137.2	3.2	3.7	13.4
Initial Q Delay(d3),s/veh	0.0	0.0	0.0	0.0	0.0	0.0	0.0	0.0	0.0	0.0	0.0	0.0
%ile BackOfQ(50%),veh/ln	4.7	33.3	35.9	4.4	0.3	0.3	8.0	5.0	12.6	5.6	3.1	4.4
LnGrp Delay(d),s/veh	18.0	38.7	41.3	48.0	1.0	1.0	59.4	68.1	178.3	60.1	70.0	81.1
LnGrp LOS	B	D	D	D	A	A	E	E	F	E	E	F
Approach Vol, veh/h		1975			1155			528			314	
Approach Delay, s/veh		37.5			6.5			108.2			68.9	
Approach LOS		D			A			F			E	

Timer	1	2	3	4	5	6	7	8
Assigned Phs	1	2	3	4	5	6	7	8
Phs Duration (G+Y+Rc), s	14.9	98.3	15.9	20.9	24.1	89.0	20.0	16.9
Change Period (Y+Rc), s	3.0	5.0	3.0	5.0	5.0	* 5	3.0	5.0
Max Green Setting (Gmax), s	22.0	74.0	13.0	25.0	12.0	* 84	17.0	21.0
Max Q Clear Time (g_c+I1), s	11.4	2.0	13.0	14.5	4.4	68.3	17.2	11.0
Green Ext Time (p_c), s	0.4	12.7	0.0	1.4	0.2	12.8	0.0	0.6

Intersection Summary	
HCM 2010 Ctrl Delay	40.4
HCM 2010 LOS	D

Notes

* HCM 2010 computational engine requires equal clearance times for the phases crossing the barrier.

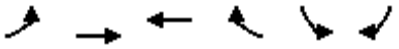

Movement	EBL	EBT	WBT	WBR	SBL	SBR
Lane Configurations						
Traffic Volume (veh/h)	230	1504	999	323	241	112
Future Volume (veh/h)	230	1504	999	323	241	112
Number	1	6	2	12	3	18
Initial Q (Qb), veh	0	0	0	0	0	0
Ped-Bike Adj(A_pbT)	1.00			1.00	1.00	1.00
Parking Bus, Adj	1.00	1.00	1.00	1.00	1.00	1.00
Adj Sat Flow, veh/h/ln	1863	1863	1863	1900	1863	1863
Adj Flow Rate, veh/h	240	1567	1063	344	259	120
Adj No. of Lanes	1	2	2	0	1	1
Peak Hour Factor	0.96	0.96	0.94	0.94	0.93	0.93
Percent Heavy Veh, %	2	2	2	2	2	2
Cap, veh/h	496	2733	1390	445	286	591
Arrive On Green	0.42	1.00	0.53	0.53	0.16	0.16
Sat Flow, veh/h	1774	3632	2732	845	1774	1583
Grp Volume(v), veh/h	240	1567	709	698	259	120
Grp Sat Flow(s),veh/h/ln	1774	1770	1770	1714	1774	1583
Q Serve(g_s), s	2.1	0.0	47.5	48.8	21.5	0.0
Cycle Q Clear(g_c), s	2.1	0.0	47.5	48.8	21.5	0.0
Prop In Lane	1.00			0.49	1.00	1.00
Lane Grp Cap(c), veh/h	496	2733	932	903	286	591
V/C Ratio(X)	0.48	0.57	0.76	0.77	0.91	0.20
Avail Cap(c_a), veh/h	496	2733	932	903	390	684
HCM Platoon Ratio	2.00	2.00	1.00	1.00	1.00	1.00
Upstream Filter(I)	0.51	0.51	1.00	1.00	1.00	1.00
Uniform Delay (d), s/veh	29.9	0.0	28.0	28.3	61.8	31.9
Incr Delay (d2), s/veh	0.3	0.4	5.8	6.4	18.5	0.1
Initial Q Delay(d3),s/veh	0.0	0.0	0.0	0.0	0.0	0.0
%ile BackOfQ(50%),veh/ln	5.9	0.2	24.6	24.7	12.0	3.4
LnGrp Delay(d),s/veh	30.1	0.4	33.9	34.7	80.3	32.0
LnGrp LOS	C	A	C	C	F	C
Approach Vol, veh/h		1807	1407		379	
Approach Delay, s/veh		4.4	34.3		65.0	
Approach LOS		A	C		E	

Timer	1	2	3	4	5	6	7	8
Assigned Phs	1	2				6		8
Phs Duration (G+Y+Rc), s	36.8	84.0				120.8		29.2
Change Period (Y+Rc), s	5.0	* 5				5.0		5.0
Max Green Setting (Gmax), s	25.8	* 79				107.0		33.0
Max Q Clear Time (g_c+I1), s	4.1	50.8				2.0		23.5
Green Ext Time (p_c), s	0.5	3.3				4.9		0.6

Intersection Summary	
HCM 2010 Ctrl Delay	22.5
HCM 2010 LOS	C

Notes

* HCM 2010 computational engine requires equal clearance times for the phases crossing the barrier.

Intersection	
Int Delay, s/veh	2

Movement	EBL	EBT	WBT	WBR	SBL	SBR
Lane Configurations						
Traffic Vol, veh/h	98	1647	1277	16	8	45
Future Vol, veh/h	98	1647	1277	16	8	45
Conflicting Peds, #/hr	0	0	0	0	0	0
Sign Control	Free	Free	Free	Free	Stop	Stop
RT Channelized	-	None	-	None	-	None
Storage Length	100	-	-	-	0	-
Veh in Median Storage, #	-	0	0	-	0	-
Grade, %	-	0	0	-	0	-
Peak Hour Factor	92	92	92	92	92	92
Heavy Vehicles, %	2	2	2	2	2	2
Mvmt Flow	107	1790	1388	17	9	49

Major/Minor	Major1		Major2		Minor2	
Conflicting Flow All	1405	0	-	0	2506	703
Stage 1	-	-	-	-	1397	-
Stage 2	-	-	-	-	1109	-
Critical Hdwy	4.14	-	-	-	6.84	6.94
Critical Hdwy Stg 1	-	-	-	-	5.84	-
Critical Hdwy Stg 2	-	-	-	-	5.84	-
Follow-up Hdwy	2.22	-	-	-	3.52	3.32
Pot Cap-1 Maneuver	482	-	-	-	23	380
Stage 1	-	-	-	-	194	-
Stage 2	-	-	-	-	277	-
Platoon blocked, %			-	-	-	
Mov Cap-1 Maneuver	482	-	-	-	18	380
Mov Cap-2 Maneuver	-	-	-	-	18	-
Stage 1	-	-	-	-	151	-
Stage 2	-	-	-	-	277	-

Approach	EB	WB	SB
HCM Control Delay, s	0.8	0	90.9
HCM LOS			F

Minor Lane/Major Mvmt	EBL	EBT	WBT	WBR	SBLn1
Capacity (veh/h)	482	-	-	-	94
HCM Lane V/C Ratio	0.221	-	-	-	0.613
HCM Control Delay (s)	14.6	-	-	-	90.9
HCM Lane LOS	B	-	-	-	F
HCM 95th %tile Q(veh)	0.8	-	-	-	2.9

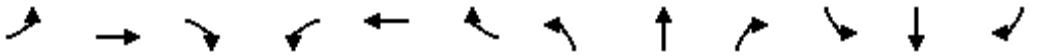

Movement	EBL	EBT	EBR	WBL	WBT	WBR	NBL	NBT	NBR	SBL	SBT	SBR
Lane Configurations												
Traffic Volume (vph)	90	1518	47	73	1173	115	69	18	78	52	4	51
Future Volume (vph)	90	1518	47	73	1173	115	69	18	78	52	4	51
Ideal Flow (vphpl)	1900	1900	1900	1900	1900	1900	1900	1900	1900	1900	1900	1900
Total Lost time (s)	4.5	5.0		4.5	5.0			6.0	6.0		6.0	6.0
Lane Util. Factor	1.00	0.95		1.00	0.95			1.00	1.00		1.00	1.00
Frt	1.00	1.00		1.00	0.99			1.00	0.85		1.00	0.85
Flt Protected	0.95	1.00		0.95	1.00			0.96	1.00		0.96	1.00
Satd. Flow (prot)	1770	3523		1770	3492			1792	1583		1780	1583
Flt Permitted	0.15	1.00		0.10	1.00			0.96	1.00		0.96	1.00
Satd. Flow (perm)	288	3523		177	3492			1792	1583		1780	1583
Peak-hour factor, PHF	0.95	0.95	0.95	0.96	0.96	0.96	0.83	0.83	0.83	0.91	0.91	0.91
Adj. Flow (vph)	95	1598	49	76	1222	120	83	22	94	57	4	56
RTOR Reduction (vph)	0	1	0	0	3	0	0	0	86	0	0	53
Lane Group Flow (vph)	95	1646	0	76	1339	0	0	105	8	0	61	3
Turn Type	pm+pt	NA		pm+pt	NA		Split	NA	Perm	Split	NA	Perm
Protected Phases	1	6		5	2		4	4		3	3	
Permitted Phases	6			2					4			3
Actuated Green, G (s)	132.1	125.6		132.1	125.6			15.4	15.4		11.0	11.0
Effective Green, g (s)	132.1	125.6		132.1	125.6			15.4	15.4		11.0	11.0
Actuated g/C Ratio	0.73	0.70		0.73	0.70			0.09	0.09		0.06	0.06
Clearance Time (s)	4.5	5.0		4.5	5.0			6.0	6.0		6.0	6.0
Vehicle Extension (s)	3.0	1.0		3.0	1.0			2.5	2.5		2.5	2.5
Lane Grp Cap (vph)	264	2458		187	2436			153	135		108	96
v/s Ratio Prot	0.01	c0.47		c0.01	0.38			c0.06			c0.03	
v/s Ratio Perm	0.25			0.28					0.01			0.00
v/c Ratio	0.36	0.67		0.41	0.55			0.69	0.06		0.56	0.04
Uniform Delay, d1	22.6	15.4		33.4	13.3			80.0	75.6		82.2	79.5
Progression Factor	1.00	1.00		1.00	1.00			1.00	1.00		1.00	1.00
Incremental Delay, d2	0.8	1.5		1.4	0.9			11.1	0.1		5.4	0.1
Delay (s)	23.4	16.9		34.8	14.2			91.0	75.8		87.6	79.6
Level of Service	C	B		C	B			F	E		F	E
Approach Delay (s)		17.3			15.3			83.8			83.8	
Approach LOS		B			B			F			F	

Intersection Summary			
HCM 2000 Control Delay	22.5	HCM 2000 Level of Service	C
HCM 2000 Volume to Capacity ratio	0.65		
Actuated Cycle Length (s)	180.0	Sum of lost time (s)	21.5
Intersection Capacity Utilization	72.0%	ICU Level of Service	C
Analysis Period (min)	15		

c Critical Lane Group

Movement	EBT	EBR	WBL	WBT	NBL	NBR
Lane Configurations						
Traffic Volume (veh/h)	1385	263	251	1124	237	353
Future Volume (veh/h)	1385	263	251	1124	237	353
Number	6	16	5	2	7	14
Initial Q (Qb), veh	0	0	0	0	0	0
Ped-Bike Adj(A_pbT)		1.00	1.00		1.00	1.00
Parking Bus, Adj	1.00	1.00	1.00	1.00	1.00	1.00
Adj Sat Flow, veh/h/ln	1863	1900	1863	1863	1863	1863
Adj Flow Rate, veh/h	1428	271	276	1235	260	388
Adj No. of Lanes	2	0	1	2	1	1
Peak Hour Factor	0.97	0.97	0.91	0.91	0.91	0.91
Percent Heavy Veh, %	2	2	2	2	2	2
Cap, veh/h	1628	304	414	2725	290	559
Arrive On Green	0.55	0.55	0.38	1.00	0.16	0.16
Sat Flow, veh/h	3072	555	1774	3632	1774	1583
Grp Volume(v), veh/h	838	861	276	1235	260	388
Grp Sat Flow(s),veh/h/ln	1770	1765	1774	1770	1774	1583
Q Serve(g_s), s	61.2	64.8	11.5	0.0	21.6	3.0
Cycle Q Clear(g_c), s	61.2	64.8	11.5	0.0	21.6	3.0
Prop In Lane		0.31	1.00		1.00	1.00
Lane Grp Cap(c), veh/h	967	965	414	2725	290	559
V/C Ratio(X)	0.87	0.89	0.67	0.45	0.90	0.69
Avail Cap(c_a), veh/h	967	965	414	2725	343	607
HCM Platoon Ratio	1.00	1.00	2.00	2.00	1.00	1.00
Upstream Filter(I)	0.71	0.71	0.83	0.83	1.00	1.00
Uniform Delay (d), s/veh	29.3	30.1	38.8	0.0	61.5	41.5
Incr Delay (d2), s/veh	7.6	9.2	2.7	0.5	21.9	2.8
Initial Q Delay(d3),s/veh	0.0	0.0	0.0	0.0	0.0	0.0
%ile BackOfQ(50%),veh/ln	31.8	33.8	9.0	0.2	12.3	17.5
LnGrp Delay(d),s/veh	36.8	39.3	41.6	0.5	83.4	44.4
LnGrp LOS	D	D	D	A	F	D
Approach Vol, veh/h	1699			1511	648	
Approach Delay, s/veh	38.1			8.0	60.0	
Approach LOS	D			A	E	

Timer	1	2	3	4	5	6	7	8
Assigned Phs		2		4	5	6		
Phs Duration (G+Y+Rc), s		120.5		29.5	33.5	87.0		
Change Period (Y+Rc), s		5.0		5.0	5.0	* 5		
Max Green Setting (Gmax), s		111.0		29.0	26.0	* 82		
Max Q Clear Time (g_c+I1), s		2.0		23.6	13.5	66.8		
Green Ext Time (p_c), s		3.4		1.0	0.3	3.9		

Intersection Summary	
HCM 2010 Ctrl Delay	30.0
HCM 2010 LOS	C

Notes

* HCM 2010 computational engine requires equal clearance times for the phases crossing the barrier.

Movement	EBL	EBT	EBR	WBL	WBT	WBR	NBL	NBT	NBR	SBL	SBT	SBR
Lane Configurations												
Traffic Volume (veh/h)	81	1352	305	123	1245	23	104	1	92	12	4	26
Future Volume (veh/h)	81	1352	305	123	1245	23	104	1	92	12	4	26
Number	1	6	16	5	2	12	7	4	14	3	8	18
Initial Q (Qb), veh	0	0	0	0	0	0	0	0	0	0	0	0
Ped-Bike Adj(A_pbT)	1.00		1.00	1.00		1.00	1.00		1.00	1.00		1.00
Parking Bus, Adj	1.00	1.00	1.00	1.00	1.00	1.00	1.00	1.00	1.00	1.00	1.00	1.00
Adj Sat Flow, veh/h/ln	1863	1863	1900	1863	1863	1900	1863	1863	1900	1900	1863	1900
Adj Flow Rate, veh/h	89	1486	335	129	1311	24	124	1	110	18	6	39
Adj No. of Lanes	1	2	0	1	2	0	1	1	0	0	1	0
Peak Hour Factor	0.91	0.91	0.91	0.95	0.95	0.95	0.84	0.84	0.84	0.67	0.67	0.67
Percent Heavy Veh, %	2	2	2	2	2	2	2	2	2	2	2	2
Cap, veh/h	305	2122	465	295	2616	48	193	2	207	59	30	95
Arrive On Green	0.07	1.00	1.00	0.02	0.49	0.49	0.13	0.13	0.13	0.13	0.13	0.13
Sat Flow, veh/h	1774	2888	633	1774	3556	65	1356	14	1571	217	228	722
Grp Volume(v), veh/h	89	894	927	129	652	683	124	0	111	63	0	0
Grp Sat Flow(s),veh/h/ln	1774	1770	1751	1774	1770	1851	1356	0	1585	1167	0	0
Q Serve(g_s), s	1.9	0.0	0.0	2.7	37.2	37.3	6.9	0.0	9.8	0.5	0.0	0.0
Cycle Q Clear(g_c), s	1.9	0.0	0.0	2.7	37.2	37.3	17.2	0.0	9.8	10.3	0.0	0.0
Prop In Lane	1.00		0.36	1.00		0.04	1.00		0.99	0.29		0.62
Lane Grp Cap(c), veh/h	305	1301	1287	295	1302	1362	193	0	209	185	0	0
V/C Ratio(X)	0.29	0.69	0.72	0.44	0.50	0.50	0.64	0.00	0.53	0.34	0.00	0.00
Avail Cap(c_a), veh/h	341	1301	1287	389	1302	1362	276	0	307	277	0	0
HCM Platoon Ratio	2.00	2.00	2.00	0.67	0.67	0.67	1.00	1.00	1.00	1.00	1.00	1.00
Upstream Filter(I)	0.46	0.46	0.46	1.00	1.00	1.00	1.00	0.00	1.00	1.00	0.00	0.00
Uniform Delay (d), s/veh	9.8	0.0	0.0	4.4	19.5	19.5	65.0	0.0	60.8	59.0	0.0	0.0
Incr Delay (d2), s/veh	0.1	1.4	1.7	0.4	1.4	1.3	2.7	0.0	1.6	0.8	0.0	0.0
Initial Q Delay(d3),s/veh	0.0	0.0	0.0	0.0	0.0	0.0	0.0	0.0	0.0	0.0	0.0	0.0
%ile BackOfQ(50%),veh/ln	1.1	0.5	0.6	1.3	18.7	19.6	5.2	0.0	4.4	2.5	0.0	0.0
LnGrp Delay(d),s/veh	9.9	1.4	1.7	4.8	20.9	20.8	67.6	0.0	62.3	59.8	0.0	0.0
LnGrp LOS	A	A	A	A	C	C	E		E	E		
Approach Vol, veh/h		1910			1464			235			63	
Approach Delay, s/veh		1.9			19.4			65.1			59.8	
Approach LOS		A			B			E			E	

Timer	1	2	3	4	5	6	7	8
Assigned Phs	1	2		4	5	6		8
Phs Duration (G+Y+Rc), s	7.9	116.3		25.8	8.0	116.2		25.8
Change Period (Y+Rc), s	3.0	6.0		6.0	3.0	6.0		6.0
Max Green Setting (Gmax), s	8.6	98.0		29.0	13.0	93.0		29.0
Max Q Clear Time (g_c+I1), s	3.9	39.3		19.2	4.7	2.0		12.3
Green Ext Time (p_c), s	0.0	2.9		0.5	0.1	5.1		0.2

Intersection Summary		
HCM 2010 Ctrl Delay	13.9	
HCM 2010 LOS	B	

Movement	EBL	EBT	EBR	WBL	WBT	WBR	NBL	NBT	NBR	SBL	SBT	SBR
Lane Configurations												
Traffic Volume (veh/h)	7	1187	262	370	1206	8	174	0	235	4	5	11
Future Volume (veh/h)	7	1187	262	370	1206	8	174	0	235	4	5	11
Number	1	6	16	5	2	12	7	4	14	3	8	18
Initial Q (Qb), veh	0	0	0	0	0	0	0	0	0	0	0	0
Ped-Bike Adj(A_pbT)	1.00		1.00	1.00		1.00	1.00		1.00	1.00		1.00
Parking Bus, Adj	1.00	1.00	1.00	1.00	1.00	1.00	1.00	1.00	1.00	1.00	1.00	1.00
Adj Sat Flow, veh/h/ln	1863	1863	1900	1863	1863	1900	1863	1863	1863	1900	1863	1900
Adj Flow Rate, veh/h	7	1249	276	389	1269	8	185	0	250	5	6	14
Adj No. of Lanes	1	2	0	1	2	0	1	1	1	0	1	0
Peak Hour Factor	0.95	0.95	0.95	0.95	0.95	0.95	0.94	0.94	0.94	0.81	0.81	0.81
Percent Heavy Veh, %	2	2	2	2	2	2	2	2	2	2	2	2
Cap, veh/h	246	1329	290	473	2740	17	293	323	275	66	82	152
Arrive On Green	0.31	0.31	0.31	0.53	1.00	1.00	0.17	0.00	0.17	0.17	0.17	0.17
Sat Flow, veh/h	431	2890	631	1774	3606	23	1386	1863	1583	215	475	878
Grp Volume(v), veh/h	7	759	766	389	623	654	185	0	250	25	0	0
Grp Sat Flow(s),veh/h/ln	431	1770	1751	1774	1770	1859	1386	1863	1583	1567	0	0
Q Serve(g_s), s	1.7	62.5	64.2	27.4	0.0	0.0	16.6	0.0	23.2	0.0	0.0	0.0
Cycle Q Clear(g_c), s	1.7	62.5	64.2	27.4	0.0	0.0	18.5	0.0	23.2	1.9	0.0	0.0
Prop In Lane	1.00		0.36	1.00		0.01	1.00		1.00	0.20		0.56
Lane Grp Cap(c), veh/h	246	814	806	473	1345	1412	293	323	275	301	0	0
V/C Ratio(X)	0.03	0.93	0.95	0.82	0.46	0.46	0.63	0.00	0.91	0.08	0.00	0.00
Avail Cap(c_a), veh/h	246	814	806	473	1345	1412	339	385	327	351	0	0
HCM Platoon Ratio	0.67	0.67	0.67	2.00	2.00	2.00	1.00	1.00	1.00	1.00	1.00	1.00
Upstream Filter(I)	1.00	1.00	1.00	0.62	0.62	0.62	1.00	0.00	1.00	1.00	0.00	0.00
Uniform Delay (d), s/veh	28.6	49.6	50.2	32.1	0.0	0.0	58.7	0.0	60.8	52.0	0.0	0.0
Incr Delay (d2), s/veh	0.2	18.8	21.8	6.8	0.7	0.7	3.0	0.0	25.6	0.1	0.0	0.0
Initial Q Delay(d3),s/veh	0.0	0.0	0.0	0.0	0.0	0.0	0.0	0.0	0.0	0.0	0.0	0.0
%ile BackOfQ(50%),veh/ln	0.2	34.9	35.9	14.1	0.3	0.3	7.5	0.0	12.2	0.9	0.0	0.0
LnGrp Delay(d),s/veh	28.8	68.5	72.0	38.9	0.7	0.7	61.6	0.0	86.5	52.1	0.0	0.0
LnGrp LOS	C	E	E	D	A	A	E		F	D		
Approach Vol, veh/h		1532			1666			435			25	
Approach Delay, s/veh		70.0			9.6			75.9			52.1	
Approach LOS		E			A			E			D	

Timer	1	2	3	4	5	6	7	8
Assigned Phs		2		4	5	6		8
Phs Duration (G+Y+Rc), s		119.0		31.0	45.0	74.0		31.0
Change Period (Y+Rc), s		5.0		5.0	5.0	* 5		5.0
Max Green Setting (Gmax), s		109.0		31.0	37.0	* 69		31.0
Max Q Clear Time (g_c+I1), s		2.0		25.2	29.4	66.2		3.9
Green Ext Time (p_c), s		2.7		0.8	0.4	1.3		0.1

Intersection Summary	
HCM 2010 Ctrl Delay	43.1
HCM 2010 LOS	D

Notes

* HCM 2010 computational engine requires equal clearance times for the phases crossing the barrier.

Movement	EBL	EBT	EBR	WBL	WBT	WBR	NBL	NBT	NBR	SBL	SBT	SBR
Lane Configurations												
Traffic Volume (veh/h)	69	1357	0	45	1521	202	2	0	34	112	0	61
Future Volume (veh/h)	69	1357	0	45	1521	202	2	0	34	112	0	61
Number	1	6	16	5	2	12	7	4	14	3	8	18
Initial Q (Qb), veh	0	0	0	0	0	0	0	0	0	0	0	0
Ped-Bike Adj(A_pbT)	1.00		1.00	1.00		1.00	1.00		1.00	1.00		1.00
Parking Bus, Adj	1.00	1.00	1.00	1.00	1.00	1.00	1.00	1.00	1.00	1.00	1.00	1.00
Adj Sat Flow, veh/h/ln	1863	1863	1900	1863	1863	1900	1900	1863	1900	1863	1863	1900
Adj Flow Rate, veh/h	73	1444	0	48	1618	215	3	0	48	138	0	75
Adj No. of Lanes	1	2	0	1	2	0	0	1	0	1	1	0
Peak Hour Factor	0.94	0.94	0.94	0.94	0.94	0.94	0.71	0.71	0.71	0.81	0.81	0.81
Percent Heavy Veh, %	2	2	2	2	2	2	2	2	2	2	2	2
Cap, veh/h	204	2477	0	435	2419	316	29	7	169	207	0	180
Arrive On Green	0.06	1.00	0.00	0.09	0.77	0.77	0.11	0.00	0.11	0.11	0.00	0.11
Sat Flow, veh/h	1774	3632	0	1774	3149	411	30	63	1494	1352	0	1583
Grp Volume(v), veh/h	73	1444	0	48	897	936	51	0	0	138	0	75
Grp Sat Flow(s),veh/h/ln	1774	1770	0	1774	1770	1790	1587	0	0	1352	0	1583
Q Serve(g_s), s	2.0	0.0	0.0	0.0	35.8	38.1	0.0	0.0	0.0	10.1	0.0	6.6
Cycle Q Clear(g_c), s	2.0	0.0	0.0	0.0	35.8	38.1	4.4	0.0	0.0	14.4	0.0	6.6
Prop In Lane	1.00		0.00	1.00		0.23	0.06		0.94	1.00		1.00
Lane Grp Cap(c), veh/h	204	2477	0	435	1359	1375	205	0	0	207	0	180
V/C Ratio(X)	0.36	0.58	0.00	0.11	0.66	0.68	0.25	0.00	0.00	0.67	0.00	0.42
Avail Cap(c_a), veh/h	254	2477	0	435	1359	1375	310	0	0	297	0	285
HCM Platoon Ratio	2.00	2.00	2.00	1.00	1.00	1.00	1.00	1.00	1.00	1.00	1.00	1.00
Upstream Filter(I)	0.48	0.48	0.00	1.00	1.00	1.00	1.00	0.00	0.00	1.00	0.00	1.00
Uniform Delay (d), s/veh	14.3	0.0	0.0	6.7	8.2	8.4	60.9	0.0	0.0	65.2	0.0	61.9
Incr Delay (d2), s/veh	0.5	0.5	0.0	0.1	2.5	2.7	0.6	0.0	0.0	3.7	0.0	1.5
Initial Q Delay(d3),s/veh	0.0	0.0	0.0	0.0	0.0	0.0	0.0	0.0	0.0	0.0	0.0	0.0
%ile BackOfQ(50%),veh/ln	1.1	0.2	0.0	0.6	18.1	19.5	2.0	0.0	0.0	5.8	0.0	3.0
LnGrp Delay(d),s/veh	14.8	0.5	0.0	6.8	10.7	11.2	61.5	0.0	0.0	68.8	0.0	63.4
LnGrp LOS	B	A		A	B	B	E			E		E
Approach Vol, veh/h		1517			1881			51			213	
Approach Delay, s/veh		1.2			10.8			61.5			66.9	
Approach LOS		A			B			E			E	

Timer	1	2	3	4	5	6	7	8
Assigned Phs	1	2		4	5	6		8
Phs Duration (G+Y+Rc), s	7.8	120.2		22.0	18.0	110.0		22.0
Change Period (Y+Rc), s	3.0	5.0		5.0	5.0	* 5		5.0
Max Green Setting (Gmax), s	9.6	101.0		27.0	5.0*	1.1E2		27.0
Max Q Clear Time (g_c+I1), s	4.0	40.1		6.4	2.0	2.0		16.4
Green Ext Time (p_c), s	0.0	24.0		0.2	0.0	16.5		0.6

Intersection Summary		
HCM 2010 Ctrl Delay	10.8	
HCM 2010 LOS	B	

Notes

* HCM 2010 computational engine requires equal clearance times for the phases crossing the barrier.

Movement	EBL	EBT	EBR	WBL	WBT	WBR	NBL	NBT	NBR	SBL	SBT	SBR
Lane Configurations												
Traffic Volume (veh/h)	463	934	148	392	1067	156	347	921	302	210	990	315
Future Volume (veh/h)	463	934	148	392	1067	156	347	921	302	210	990	315
Number	3	8	18	7	4	14	1	6	16	5	2	12
Initial Q (Qb), veh	0	0	0	0	0	0	0	0	0	0	0	0
Ped-Bike Adj(A_pbT)	1.00		1.00	1.00		1.00	1.00		1.00	1.00		1.00
Parking Bus, Adj	1.00	1.00	1.00	1.00	1.00	1.00	1.00	1.00	1.00	1.00	1.00	1.00
Adj Sat Flow, veh/h/ln	1863	1863	1900	1863	1863	1900	1863	1863	1900	1863	1863	1900
Adj Flow Rate, veh/h	503	1015	161	417	1135	166	361	959	315	219	1031	328
Adj No. of Lanes	2	3	0	2	3	0	2	3	0	2	3	0
Peak Hour Factor	0.92	0.92	0.92	0.94	0.94	0.94	0.96	0.96	0.96	0.96	0.96	0.96
Percent Heavy Veh, %	2	2	2	2	2	2	2	2	2	2	2	2
Cap, veh/h	537	1280	203	463	1200	175	391	1352	443	267	1227	390
Arrive On Green	0.16	0.29	0.29	0.13	0.27	0.27	0.11	0.36	0.36	0.08	0.32	0.32
Sat Flow, veh/h	3442	4428	701	3442	4482	655	3442	3791	1243	3442	3823	1216
Grp Volume(v), veh/h	503	777	399	417	858	443	361	858	416	219	914	445
Grp Sat Flow(s),veh/h/ln	1721	1695	1739	1721	1695	1747	1721	1695	1643	1721	1695	1648
Q Serve(g_s), s	20.4	29.8	29.9	16.8	35.0	35.0	14.6	30.7	30.8	8.8	35.4	35.4
Cycle Q Clear(g_c), s	20.4	29.8	29.9	16.8	35.0	35.0	14.6	30.7	30.8	8.8	35.4	35.4
Prop In Lane	1.00		0.40	1.00		0.38	1.00		0.76	1.00		0.74
Lane Grp Cap(c), veh/h	537	980	503	463	908	468	391	1209	586	267	1088	529
V/C Ratio(X)	0.94	0.79	0.79	0.90	0.95	0.95	0.92	0.71	0.71	0.82	0.84	0.84
Avail Cap(c_a), veh/h	537	980	503	488	914	471	391	1209	586	342	1088	529
HCM Platoon Ratio	1.00	1.00	1.00	1.00	1.00	1.00	1.00	1.00	1.00	1.00	1.00	1.00
Upstream Filter(I)	1.00	1.00	1.00	1.00	1.00	1.00	1.00	1.00	1.00	1.00	1.00	1.00
Uniform Delay (d), s/veh	58.8	46.2	46.3	60.1	50.6	50.6	61.9	39.1	39.1	64.0	44.5	44.5
Incr Delay (d2), s/veh	24.0	4.5	8.6	18.6	18.0	28.3	27.0	3.5	7.1	9.3	7.8	14.9
Initial Q Delay(d3),s/veh	0.0	0.0	0.0	0.0	0.0	0.0	0.0	0.0	0.0	0.0	0.0	0.0
%ile BackOfQ(50%),veh/ln	11.5	14.5	15.5	9.2	18.6	20.6	8.4	15.0	15.2	4.5	17.7	18.2
LnGrp Delay(d),s/veh	82.9	50.7	54.8	78.7	68.6	78.9	88.9	42.6	46.2	73.3	52.4	59.4
LnGrp LOS	F	D	D	E	E	E	F	D	D	E	D	E
Approach Vol, veh/h		1679			1718			1635			1578	
Approach Delay, s/veh		61.3			73.7			53.7			57.3	
Approach LOS		E			E			D			E	

Timer	1	2	3	4	5	6	7	8
Assigned Phs	1	2	3	4	5	6	7	8
Phs Duration (G+Y+Rc), s	20.0	51.3	26.0	43.7	15.0	56.3	23.0	46.8
Change Period (Y+Rc), s	4.0	6.0	4.0	6.0	4.0	6.0	4.0	6.0
Max Green Setting (Gmax), s	16.0	45.0	22.0	38.0	14.0	47.0	20.0	39.0
Max Q Clear Time (g_c+I1), s	16.6	37.4	22.4	37.0	10.8	32.8	18.8	31.9
Green Ext Time (p_c), s	0.0	2.4	0.0	0.7	0.1	2.9	0.2	4.0

Intersection Summary	
HCM 2010 Ctrl Delay	61.7
HCM 2010 LOS	E

Movement	EBL	EBT	EBR	WBL	WBT	WBR	NBL	NBT	NBR	SBL	SBT	SBR
Lane Configurations												
Traffic Volume (veh/h)	212	1182	44	0	1228	166	187	76	7	91	30	188
Future Volume (veh/h)	212	1182	44	0	1228	166	187	76	7	91	30	188
Number	1	6	16	5	2	12	7	4	14	3	8	18
Initial Q (Qb), veh	0	0	0	0	0	0	0	0	0	0	0	0
Ped-Bike Adj(A_pbT)	1.00		1.00	1.00		1.00	1.00		1.00	1.00		1.00
Parking Bus, Adj	1.00	1.00	1.00	1.00	1.00	1.00	1.00	1.00	1.00	1.00	1.00	1.00
Adj Sat Flow, veh/h/ln	1863	1863	1900	0	1863	1900	1863	1863	1863	1863	1863	1863
Adj Flow Rate, veh/h	221	1231	46	0	1320	178	215	87	8	99	33	204
Adj No. of Lanes	1	2	0	0	2	0	1	1	1	1	1	1
Peak Hour Factor	0.96	0.96	0.96	0.93	0.93	0.93	0.87	0.87	0.87	0.92	0.92	0.92
Percent Heavy Veh, %	2	2	2	0	2	2	2	2	2	2	2	2
Cap, veh/h	248	2380	89	0	1851	248	318	269	229	117	228	290
Arrive On Green	0.06	0.68	0.68	0.00	0.59	0.59	0.09	0.14	0.14	0.07	0.12	0.12
Sat Flow, veh/h	1774	3479	130	0	3231	420	1774	1863	1583	1774	1863	1583
Grp Volume(v), veh/h	221	626	651	0	741	757	215	87	8	99	33	204
Grp Sat Flow(s),veh/h/ln	1774	1770	1840	0	1770	1789	1774	1863	1583	1774	1863	1583
Q Serve(g_s), s	8.7	31.1	31.2	0.0	53.1	54.2	4.0	7.5	0.8	9.9	2.8	16.6
Cycle Q Clear(g_c), s	8.7	31.1	31.2	0.0	53.1	54.2	4.0	7.5	0.8	9.9	2.8	16.6
Prop In Lane	1.00		0.07	0.00		0.24	1.00		1.00	1.00		1.00
Lane Grp Cap(c), veh/h	248	1210	1258	0	1044	1055	318	269	229	117	228	290
V/C Ratio(X)	0.89	0.52	0.52	0.00	0.71	0.72	0.68	0.32	0.03	0.84	0.14	0.70
Avail Cap(c_a), veh/h	387	1210	1258	0	1044	1055	393	269	229	177	228	290
HCM Platoon Ratio	1.00	1.00	1.00	1.00	1.00	1.00	1.00	1.00	1.00	1.00	1.00	1.00
Upstream Filter(I)	1.00	1.00	1.00	0.00	1.00	1.00	1.00	1.00	1.00	1.00	1.00	1.00
Uniform Delay (d), s/veh	32.4	13.9	13.9	0.0	26.0	26.3	69.7	69.1	66.2	83.1	70.6	41.7
Incr Delay (d2), s/veh	10.2	1.6	1.5	0.0	4.1	4.2	3.4	3.2	0.3	13.1	1.3	13.5
Initial Q Delay(d3),s/veh	0.0	0.0	0.0	0.0	0.0	0.0	0.0	0.0	0.0	0.0	0.0	0.0
%ile BackOfQ(50%),veh/ln	7.3	15.7	16.3	0.0	27.1	27.9	10.3	4.1	0.4	5.3	1.6	8.3
LnGrp Delay(d),s/veh	42.6	15.5	15.4	0.0	30.1	30.5	73.1	72.3	66.5	96.2	71.9	55.1
LnGrp LOS	D	B	B		C	C	E	E	E	F	E	E
Approach Vol, veh/h		1498			1498			310			336	
Approach Delay, s/veh		19.5			30.3			72.7			68.9	
Approach LOS		B			C			E			E	

Timer	1	2	3	4	5	6	7	8
Assigned Phs	1	2	3	4		6	7	8
Phs Duration (G+Y+Rc), s	16.9	112.2	17.9	33.0		129.1	21.9	29.0
Change Period (Y+Rc), s	6.0	6.0	6.0	7.0		6.0	6.0	* 7
Max Green Setting (Gmax), s	25.0	86.0	18.0	26.0		117.0	23.5	* 22
Max Q Clear Time (g_c+I1), s	10.7	56.2	11.9	9.5		33.2	6.0	18.6
Green Ext Time (p_c), s	0.2	3.5	0.1	0.3		2.7	0.5	0.2

Intersection Summary	
HCM 2010 Ctrl Delay	33.0
HCM 2010 LOS	C

Notes

* HCM 2010 computational engine requires equal clearance times for the phases crossing the barrier.

Intersection	
Int Delay, s/veh	2.4

Movement	EBL	EBT	EBR	WBL	WBT	WBR	NBL	NBT	NBR	SBL	SBT	SBR
Lane Configurations												
Traffic Vol, veh/h	18	1053	209	65	1324	29	0	0	192	0	0	70
Future Vol, veh/h	18	1053	209	65	1324	29	0	0	192	0	0	70
Conflicting Peds, #/hr	0	0	0	0	0	0	0	0	0	0	0	0
Sign Control	Free	Free	Free	Free	Free	Free	Stop	Stop	Stop	Stop	Stop	Stop
RT Channelized	-	-	None	-	-	None	-	-	None	-	-	None
Storage Length	-	-	-	300	-	-	-	-	0	-	-	0
Veh in Median Storage, #	-	0	-	-	0	-	-	0	-	-	0	-
Grade, %	-	0	-	-	0	-	-	0	-	-	0	-
Peak Hour Factor	92	92	92	92	92	92	92	92	92	92	92	92
Heavy Vehicles, %	2	2	2	2	2	2	2	2	2	2	2	2
Mvmt Flow	20	1145	227	71	1439	32	0	0	209	0	0	76

Major/Minor	Major1			Major2			Minor1			Minor2		
Conflicting Flow All	1471	0	0	1372	0	0	-	-	686	-	-	736
Stage 1	-	-	-	-	-	-	-	-	-	-	-	-
Stage 2	-	-	-	-	-	-	-	-	-	-	-	-
Critical Hdwy	4.14	-	-	4.14	-	-	-	-	6.94	-	-	6.94
Critical Hdwy Stg 1	-	-	-	-	-	-	-	-	-	-	-	-
Critical Hdwy Stg 2	-	-	-	-	-	-	-	-	-	-	-	-
Follow-up Hdwy	2.22	-	-	2.22	-	-	-	-	3.32	-	-	3.32
Pot Cap-1 Maneuver	454	-	-	496	-	-	0	0	390	0	0	361
Stage 1	-	-	-	-	-	-	0	0	-	0	0	-
Stage 2	-	-	-	-	-	-	0	0	-	0	0	-
Platoon blocked, %		-	-		-	-						
Mov Cap-1 Maneuver	454	-	-	496	-	-	-	-	390	-	-	361
Mov Cap-2 Maneuver	-	-	-	-	-	-	-	-	-	-	-	-
Stage 1	-	-	-	-	-	-	-	-	-	-	-	-
Stage 2	-	-	-	-	-	-	-	-	-	-	-	-

Approach	EB	WB	NB	SB
HCM Control Delay, s	0.2	0.6	24.4	17.6
HCM LOS			C	C

Minor Lane/Major Mvmt	NBLn1	EBL	EBT	EBR	WBL	WBT	WBR	SBLn1
Capacity (veh/h)	390	454	-	-	496	-	-	361
HCM Lane V/C Ratio	0.535	0.043	-	-	0.142	-	-	0.211
HCM Control Delay (s)	24.4	13.3	-	-	13.5	-	-	17.6
HCM Lane LOS	C	B	-	-	B	-	-	C
HCM 95th %tile Q(veh)	3	0.1	-	-	0.5	-	-	0.8

Intersection	
Int Delay, s/veh	48.9

Movement	EBT	EBR	WBL	WBT	NBL	NBR
Lane Configurations						
Traffic Vol, veh/h	1131	114	78	1317	101	124
Future Vol, veh/h	1131	114	78	1317	101	124
Conflicting Peds, #/hr	0	0	0	0	0	0
Sign Control	Free	Free	Free	Free	Stop	Stop
RT Channelized	-	None	-	None	-	None
Storage Length	-	-	200	-	0	0
Veh in Median Storage, #	0	-	-	0	0	-
Grade, %	0	-	-	0	0	-
Peak Hour Factor	92	92	92	92	92	92
Heavy Vehicles, %	2	2	2	2	2	2
Mvmt Flow	1229	124	85	1432	110	135

Major/Minor	Major1		Major2		Minor1	
Conflicting Flow All	0	0	1353	0	2177	677
Stage 1	-	-	-	-	1291	-
Stage 2	-	-	-	-	886	-
Critical Hdwy	-	-	4.14	-	6.84	6.94
Critical Hdwy Stg 1	-	-	-	-	5.84	-
Critical Hdwy Stg 2	-	-	-	-	5.84	-
Follow-up Hdwy	-	-	2.22	-	3.52	3.32
Pot Cap-1 Maneuver	-	-	504	-	~ 39	395
Stage 1	-	-	-	-	222	-
Stage 2	-	-	-	-	363	-
Platoon blocked, %	-	-		-		
Mov Cap-1 Maneuver	-	-	504	-	~ 32	395
Mov Cap-2 Maneuver	-	-	-	-	~ 32	-
Stage 1	-	-	-	-	222	-
Stage 2	-	-	-	-	302	-

Approach	EB	WB	NB
HCM Control Delay, s	0	0.8	$ 617.3
HCM LOS			F

Minor Lane/Major Mvmt	NBLn1	NBLn2	EBT	EBR	WBL	WBT
Capacity (veh/h)	32	395	-	-	504	-
HCM Lane V/C Ratio	3.431	0.341	-	-	0.168	-
HCM Control Delay (s)	$ 1352	18.8	-	-	13.6	-
HCM Lane LOS	F	C	-	-	B	-
HCM 95th %tile Q(veh)	12.9	1.5	-	-	0.6	-

Notes			
~: Volume exceeds capacity	$: Delay exceeds 300s	+: Computation Not Defined	*: All major volume in platoon

Movement	EBL	EBT	EBR	WBL	WBT	WBR	NBL	NBT	NBR	SBL	SBT	SBR
Lane Configurations												
Traffic Volume (veh/h)	429	618	208	277	569	392	571	1643	340	356	1101	255
Future Volume (veh/h)	429	618	208	277	569	392	571	1643	340	356	1101	255
Number	3	8	18	7	4	14	1	6	16	5	2	12
Initial Q (Qb), veh	0	0	0	0	0	0	0	0	0	0	0	0
Ped-Bike Adj(A_pbT)	1.00		1.00	1.00		1.00	1.00		1.00	1.00		1.00
Parking Bus, Adj	1.00	1.00	1.00	1.00	1.00	1.00	1.00	1.00	1.00	1.00	1.00	1.00
Adj Sat Flow, veh/h/ln	1863	1863	1863	1863	1863	1863	1863	1863	1900	1863	1863	1900
Adj Flow Rate, veh/h	461	665	224	289	593	408	614	1767	366	383	1184	274
Adj No. of Lanes	2	3	1	2	3	1	2	3	0	2	3	0
Peak Hour Factor	0.93	0.93	0.93	0.96	0.96	0.96	0.93	0.93	0.93	0.93	0.93	0.93
Percent Heavy Veh, %	2	2	2	2	2	2	2	2	2	2	2	2
Cap, veh/h	495	770	541	473	737	422	655	2030	415	419	1696	393
Arrive On Green	0.14	0.15	0.15	0.14	0.14	0.14	0.19	0.48	0.48	0.12	0.41	0.41
Sat Flow, veh/h	3442	5085	1583	3442	5085	1583	3442	4235	865	3442	4129	955
Grp Volume(v), veh/h	461	665	224	289	593	408	614	1409	724	383	972	486
Grp Sat Flow(s),veh/h/ln	1721	1695	1583	1721	1695	1583	1721	1695	1710	1721	1695	1694
Q Serve(g_s), s	26.5	25.5	14.5	15.8	22.6	29.0	35.2	74.1	76.4	22.0	47.4	47.4
Cycle Q Clear(g_c), s	26.5	25.5	14.5	15.8	22.6	29.0	35.2	74.1	76.4	22.0	47.4	47.4
Prop In Lane	1.00		1.00	1.00		1.00	1.00		0.51	1.00		0.56
Lane Grp Cap(c), veh/h	495	770	541	473	737	422	655	1625	820	419	1393	696
V/C Ratio(X)	0.93	0.86	0.41	0.61	0.80	0.97	0.94	0.87	0.88	0.91	0.70	0.70
Avail Cap(c_a), veh/h	533	915	586	473	737	422	792	1625	820	499	1393	696
HCM Platoon Ratio	1.00	1.00	1.00	1.00	1.00	1.00	1.00	1.00	1.00	1.00	1.00	1.00
Upstream Filter(I)	1.00	1.00	1.00	1.00	1.00	1.00	1.00	1.00	1.00	1.00	1.00	1.00
Uniform Delay (d), s/veh	84.6	82.8	25.7	81.2	82.8	43.0	79.8	46.4	47.0	86.8	48.7	48.7
Incr Delay (d2), s/veh	21.7	7.1	0.4	1.7	6.3	34.8	15.6	6.5	13.2	17.8	2.9	5.7
Initial Q Delay(d3),s/veh	0.0	0.0	0.0	0.0	0.0	0.0	0.0	0.0	0.0	0.0	0.0	0.0
%ile BackOfQ(50%),veh/ln	14.1	12.5	6.4	7.7	11.0	24.7	18.1	36.1	39.0	11.5	22.7	23.2
LnGrp Delay(d),s/veh	106.3	90.0	26.1	82.9	89.0	77.8	95.4	52.9	60.2	104.6	51.6	54.4
LnGrp LOS	F	F	C	F	F	E	F	D	E	F	D	D
Approach Vol, veh/h		1350			1290			2747			1841	
Approach Delay, s/veh		85.0			84.1			64.3			63.4	
Approach LOS		F			F			E			E	

Timer	1	2	3	4	5	6	7	8
Assigned Phs	1	2	3	4	5	6	7	8
Phs Duration (G+Y+Rc), s	43.1	88.2	33.8	35.0	29.4	101.9	32.5	36.3
Change Period (Y+Rc), s	5.0	6.0	5.0	6.0	5.0	6.0	5.0	6.0
Max Green Setting (Gmax), s	46.0	72.0	31.0	29.0	29.0	89.0	24.0	36.0
Max Q Clear Time (g_c+I1), s	37.2	49.4	28.5	31.0	24.0	78.4	17.8	27.5
Green Ext Time (p_c), s	0.9	3.4	0.3	0.0	0.4	4.5	0.3	2.8

Intersection Summary	
HCM 2010 Ctrl Delay	71.5
HCM 2010 LOS	E

No Build 2040

Movement	EBL	EBT	EBR	WBL	WBT	WBR	NBL	NBT	NBR	SBL	SBT	SBR
Lane Configurations												
Traffic Volume (veh/h)	326	871	452	215	2091	76	828	373	216	108	351	921
Future Volume (veh/h)	326	871	452	215	2091	76	828	373	216	108	351	921
Number	1	6	16	5	2	12	7	4	14	3	8	18
Initial Q (Qb), veh	0	0	0	0	0	0	0	0	0	0	0	0
Ped-Bike Adj(A_pbT)	1.00		1.00	1.00		1.00	1.00		1.00	1.00		1.00
Parking Bus, Adj	1.00	1.00	1.00	1.00	1.00	1.00	1.00	1.00	1.00	1.00	1.00	1.00
Adj Sat Flow, veh/h/ln	1863	1863	1863	1863	1863	1900	1863	1863	1900	1863	1863	1900
Adj Flow Rate, veh/h	354	947	491	226	2201	80	890	401	232	117	382	1001
Adj No. of Lanes	2	2	1	1	3	0	1	2	0	1	2	0
Peak Hour Factor	0.92	0.92	0.92	0.95	0.95	0.95	0.93	0.93	0.93	0.92	0.92	0.92
Percent Heavy Veh, %	2	2	2	2	2	2	2	2	2	2	2	2
Cap, veh/h	268	924	827	237	1483	54	503	915	523	325	393	352
Arrive On Green	0.08	0.26	0.26	0.11	0.29	0.29	0.26	0.42	0.42	0.06	0.22	0.22
Sat Flow, veh/h	3442	3539	1583	1774	5038	182	1774	2172	1242	1774	1770	1583
Grp Volume(v), veh/h	354	947	491	226	1478	803	890	326	307	117	382	1001
Grp Sat Flow(s),veh/h/ln	1721	1770	1583	1774	1695	1831	1774	1770	1644	1774	1770	1583
Q Serve(g_s), s	14.0	47.0	38.7	19.1	53.0	53.0	47.0	23.5	23.9	9.1	38.5	40.0
Cycle Q Clear(g_c), s	14.0	47.0	38.7	19.1	53.0	53.0	47.0	23.5	23.9	9.1	38.5	40.0
Prop In Lane	1.00		1.00	1.00		0.10	1.00		0.76	1.00		1.00
Lane Grp Cap(c), veh/h	268	924	827	237	998	539	503	746	693	325	393	352
V/C Ratio(X)	1.32	1.02	0.59	0.95	1.48	1.49	1.77	0.44	0.44	0.36	0.97	2.84
Avail Cap(c_a), veh/h	268	924	827	237	998	539	503	746	693	354	393	352
HCM Platoon Ratio	1.00	1.00	1.00	1.00	1.00	1.00	1.00	1.00	1.00	1.00	1.00	1.00
Upstream Filter(I)	1.00	1.00	1.00	1.00	1.00	1.00	1.00	1.00	1.00	1.00	1.00	1.00
Uniform Delay (d), s/veh	83.0	66.5	29.8	57.0	63.5	63.5	57.4	36.9	37.0	49.4	69.4	70.0
Incr Delay (d2), s/veh	168.8	36.1	3.1	45.0	221.9	229.9	353.9	1.9	2.1	0.2	38.8	838.0
Initial Q Delay(d3),s/veh	0.0	0.0	0.0	0.0	0.0	0.0	0.0	0.0	0.0	0.0	0.0	0.0
%ile BackOfQ(50%),veh/ln	12.9	27.6	17.6	12.3	55.6	61.2	74.5	11.9	11.2	4.4	23.1	99.4
LnGrp Delay(d),s/veh	251.8	102.6	32.9	102.0	285.4	293.4	411.3	38.8	39.1	49.6	108.2	908.0
LnGrp LOS	F	F	C	F	F	F	F	D	D	D	F	F
Approach Vol, veh/h		1792			2507			1523			1500	
Approach Delay, s/veh		113.0			271.4			256.5			637.4	
Approach LOS		F			F			F			F	

Timer	1	2	3	4	5	6	7	8
Assigned Phs	1	2	3	4	5	6	7	8
Phs Duration (G+Y+Rc), s	20.0	59.0	18.1	82.9	26.0	53.0	54.0	47.0
Change Period (Y+Rc), s	6.0	6.0	7.0	7.0	6.0	6.0	7.0	7.0
Max Green Setting (Gmax), s	14.0	53.0	14.0	73.0	20.0	47.0	47.0	40.0
Max Q Clear Time (g_c+I1), s	16.0	55.0	11.1	25.9	21.1	49.0	49.0	42.0
Green Ext Time (p_c), s	0.0	0.0	0.0	3.7	0.0	0.0	0.0	0.0

Intersection Summary	
HCM 2010 Ctrl Delay	304.5
HCM 2010 LOS	F

Intersection	
Int Delay, s/veh	7

Movement	EBL	EBT	WBT	WBR	SBL	SBR
Lane Configurations		↑↑	↑↑↱			↱
Traffic Vol, veh/h	0	1195	2233	20	0	149
Future Vol, veh/h	0	1195	2233	20	0	149
Conflicting Peds, #/hr	0	0	0	0	0	0
Sign Control	Free	Free	Free	Free	Stop	Stop
RT Channelized	-	None	-	None	-	None
Storage Length	-	-	-	50	-	0
Veh in Median Storage, #	-	0	0	-	0	-
Grade, %	-	0	0	-	0	-
Peak Hour Factor	92	92	92	92	92	92
Heavy Vehicles, %	2	2	2	2	2	2
Mvmt Flow	0	1299	2427	22	0	162

Major/Minor	Major1		Major2		Minor2	
Conflicting Flow All	-	0	-	0	-	1225
Stage 1	-	-	-	-	-	-
Stage 2	-	-	-	-	-	-
Critical Hdwy	-	-	-	-	-	7.14
Critical Hdwy Stg 1	-	-	-	-	-	-
Critical Hdwy Stg 2	-	-	-	-	-	-
Follow-up Hdwy	-	-	-	-	-	3.92
Pot Cap-1 Maneuver	0	-	-	-	0	~ 146
Stage 1	0	-	-	-	0	-
Stage 2	0	-	-	-	0	-
Platoon blocked, %		-	-	-		
Mov Cap-1 Maneuver	-	-	-	-	-	~ 146
Mov Cap-2 Maneuver	-	-	-	-	-	-
Stage 1	-	-	-	-	-	-
Stage 2	-	-	-	-	-	-

Approach	EB	WB	SB
HCM Control Delay, s	0	0	167.9
HCM LOS			F

Minor Lane/Major Mvmt	EBT	WBT	WBR	SBLn1
Capacity (veh/h)	-	-	-	146
HCM Lane V/C Ratio	-	-	-	1.109
HCM Control Delay (s)	-	-	-	167.9
HCM Lane LOS	-	-	-	F
HCM 95th %tile Q(veh)	-	-	-	8.9

Notes			
~: Volume exceeds capacity	$: Delay exceeds 300s	+: Computation Not Defined	*: All major volume in platoon

Intersection	
Int Delay, s/veh	81.1

Movement	EBT	EBR	WBL	WBT	NBL	NBR
Lane Configurations						
Traffic Vol, veh/h	1195	0	0	2129	124	61
Future Vol, veh/h	1195	0	0	2129	124	61
Conflicting Peds, #/hr	0	0	0	0	0	0
Sign Control	Free	Free	Free	Free	Stop	Stop
RT Channelized	-	None	-	None	-	None
Storage Length	-	-	-	-	0	50
Veh in Median Storage, #	0	-	-	0	0	-
Grade, %	0	-	-	0	0	-
Peak Hour Factor	92	92	92	92	92	92
Heavy Vehicles, %	2	2	2	2	2	2
Mvmt Flow	1299	0	0	2314	135	66

Major/Minor	Major1		Major2		Minor1	
Conflicting Flow All	0	-	-	-	2456	650
Stage 1	-	-	-	-	1299	-
Stage 2	-	-	-	-	1157	-
Critical Hdwy	-	-	-	-	6.84	6.94
Critical Hdwy Stg 1	-	-	-	-	5.84	-
Critical Hdwy Stg 2	-	-	-	-	5.84	-
Follow-up Hdwy	-	-	-	-	3.52	3.32
Pot Cap-1 Maneuver	-	0	0	-	~ 25	412
Stage 1	-	0	0	-	220	-
Stage 2	-	0	0	-	261	-
Platoon blocked, %	-			-		
Mov Cap-1 Maneuver	-	-	-	-	~ 25	412
Mov Cap-2 Maneuver	-	-	-	-	~ 25	-
Stage 1	-	-	-	-	220	-
Stage 2	-	-	-	-	261	-

Approach	EB	WB	NB
HCM Control Delay, s	0	0	$ 1538.9
HCM LOS			F

Minor Lane/Major Mvmt	NBLn1	NBLn2	EBT	WBT
Capacity (veh/h)	25	412	-	-
HCM Lane V/C Ratio	5.391	0.161	-	-
HCM Control Delay (s)	$ 2288.4	15.4	-	-
HCM Lane LOS	F	C	-	-
HCM 95th %tile Q(veh)	16.7	0.6	-	-

Notes			
~: Volume exceeds capacity	$: Delay exceeds 300s	+: Computation Not Defined	*: All major volume in platoon

Intersection	
Int Delay, s/veh	0.1

Movement	EBL	EBT	WBT	WBR	SBL	SBR
Lane Configurations						
Traffic Vol, veh/h	0	1256	2112	2	0	15
Future Vol, veh/h	0	1256	2112	2	0	15
Conflicting Peds, #/hr	0	0	0	0	0	0
Sign Control	Free	Free	Free	Free	Stop	Stop
RT Channelized	-	None	-	None	-	None
Storage Length	-	-	-	-	-	0
Veh in Median Storage, #	-	0	0	-	0	-
Grade, %	-	0	0	-	0	-
Peak Hour Factor	92	92	92	92	92	92
Heavy Vehicles, %	2	2	2	2	2	2
Mvmt Flow	0	1365	2296	2	0	16

Major/Minor	Major1		Major2		Minor2	
Conflicting Flow All	-	0	-	0	-	1149
Stage 1	-	-	-	-	-	-
Stage 2	-	-	-	-	-	-
Critical Hdwy	-	-	-	-	-	6.94
Critical Hdwy Stg 1	-	-	-	-	-	-
Critical Hdwy Stg 2	-	-	-	-	-	-
Follow-up Hdwy	-	-	-	-	-	3.32
Pot Cap-1 Maneuver	0	-	-	-	0	192
Stage 1	0	-	-	-	0	-
Stage 2	0	-	-	-	0	-
Platoon blocked, %		-	-	-		
Mov Cap-1 Maneuver	-	-	-	-	-	192
Mov Cap-2 Maneuver	-	-	-	-	-	-
Stage 1	-	-	-	-	-	-
Stage 2	-	-	-	-	-	-

Approach	EB	WB	SB
HCM Control Delay, s	0	0	25.5
HCM LOS			D

Minor Lane/Major Mvmt	EBT	WBT	WBR	SBLn1
Capacity (veh/h)	-	-	-	192
HCM Lane V/C Ratio	-	-	-	0.085
HCM Control Delay (s)	-	-	-	25.5
HCM Lane LOS	-	-	-	D
HCM 95th %tile Q(veh)	-	-	-	0.3

Movement	EBL	EBT	EBR	WBL	WBT	WBR	NBL	NBT	NBR	SBL	SBT	SBR
Lane Configurations												
Traffic Volume (veh/h)	130	980	146	266	1547	143	363	119	165	141	296	204
Future Volume (veh/h)	130	980	146	266	1547	143	363	119	165	141	296	204
Number	1	6	16	5	2	12	7	4	14	3	8	18
Initial Q (Qb), veh	0	0	0	0	0	0	0	0	0	0	0	0
Ped-Bike Adj(A_pbT)	1.00		1.00	1.00		1.00	1.00		1.00	1.00		1.00
Parking Bus, Adj	1.00	1.00	1.00	1.00	1.00	1.00	1.00	1.00	1.00	1.00	1.00	1.00
Adj Sat Flow, veh/h/ln	1863	1863	1900	1863	1863	1900	1863	1863	1863	1863	1863	1863
Adj Flow Rate, veh/h	146	1101	164	296	1719	159	454	149	206	170	357	246
Adj No. of Lanes	1	2	0	1	2	0	1	1	1	1	1	1
Peak Hour Factor	0.89	0.89	0.89	0.90	0.90	0.90	0.80	0.80	0.80	0.83	0.83	0.83
Percent Heavy Veh, %	2	2	2	2	2	2	2	2	2	2	2	2
Cap, veh/h	119	1216	181	355	1735	158	379	546	464	343	323	274
Arrive On Green	0.04	0.39	0.39	0.32	1.00	1.00	0.19	0.29	0.29	0.07	0.17	0.17
Sat Flow, veh/h	1774	3092	460	1774	3280	299	1774	1863	1583	1774	1863	1583
Grp Volume(v), veh/h	146	629	636	296	917	961	454	149	206	170	357	246
Grp Sat Flow(s),veh/h/ln	1774	1770	1782	1774	1770	1810	1774	1863	1583	1774	1863	1583
Q Serve(g_s), s	6.0	50.2	50.5	16.9	0.0	75.3	28.0	9.2	11.5	10.0	26.0	22.8
Cycle Q Clear(g_c), s	6.0	50.2	50.5	16.9	0.0	75.3	28.0	9.2	11.5	10.0	26.0	22.8
Prop In Lane	1.00		0.26	1.00		0.17	1.00		1.00	1.00		1.00
Lane Grp Cap(c), veh/h	119	696	701	355	936	957	379	546	464	343	323	274
V/C Ratio(X)	1.23	0.90	0.91	0.83	0.98	1.00	1.20	0.27	0.44	0.50	1.11	0.90
Avail Cap(c_a), veh/h	119	696	701	355	936	957	379	546	464	343	323	274
HCM Platoon Ratio	1.00	1.00	1.00	2.00	2.00	2.00	1.00	1.00	1.00	1.00	1.00	1.00
Upstream Filter(I)	1.00	1.00	1.00	0.09	0.09	0.09	1.00	1.00	1.00	1.00	1.00	1.00
Uniform Delay (d), s/veh	42.2	42.8	42.9	46.1	0.0	0.0	47.3	40.7	22.7	48.0	62.0	60.7
Incr Delay (d2), s/veh	155.9	17.3	17.7	1.6	5.3	9.8	111.7	0.2	0.5	0.4	81.6	28.9
Initial Q Delay(d3),s/veh	0.0	0.0	0.0	0.0	0.0	0.0	0.0	0.0	0.0	0.0	0.0	0.0
%ile BackOfQ(50%),veh/ln	8.3	27.8	28.2	11.2	1.4	2.6	27.5	4.8	6.1	5.8	20.7	12.2
LnGrp Delay(d),s/veh	198.1	60.2	60.6	47.6	5.3	9.8	159.1	40.9	23.2	48.4	143.6	89.6
LnGrp LOS	F	E	E	D	A	F	F	D	C	D	F	F
Approach Vol, veh/h		1411			2174			809			773	
Approach Delay, s/veh		74.6			13.0			102.7			105.5	
Approach LOS		E			B			F			F	

Timer	1	2	3	4	5	6	7	8
Assigned Phs	1	2	3	4	5	6	7	8
Phs Duration (G+Y+Rc), s	9.0	84.3	13.0	49.0	29.3	64.0	31.0	31.0
Change Period (Y+Rc), s	3.0	5.0	3.0	5.0	5.0	* 5	3.0	5.0
Max Green Setting (Gmax), s	6.0	74.0	10.0	44.0	21.0	* 59	28.0	26.0
Max Q Clear Time (g_c+I1), s	8.0	77.3	12.0	13.5	18.9	52.5	30.0	28.0
Green Ext Time (p_c), s	0.0	0.0	0.0	1.2	0.1	1.9	0.0	0.0

Intersection Summary	
HCM 2010 Ctrl Delay	57.7
HCM 2010 LOS	E

Notes

* HCM 2010 computational engine requires equal clearance times for the phases crossing the barrier.

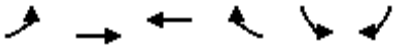

Movement	EBL	EBT	WBT	WBR	SBL	SBR
Lane Configurations						
Traffic Volume (veh/h)	147	1095	1740	548	552	248
Future Volume (veh/h)	147	1095	1740	548	552	248
Number	1	6	2	12	3	18
Initial Q (Qb), veh	0	0	0	0	0	0
Ped-Bike Adj(A_pbT)	1.00			1.00	1.00	1.00
Parking Bus, Adj	1.00	1.00	1.00	1.00	1.00	1.00
Adj Sat Flow, veh/h/ln	1863	1863	1863	1900	1863	1863
Adj Flow Rate, veh/h	169	1259	1955	616	575	258
Adj No. of Lanes	1	2	2	0	1	1
Peak Hour Factor	0.87	0.87	0.89	0.89	0.96	0.96
Percent Heavy Veh, %	2	2	2	2	2	2
Cap, veh/h	485	3066	1576	472	485	823
Arrive On Green	0.49	1.00	0.59	0.59	0.27	0.27
Sat Flow, veh/h	1774	3632	2780	804	1774	1583
Grp Volume(v), veh/h	169	1259	1253	1318	575	258
Grp Sat Flow(s),veh/h/ln	1774	1770	1770	1721	1774	1583
Q Serve(g_s), s	3.9	0.0	88.0	88.0	41.0	0.0
Cycle Q Clear(g_c), s	3.9	0.0	88.0	88.0	41.0	0.0
Prop In Lane	1.00			0.47	1.00	1.00
Lane Grp Cap(c), veh/h	485	3066	1038	1010	485	823
V/C Ratio(X)	0.35	0.41	1.21	1.31	1.19	0.31
Avail Cap(c_a), veh/h	485	3066	1038	1010	485	823
HCM Platoon Ratio	2.00	2.00	1.00	1.00	1.00	1.00
Upstream Filter(I)	0.48	0.48	1.00	1.00	1.00	1.00
Uniform Delay (d), s/veh	29.1	0.0	31.0	31.0	54.5	20.7
Incr Delay (d2), s/veh	0.2	0.2	102.1	144.9	102.9	0.2
Initial Q Delay(d3),s/veh	0.0	0.0	0.0	0.0	0.0	0.0
%ile BackOfQ(50%),veh/ln	3.9	0.1	72.1	82.1	33.9	6.1
LnGrp Delay(d),s/veh	29.3	0.2	133.1	175.9	157.4	20.8
LnGrp LOS	C	A	F	F	F	C
Approach Vol, veh/h		1428	2571		833	
Approach Delay, s/veh		3.6	155.1		115.1	
Approach LOS		A	F		F	

Timer	1	2	3	4	5	6	7	8
Assigned Phs	1	2				6		8
Phs Duration (G+Y+Rc), s	41.9	93.0				134.9		46.0
Change Period (Y+Rc), s	5.0	* 5				5.0		5.0
Max Green Setting (Gmax), s	8.0	* 88				99.0		41.0
Max Q Clear Time (g_c+I1), s	5.9	90.0				2.0		43.0
Green Ext Time (p_c), s	0.1	0.0				3.5		0.0

Intersection Summary	
HCM 2010 Ctrl Delay	103.4
HCM 2010 LOS	F

Notes

* HCM 2010 computational engine requires equal clearance times for the phases crossing the barrier.

Intersection	
Int Delay, s/veh	40.7

Movement	EBL	EBT	WBT	WBR	SBL	SBR
Lane Configurations						
Traffic Vol, veh/h	41	1606	2136	7	11	152
Future Vol, veh/h	41	1606	2136	7	11	152
Conflicting Peds, #/hr	0	0	0	0	0	0
Sign Control	Free	Free	Free	Free	Stop	Stop
RT Channelized	-	None	-	None	-	None
Storage Length	100	-	-	-	0	-
Veh in Median Storage, #	-	0	0	-	0	-
Grade, %	-	0	0	-	0	-
Peak Hour Factor	92	92	92	92	92	92
Heavy Vehicles, %	2	2	2	2	2	2
Mvmt Flow	45	1746	2322	8	12	165

Major/Minor	Major1		Major2		Minor2	
Conflicting Flow All	2330	0	-	0	3289	1165
Stage 1	-	-	-	-	2326	-
Stage 2	-	-	-	-	963	-
Critical Hdwy	4.14	-	-	-	6.84	6.94
Critical Hdwy Stg 1	-	-	-	-	5.84	-
Critical Hdwy Stg 2	-	-	-	-	5.84	-
Follow-up Hdwy	2.22	-	-	-	3.52	3.32
Pot Cap-1 Maneuver	210	-	-	-	~ 7	187
Stage 1	-	-	-	-	60	-
Stage 2	-	-	-	-	331	-
Platoon blocked, %		-	-	-		
Mov Cap-1 Maneuver	210	-	-	-	~ 6	187
Mov Cap-2 Maneuver	-	-	-	-	~ 6	-
Stage 1	-	-	-	-	47	-
Stage 2	-	-	-	-	331	-

Approach	EB	WB	SB
HCM Control Delay, s	0.7	0	$ 980.4
HCM LOS			F

Minor Lane/Major Mvmt	EBL	EBT	WBT	WBR	SBLn1
Capacity (veh/h)	210	-	-	-	62
HCM Lane V/C Ratio	0.212	-	-	-	2.858
HCM Control Delay (s)	26.7	-	-	-	-$ 980.4
HCM Lane LOS	D	-	-	-	F
HCM 95th %tile Q(veh)	0.8	-	-	-	18.1

Notes			
~: Volume exceeds capacity	$: Delay exceeds 300s	+: Computation Not Defined	*: All major volume in platoon

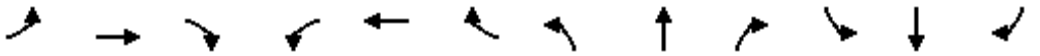

Movement	EBL	EBT	EBR	WBL	WBT	WBR	NBL	NBT	NBR	SBL	SBT	SBR
Lane Configurations												
Traffic Volume (vph)	118	1454	45	11	1772	28	171	6	28	153	28	202
Future Volume (vph)	118	1454	45	11	1772	28	171	6	28	153	28	202
Ideal Flow (vphpl)	1900	1900	1900	1900	1900	1900	1900	1900	1900	1900	1900	1900
Total Lost time (s)	6.0	6.0		6.0	6.0			7.0	7.0		7.0	7.0
Lane Util. Factor	1.00	0.95		1.00	0.95			1.00	1.00		1.00	1.00
Frt	1.00	1.00		1.00	1.00			1.00	0.85		1.00	0.85
Flt Protected	0.95	1.00		0.95	1.00			0.95	1.00		0.96	1.00
Satd. Flow (prot)	1770	3523		1770	3531			1777	1583		1787	1583
Flt Permitted	0.05	1.00		0.05	1.00			0.95	1.00		0.96	1.00
Satd. Flow (perm)	85	3523		85	3531			1777	1583		1787	1583
Peak-hour factor, PHF	0.88	0.88	0.88	0.95	0.95	0.95	0.77	0.77	0.77	0.55	0.55	0.55
Adj. Flow (vph)	134	1652	51	12	1865	29	222	8	36	278	51	367
RTOR Reduction (vph)	0	1	0	0	1	0	0	0	31	0	0	109
Lane Group Flow (vph)	134	1702	0	12	1894	0	0	230	5	0	329	258
Turn Type	pm+pt	NA		pm+pt	NA		Split	NA	Perm	Split	NA	Perm
Protected Phases	1	6		5	2		4	4		3	3	
Permitted Phases	6			2					4			3
Actuated Green, G (s)	97.0	97.0		90.0	90.0			23.0	23.0		32.0	32.0
Effective Green, g (s)	97.0	97.0		90.0	90.0			23.0	23.0		32.0	32.0
Actuated g/C Ratio	0.54	0.54		0.50	0.50			0.13	0.13		0.18	0.18
Clearance Time (s)	6.0	6.0		6.0	6.0			7.0	7.0		7.0	7.0
Vehicle Extension (s)	3.0	1.0		3.0	1.0			2.5	2.5		2.5	2.5
Lane Grp Cap (vph)	130	1898		61	1765			227	202		317	281
v/s Ratio Prot	0.05	c0.48		0.00	c0.54			c0.13			c0.18	
v/s Ratio Perm	0.51			0.10					0.00			0.16
v/c Ratio	1.03	0.90		0.20	1.07			1.01	0.02		1.04	0.92
Uniform Delay, d1	57.0	37.0		66.5	45.0			78.5	68.7		74.0	72.7
Progression Factor	1.00	1.00		1.00	1.00			1.00	1.00		1.00	1.00
Incremental Delay, d2	87.4	7.1		1.6	44.0			63.2	0.0		60.7	32.4
Delay (s)	144.4	44.1		68.0	89.0			141.7	68.7		134.7	105.1
Level of Service	F	D		E	F			F	E		F	F
Approach Delay (s)		51.5			88.8			131.8			119.1	
Approach LOS		D			F			F			F	

Intersection Summary			
HCM 2000 Control Delay	81.1	HCM 2000 Level of Service	F
HCM 2000 Volume to Capacity ratio	1.07		
Actuated Cycle Length (s)	180.0	Sum of lost time (s)	26.0
Intersection Capacity Utilization	88.9%	ICU Level of Service	E
Analysis Period (min)	15		

c Critical Lane Group

Movement	EBT	EBR	WBL	WBT	NBL	NBR
Lane Configurations						
Traffic Volume (veh/h)	1397	238	420	1619	192	261
Future Volume (veh/h)	1397	238	420	1619	192	261
Number	6	16	5	2	7	14
Initial Q (Qb), veh	0	0	0	0	0	0
Ped-Bike Adj(A_pbT)		1.00	1.00		1.00	1.00
Parking Bus, Adj	1.00	1.00	1.00	1.00	1.00	1.00
Adj Sat Flow, veh/h/ln	1863	1900	1863	1863	1863	1863
Adj Flow Rate, veh/h	1644	280	433	1669	218	297
Adj No. of Lanes	2	0	1	2	1	1
Peak Hour Factor	0.85	0.85	0.97	0.97	0.88	0.88
Percent Heavy Veh, %	2	2	2	2	2	2
Cap, veh/h	1655	274	415	2729	288	584
Arrive On Green	0.54	0.54	0.27	1.00	0.16	0.16
Sat Flow, veh/h	3133	504	1774	3632	1774	1583
Grp Volume(v), veh/h	938	986	433	1669	218	297
Grp Sat Flow(s),veh/h/ln	1770	1774	1774	1770	1774	1583
Q Serve(g_s), s	77.2	81.7	31.0	0.0	17.6	21.9
Cycle Q Clear(g_c), s	77.2	81.7	31.0	0.0	17.6	21.9
Prop In Lane		0.28	1.00		1.00	1.00
Lane Grp Cap(c), veh/h	963	966	415	2729	288	584
V/C Ratio(X)	0.97	1.02	1.04	0.61	0.76	0.51
Avail Cap(c_a), veh/h	963	966	415	2729	319	612
HCM Platoon Ratio	1.00	1.00	1.33	1.33	1.00	1.00
Upstream Filter(I)	0.41	0.41	0.09	0.09	1.00	1.00
Uniform Delay (d), s/veh	33.1	34.2	48.5	0.0	60.0	36.8
Incr Delay (d2), s/veh	13.5	24.0	26.8	0.1	8.5	0.5
Initial Q Delay(d3),s/veh	0.0	0.0	0.0	0.0	0.0	0.0
%ile BackOfQ(50%),veh/ln	41.1	46.1	20.2	0.0	9.3	20.2
LnGrp Delay(d),s/veh	46.6	58.2	75.3	0.1	68.5	37.3
LnGrp LOS	D	F	F	A	E	D
Approach Vol, veh/h	1924			2102	515	
Approach Delay, s/veh	52.6			15.6	50.5	
Approach LOS	D			B	D	

Timer	1	2	3	4	5	6	7	8
Assigned Phs		2		4	5	6		
Phs Duration (G+Y+Rc), s		120.7		29.3	34.0	86.7		
Change Period (Y+Rc), s		5.0		5.0	3.0	5.0		
Max Green Setting (Gmax), s		113.0		27.0	31.0	79.0		
Max Q Clear Time (g_c+I1), s		2.0		23.9	33.0	83.7		
Green Ext Time (p_c), s		5.5		0.5	0.0	0.0		

Intersection Summary	
HCM 2010 Ctrl Delay	35.2
HCM 2010 LOS	D

Movement	EBL	EBT	EBR	WBL	WBT	WBR	NBL	NBT	NBR	SBL	SBT	SBR
Lane Configurations												
Traffic Volume (veh/h)	79	1495	163	437	1571	17	401	10	166	20	39	67
Future Volume (veh/h)	79	1495	163	437	1571	17	401	10	166	20	39	67
Number	1	6	16	5	2	12	7	4	14	3	8	18
Initial Q (Qb), veh	0	0	0	0	0	0	0	0	0	0	0	0
Ped-Bike Adj(A_pbT)	1.00		1.00	1.00		1.00	1.00		1.00	1.00		1.00
Parking Bus, Adj	1.00	1.00	1.00	1.00	1.00	1.00	1.00	1.00	1.00	1.00	1.00	1.00
Adj Sat Flow, veh/h/ln	1863	1863	1900	1863	1863	1900	1863	1863	1900	1900	1863	1900
Adj Flow Rate, veh/h	99	1869	204	451	1620	18	501	12	208	28	54	93
Adj No. of Lanes	1	2	0	1	2	0	1	1	0	0	1	0
Peak Hour Factor	0.80	0.80	0.80	0.97	0.97	0.97	0.80	0.80	0.80	0.72	0.72	0.72
Percent Heavy Veh, %	2	2	2	2	2	2	2	2	2	2	2	2
Cap, veh/h	161	1333	143	332	1895	21	363	28	493	83	161	244
Arrive On Green	0.03	0.28	0.28	0.11	0.35	0.35	0.33	0.33	0.33	0.33	0.33	0.33
Sat Flow, veh/h	1774	3226	346	1774	3586	40	1236	87	1509	168	492	748
Grp Volume(v), veh/h	99	1010	1063	451	799	839	501	0	220	175	0	0
Grp Sat Flow(s),veh/h/ln	1774	1770	1802	1774	1770	1856	1236	0	1596	1408	0	0
Q Serve(g_s), s	4.8	62.0	62.0	24.0	62.7	62.9	30.8	0.0	16.1	2.1	0.0	0.0
Cycle Q Clear(g_c), s	4.8	62.0	62.0	24.0	62.7	62.9	49.0	0.0	16.1	18.2	0.0	0.0
Prop In Lane	1.00		0.19	1.00		0.02	1.00		0.95	0.16		0.53
Lane Grp Cap(c), veh/h	161	731	745	332	935	981	363	0	521	488	0	0
V/C Ratio(X)	0.62	1.38	1.43	1.36	0.85	0.86	1.38	0.00	0.42	0.36	0.00	0.00
Avail Cap(c_a), veh/h	212	731	745	332	935	981	363	0	521	488	0	0
HCM Platoon Ratio	0.67	0.67	0.67	0.67	0.67	0.67	1.00	1.00	1.00	1.00	1.00	1.00
Upstream Filter(I)	0.16	0.16	0.16	1.00	1.00	1.00	1.00	0.00	1.00	1.00	0.00	0.00
Uniform Delay (d), s/veh	33.9	54.2	54.2	56.3	43.1	43.1	57.5	0.0	39.4	38.5	0.0	0.0
Incr Delay (d2), s/veh	0.2	172.7	193.6	180.0	9.8	9.5	186.8	0.0	0.4	0.3	0.0	0.0
Initial Q Delay(d3),s/veh	0.0	0.0	0.0	0.0	0.0	0.0	0.0	0.0	0.0	0.0	0.0	0.0
%ile BackOfQ(50%),veh/ln	2.3	65.4	70.9	30.4	33.3	34.9	33.9	0.0	7.1	5.8	0.0	0.0
LnGrp Delay(d),s/veh	34.1	227.0	247.9	236.3	52.9	52.6	244.3	0.0	39.8	38.8	0.0	0.0
LnGrp LOS	C	F	F	F	D	D	F		D	D		
Approach Vol, veh/h		2172			2089			721			175	
Approach Delay, s/veh		228.4			92.4			181.9			38.8	
Approach LOS		F			F			F			D	

Timer	1	2	3	4	5	6	7	8
Assigned Phs	1	2		4	5	6		8
Phs Duration (G+Y+Rc), s	9.7	85.3		55.0	27.0	68.0		55.0
Change Period (Y+Rc), s	3.0	6.0		6.0	3.0	6.0		6.0
Max Green Setting (Gmax), s	11.0	75.0		49.0	24.0	62.0		49.0
Max Q Clear Time (g_c+I1), s	6.8	64.9		51.0	26.0	64.0		20.2
Green Ext Time (p_c), s	0.0	3.1		0.0	0.0	0.0		0.9

Intersection Summary		
HCM 2010 Ctrl Delay	160.4	
HCM 2010 LOS	F	

Movement	EBL	EBT	EBR	WBL	WBT	WBR	NBL	NBT	NBR	SBL	SBT	SBR
Lane Configurations												
Traffic Volume (veh/h)	4	1561	116	199	1720	13	304	5	440	6	1	1
Future Volume (veh/h)	4	1561	116	199	1720	13	304	5	440	6	1	1
Number	1	6	16	5	2	12	7	4	14	3	8	18
Initial Q (Qb), veh	0	0	0	0	0	0	0	0	0	0	0	0
Ped-Bike Adj(A_pbT)	1.00		1.00	1.00		1.00	1.00		1.00	1.00		1.00
Parking Bus, Adj	1.00	1.00	1.00	1.00	1.00	1.00	1.00	1.00	1.00	1.00	1.00	1.00
Adj Sat Flow, veh/h/ln	1863	1863	1900	1863	1863	1900	1863	1863	1863	1900	1863	1900
Adj Flow Rate, veh/h	4	1734	129	201	1737	13	338	6	489	11	2	2
Adj No. of Lanes	1	2	0	1	2	0	1	1	1	0	1	0
Peak Hour Factor	0.90	0.90	0.90	0.99	0.99	0.99	0.90	0.90	0.90	0.55	0.55	0.55
Percent Heavy Veh, %	2	2	2	2	2	2	2	2	2	2	2	2
Cap, veh/h	197	1825	134	353	2440	18	411	478	406	231	42	36
Arrive On Green	1.00	1.00	1.00	0.20	1.00	1.00	0.26	0.26	0.26	0.26	0.26	0.26
Sat Flow, veh/h	274	3343	246	1774	3601	27	1407	1863	1583	740	164	139
Grp Volume(v), veh/h	4	909	954	201	853	897	338	6	489	15	0	0
Grp Sat Flow(s),veh/h/ln	274	1770	1819	1774	1770	1858	1407	1863	1583	1044	0	0
Q Serve(g_s), s	0.0	0.0	0.0	0.0	0.0	0.0	34.3	0.4	39.0	0.4	0.0	0.0
Cycle Q Clear(g_c), s	0.0	0.0	0.0	0.0	0.0	0.0	35.4	0.4	39.0	1.1	0.0	0.0
Prop In Lane	1.00		0.14	1.00		0.01	1.00		1.00	0.73		0.13
Lane Grp Cap(c), veh/h	197	966	993	353	1199	1259	411	478	406	309	0	0
V/C Ratio(X)	0.02	0.94	0.96	0.57	0.71	0.71	0.82	0.01	1.20	0.05	0.00	0.00
Avail Cap(c_a), veh/h	197	966	993	353	1199	1259	411	478	406	309	0	0
HCM Platoon Ratio	2.00	2.00	2.00	2.00	2.00	2.00	1.00	1.00	1.00	1.00	1.00	1.00
Upstream Filter(I)	1.00	1.00	1.00	1.00	1.00	1.00	1.00	1.00	1.00	1.00	0.00	0.00
Uniform Delay (d), s/veh	0.0	0.0	0.0	28.7	0.0	0.0	55.0	42.1	56.5	42.4	0.0	0.0
Incr Delay (d2), s/veh	0.2	17.8	20.4	6.5	3.6	3.5	16.8	0.0	112.9	0.3	0.0	0.0
Initial Q Delay(d3),s/veh	0.0	0.0	0.0	0.0	0.0	0.0	0.0	0.0	0.0	0.0	0.0	0.0
%ile BackOfQ(50%),veh/ln	0.0	4.8	5.6	7.5	1.2	1.2	15.8	0.2	29.8	0.5	0.0	0.0
LnGrp Delay(d),s/veh	0.2	17.8	20.4	35.2	3.6	3.5	71.8	42.2	169.4	42.7	0.0	0.0
LnGrp LOS	A	B	C	D	A	A	E	D	F	D		
Approach Vol, veh/h		1867			1951			833			15	
Approach Delay, s/veh		19.1			6.8			128.9			42.7	
Approach LOS		B			A			F			D	

Timer	1	2	3	4	5	6	7	8
Assigned Phs		2		4	5	6		8
Phs Duration (G+Y+Rc), s		108.0		44.0	20.0	88.0		44.0
Change Period (Y+Rc), s		5.0		5.0	5.0	* 5		5.0
Max Green Setting (Gmax), s		101.0		39.0	15.0	* 83		39.0
Max Q Clear Time (g_c+I1), s		2.0		41.0	2.0	2.0		3.1
Green Ext Time (p_c), s		4.5		0.0	0.2	5.2		0.1

Intersection Summary	
HCM 2010 Ctrl Delay	33.6
HCM 2010 LOS	C

Notes

* HCM 2010 computational engine requires equal clearance times for the phases crossing the barrier.

Movement	EBL	EBT	EBR	WBL	WBT	WBR	NBL	NBT	NBR	SBL	SBT	SBR
Lane Configurations												
Traffic Volume (veh/h)	44	1963	0	24	1679	87	6	1	140	224	1	86
Future Volume (veh/h)	44	1963	0	24	1679	87	6	1	140	224	1	86
Number	1	6	16	5	2	12	7	4	14	3	8	18
Initial Q (Qb), veh	0	0	0	0	0	0	0	0	0	0	0	0
Ped-Bike Adj(A_pbT)	1.00		1.00	1.00		1.00	1.00		1.00	1.00		1.00
Parking Bus, Adj	1.00	1.00	1.00	1.00	1.00	1.00	1.00	1.00	1.00	1.00	1.00	1.00
Adj Sat Flow, veh/h/ln	1863	1863	1900	1863	1863	1900	1900	1863	1900	1863	1863	1900
Adj Flow Rate, veh/h	48	2157	0	25	1767	92	7	1	167	246	1	95
Adj No. of Lanes	1	2	0	1	2	0	0	1	0	1	1	0
Peak Hour Factor	0.91	0.91	0.91	0.95	0.95	0.95	0.84	0.84	0.84	0.91	0.91	0.91
Percent Heavy Veh, %	2	2	2	2	2	2	2	2	2	2	2	2
Cap, veh/h	150	2212	0	208	2095	108	31	12	388	294	4	403
Arrive On Green	0.07	1.00	0.00	0.03	0.61	0.61	0.26	0.26	0.26	0.26	0.26	0.26
Sat Flow, veh/h	1774	3632	0	1774	3424	177	24	49	1513	1212	17	1569
Grp Volume(v), veh/h	48	2157	0	25	907	952	175	0	0	246	0	96
Grp Sat Flow(s),veh/h/ln	1774	1770	0	1774	1770	1832	1585	0	0	1212	0	1586
Q Serve(g_s), s	0.0	0.0	0.0	0.9	62.0	63.9	0.0	0.0	0.0	25.0	0.0	7.3
Cycle Q Clear(g_c), s	0.0	0.0	0.0	0.9	62.0	63.9	13.9	0.0	0.0	38.9	0.0	7.3
Prop In Lane	1.00		0.00	1.00		0.10	0.04		0.95	1.00		0.99
Lane Grp Cap(c), veh/h	150	2212	0	208	1083	1121	431	0	0	294	0	407
V/C Ratio(X)	0.32	0.98	0.00	0.12	0.84	0.85	0.41	0.00	0.00	0.84	0.00	0.24
Avail Cap(c_a), veh/h	150	2212	0	208	1083	1121	431	0	0	294	0	407
HCM Platoon Ratio	2.00	2.00	2.00	1.00	1.00	1.00	1.00	1.00	1.00	1.00	1.00	1.00
Upstream Filter(I)	1.00	1.00	0.00	1.00	1.00	1.00	1.00	0.00	0.00	1.00	0.00	1.00
Uniform Delay (d), s/veh	56.2	0.0	0.0	12.0	23.5	23.8	47.2	0.0	0.0	59.7	0.0	44.7
Incr Delay (d2), s/veh	5.6	14.1	0.0	1.2	7.8	8.1	2.8	0.0	0.0	23.7	0.0	1.4
Initial Q Delay(d3),s/veh	0.0	0.0	0.0	0.0	0.0	0.0	0.0	0.0	0.0	0.0	0.0	0.0
%ile BackOfQ(50%),veh/ln	2.1	4.3	0.0	0.5	32.3	34.5	6.5	0.0	0.0	12.3	0.0	3.4
LnGrp Delay(d),s/veh	61.8	14.1	0.0	13.2	31.2	31.9	50.0	0.0	0.0	83.4	0.0	46.1
LnGrp LOS	E	B		B	C	C	D			F		D
Approach Vol, veh/h		2205			1884			175			342	
Approach Delay, s/veh		15.2			31.4			50.0			72.9	
Approach LOS		B			C			D			E	

Timer	1	2	3	4	5	6	7	8
Assigned Phs	1	2		4	5	6		8
Phs Duration (G+Y+Rc), s	10.0	98.0		44.0	8.0	100.0		44.0
Change Period (Y+Rc), s	5.0	* 5		5.0	3.0	5.0		5.0
Max Green Setting (Gmax), s	5.0	* 93		39.0	5.0	93.0		39.0
Max Q Clear Time (g_c+I1), s	2.0	65.9		15.9	2.9	2.0		40.9
Green Ext Time (p_c), s	0.0	4.9		0.9	0.0	9.1		0.0

Intersection Summary	
HCM 2010 Ctrl Delay	27.4
HCM 2010 LOS	C

Notes

* HCM 2010 computational engine requires equal clearance times for the phases crossing the barrier.

Movement	EBL	EBT	EBR	WBL	WBT	WBR	NBL	NBT	NBR	SBL	SBT	SBR
Lane Configurations												
Traffic Volume (veh/h)	701	1384	199	342	989	352	286	900	407	449	1048	564
Future Volume (veh/h)	701	1384	199	342	989	352	286	900	407	449	1048	564
Number	3	8	18	7	4	14	1	6	16	5	2	12
Initial Q (Qb), veh	0	0	0	0	0	0	0	0	0	0	0	0
Ped-Bike Adj(A_pbT)	1.00		1.00	1.00		1.00	1.00		1.00	1.00		1.00
Parking Bus, Adj	1.00	1.00	1.00	1.00	1.00	1.00	1.00	1.00	1.00	1.00	1.00	1.00
Adj Sat Flow, veh/h/ln	1863	1863	1900	1863	1863	1900	1863	1863	1900	1863	1863	1900
Adj Flow Rate, veh/h	788	1555	224	364	1052	374	311	978	442	493	1152	620
Adj No. of Lanes	2	3	0	2	3	0	2	3	0	2	3	0
Peak Hour Factor	0.89	0.89	0.89	0.94	0.94	0.94	0.92	0.92	0.92	0.91	0.91	0.91
Percent Heavy Veh, %	2	2	2	2	2	2	2	2	2	2	2	2
Cap, veh/h	727	1647	237	382	947	336	287	2248	1016	459	2392	1117
Arrive On Green	0.21	0.37	0.37	0.11	0.26	0.26	0.08	0.66	0.66	0.13	0.71	0.71
Sat Flow, veh/h	3442	4493	646	3442	3704	1317	3442	3430	1550	3442	3390	1583
Grp Volume(v), veh/h	788	1172	607	364	963	463	311	967	453	493	1152	620
Grp Sat Flow(s),veh/h/ln	1721	1695	1749	1721	1695	1630	1721	1695	1589	1721	1695	1583
Q Serve(g_s), s	38.0	60.3	60.5	18.9	46.0	46.0	15.0	24.7	24.7	24.0	27.3	34.1
Cycle Q Clear(g_c), s	38.0	60.3	60.5	18.9	46.0	46.0	15.0	24.7	24.7	24.0	27.3	34.1
Prop In Lane	1.00		0.37	1.00		0.81	1.00		0.98	1.00		1.00
Lane Grp Cap(c), veh/h	727	1243	641	382	866	417	287	2222	1042	459	2392	1117
V/C Ratio(X)	1.08	0.94	0.95	0.95	1.11	1.11	1.08	0.43	0.44	1.07	0.48	0.55
Avail Cap(c_a), veh/h	727	1243	641	382	866	417	287	2222	1042	459	2392	1117
HCM Platoon Ratio	1.00	1.00	1.00	1.00	1.00	1.00	1.00	1.00	1.00	1.00	1.00	1.00
Upstream Filter(I)	1.00	1.00	1.00	1.00	1.00	1.00	1.00	1.00	1.00	1.00	1.00	1.00
Uniform Delay (d), s/veh	71.0	55.2	55.3	79.5	67.0	67.0	82.5	14.9	14.9	78.0	11.8	12.8
Incr Delay (d2), s/veh	58.7	14.1	23.1	33.6	65.9	77.9	77.5	0.6	1.3	63.4	0.7	2.0
Initial Q Delay(d3),s/veh	0.0	0.0	0.0	0.0	0.0	0.0	0.0	0.0	0.0	0.0	0.0	0.0
%ile BackOfQ(50%),veh/ln	24.0	30.6	33.4	10.8	29.5	29.7	10.2	11.7	11.2	15.4	12.9	15.4
LnGrp Delay(d),s/veh	129.7	69.3	78.3	113.1	132.9	144.9	160.0	15.6	16.3	141.4	12.5	14.8
LnGrp LOS	F	E	E	F	F	F	F	B	B	F	B	B
Approach Vol, veh/h		2567			1790			1731			2265	
Approach Delay, s/veh		90.0			132.0			41.7			41.2	
Approach LOS		F			F			D			D	

Timer	1	2	3	4	5	6	7	8
Assigned Phs	1	2	3	4	5	6	7	8
Phs Duration (G+Y+Rc), s	19.0	135.0	44.0	52.0	28.0	126.0	24.0	72.0
Change Period (Y+Rc), s	4.0	6.0	6.0	* 6	4.0	6.0	4.0	6.0
Max Green Setting (Gmax), s	15.0	61.0	38.0	* 46	24.0	52.0	20.0	64.0
Max Q Clear Time (g_c+I1), s	17.0	36.1	40.0	48.0	26.0	26.7	20.9	62.5
Green Ext Time (p_c), s	0.0	5.1	0.0	0.0	0.0	3.7	0.0	1.3

Intersection Summary	
HCM 2010 Ctrl Delay	75.7
HCM 2010 LOS	E

Notes

* HCM 2010 computational engine requires equal clearance times for the phases crossing the barrier.

Movement	EBL	EBT	EBR	WBL	WBT	WBR	NBL	NBT	NBR	SBL	SBT	SBR
Lane Configurations												
Traffic Volume (veh/h)	126	1998	38	0	1106	254	186	51	6	327	112	330
Future Volume (veh/h)	126	1998	38	0	1106	254	186	51	6	327	112	330
Number	1	6	16	5	2	12	7	4	14	3	8	18
Initial Q (Qb), veh	0	0	0	0	0	0	0	0	0	0	0	0
Ped-Bike Adj(A_pbT)	1.00		1.00	1.00		1.00	1.00		1.00	1.00		1.00
Parking Bus, Adj	1.00	1.00	1.00	1.00	1.00	1.00	1.00	1.00	1.00	1.00	1.00	1.00
Adj Sat Flow, veh/h/ln	1863	1863	1900	0	1863	1900	1863	1863	1863	1863	1863	1863
Adj Flow Rate, veh/h	140	2220	42	0	1202	276	232	64	8	355	122	359
Adj No. of Lanes	1	2	0	0	2	0	1	1	1	1	1	1
Peak Hour Factor	0.90	0.90	0.90	0.92	0.92	0.92	0.80	0.80	0.80	0.92	0.92	0.92
Percent Heavy Veh, %	2	2	2	0	2	2	2	2	2	2	2	2
Cap, veh/h	214	2336	44	0	1665	378	293	197	167	371	217	253
Arrive On Green	0.04	0.66	0.66	0.00	0.58	0.58	0.12	0.11	0.11	0.13	0.12	0.12
Sat Flow, veh/h	1774	3554	67	0	2959	651	1774	1863	1583	1774	1863	1583
Grp Volume(v), veh/h	140	1102	1160	0	737	741	232	64	8	355	122	359
Grp Sat Flow(s),veh/h/ln	1774	1770	1851	0	1770	1748	1774	1863	1583	1774	1863	1583
Q Serve(g_s), s	5.6	101.8	103.6	0.0	53.9	55.5	14.5	5.7	0.8	21.7	11.1	21.0
Cycle Q Clear(g_c), s	5.6	101.8	103.6	0.0	53.9	55.5	14.5	5.7	0.8	21.7	11.1	21.0
Prop In Lane	1.00		0.04	0.00		0.37	1.00		1.00	1.00		1.00
Lane Grp Cap(c), veh/h	214	1163	1217	0	1028	1015	293	197	167	371	217	253
V/C Ratio(X)	0.66	0.95	0.95	0.00	0.72	0.73	0.79	0.33	0.05	0.96	0.56	1.42
Avail Cap(c_a), veh/h	354	1163	1217	0	1028	1015	297	197	167	374	217	253
HCM Platoon Ratio	1.00	1.00	1.00	1.00	1.00	1.00	1.00	1.00	1.00	1.00	1.00	1.00
Upstream Filter(I)	1.00	1.00	1.00	0.00	1.00	1.00	1.00	1.00	1.00	1.00	1.00	1.00
Uniform Delay (d), s/veh	28.1	28.0	28.3	0.0	27.1	27.4	72.8	74.6	72.4	71.3	75.1	43.0
Incr Delay (d2), s/veh	1.3	16.4	16.8	0.0	4.3	4.6	12.3	4.4	0.5	34.9	10.1	210.2
Initial Q Delay(d3),s/veh	0.0	0.0	0.0	0.0	0.0	0.0	0.0	0.0	0.0	0.0	0.0	0.0
%ile BackOfQ(50%),veh/ln	3.7	54.6	58.2	0.0	27.4	28.0	12.1	3.2	0.4	21.0	6.4	23.9
LnGrp Delay(d),s/veh	29.4	44.5	45.1	0.0	31.4	32.0	85.1	78.9	72.9	106.1	85.2	253.2
LnGrp LOS	C	D	D		C	C	F	E	E	F	F	F
Approach Vol, veh/h		2402			1478			304			836	
Approach Delay, s/veh		43.9			31.7			83.5			166.2	
Approach LOS		D			C			F			F	

Timer	1	2	3	4	5	6	7	8
Assigned Phs	1	2	3	4		6	7	8
Phs Duration (G+Y+Rc), s	13.8	110.6	29.7	26.0		124.3	27.7	28.0
Change Period (Y+Rc), s	6.0	6.0	6.0	7.0		6.0	6.0	7.0
Max Green Setting (Gmax), s	22.0	90.0	24.0	19.0		118.0	22.0	21.0
Max Q Clear Time (g_c+I1), s	7.6	57.5	23.7	7.7		105.6	16.5	23.0
Green Ext Time (p_c), s	0.1	3.5	0.0	0.1		5.6	0.2	0.0

Intersection Summary	
HCM 2010 Ctrl Delay	63.1
HCM 2010 LOS	E

Intersection	
Int Delay, s/veh	16.5

Movement	EBL	EBT	EBR	WBL	WBT	WBR	NBL	NBT	NBR	SBL	SBT	SBR
Lane Configurations												
Traffic Vol, veh/h	26	1803	502	180	1320	23	0	0	188	0	0	40
Future Vol, veh/h	26	1803	502	180	1320	23	0	0	188	0	0	40
Conflicting Peds, #/hr	0	0	0	0	0	0	0	0	0	0	0	0
Sign Control	Free	Free	Free	Free	Free	Free	Stop	Stop	Stop	Stop	Stop	Stop
RT Channelized	-	-	None	-	-	None	-	-	None	-	-	None
Storage Length	-	-	-	300	-	-	-	-	0	-	-	0
Veh in Median Storage, #	-	0	-	-	0	-	-	0	-	-	0	-
Grade, %	-	0	-	-	0	-	-	0	-	-	0	-
Peak Hour Factor	92	92	92	92	92	92	92	92	92	92	92	92
Heavy Vehicles, %	2	2	2	2	2	2	2	2	2	2	2	2
Mvmt Flow	28	1960	546	196	1435	25	0	0	204	0	0	43

Major/Minor	Major1			Major2			Minor1			Minor2		
Conflicting Flow All	1460	0	0	2506	0	0	-	-	1253	-	-	730
Stage 1	-	-	-	-	-	-	-	-	-	-	-	-
Stage 2	-	-	-	-	-	-	-	-	-	-	-	-
Critical Hdwy	4.14	-	-	4.14	-	-	-	-	6.94	-	-	6.94
Critical Hdwy Stg 1	-	-	-	-	-	-	-	-	-	-	-	-
Critical Hdwy Stg 2	-	-	-	-	-	-	-	-	-	-	-	-
Follow-up Hdwy	2.22	-	-	2.22	-	-	-	-	3.32	-	-	3.32
Pot Cap-1 Maneuver	459	-	-	~ 178	-	-	0	0	~ 163	0	0	365
Stage 1	-	-	-	-	-	-	0	0	-	0	0	-
Stage 2	-	-	-	-	-	-	0	0	-	0	0	-
Platoon blocked, %		-	-		-	-						
Mov Cap-1 Maneuver	459	-	-	~ 178	-	-	-	-	~ 163	-	-	365
Mov Cap-2 Maneuver	-	-	-	-	-	-	-	-	-	-	-	-
Stage 1	-	-	-	-	-	-	-	-	-	-	-	-
Stage 2	-	-	-	-	-	-	-	-	-	-	-	-

Approach	EB	WB	NB	SB
HCM Control Delay, s	0.1	17.7	209.5	16.2
HCM LOS			F	C

Minor Lane/Major Mvmt	NBLn1	EBL	EBT	EBR	WBL	WBT	WBR	SBLn1
Capacity (veh/h)	163	459	-	-	~ 178	-	-	365
HCM Lane V/C Ratio	1.254	0.062	-	-	1.099	-	-	0.119
HCM Control Delay (s)	209.5	13.4	-	-	150	-	-	16.2
HCM Lane LOS	F	B	-	-	F	-	-	C
HCM 95th %tile Q(veh)	11.7	0.2	-	-	9.7	-	-	0.4

Notes			
~: Volume exceeds capacity	$: Delay exceeds 300s	+: Computation Not Defined	*: All major volume in platoon

Intersection	
Int Delay, s/veh	17.1

Movement	EBT	EBR	WBL	WBT	NBL	NBR
Lane Configurations						
Traffic Vol, veh/h	1940	51	28	1493	30	20
Future Vol, veh/h	1940	51	28	1493	30	20
Conflicting Peds, #/hr	0	0	0	0	0	0
Sign Control	Free	Free	Free	Free	Stop	Stop
RT Channelized	-	None	-	None	-	None
Storage Length	-	-	200	-	0	0
Veh in Median Storage, #	0	-	-	0	0	-
Grade, %	0	-	-	0	0	-
Peak Hour Factor	92	92	92	92	92	92
Heavy Vehicles, %	2	2	2	2	2	2
Mvmt Flow	2109	55	30	1623	33	22

Major/Minor	Major1		Major2		Minor1	
Conflicting Flow All	0	0	2164	0	3009	1082
Stage 1	-	-	-	-	2137	-
Stage 2	-	-	-	-	872	-
Critical Hdwy	-	-	4.14	-	6.84	6.94
Critical Hdwy Stg 1	-	-	-	-	5.84	-
Critical Hdwy Stg 2	-	-	-	-	5.84	-
Follow-up Hdwy	-	-	2.22	-	3.52	3.32
Pot Cap-1 Maneuver	-	-	244	-	~ 10	213
Stage 1	-	-	-	-	76	-
Stage 2	-	-	-	-	369	-
Platoon blocked, %	-	-		-		
Mov Cap-1 Maneuver	-	-	244	-	~ 9	213
Mov Cap-2 Maneuver	-	-	-	-	~ 9	-
Stage 1	-	-	-	-	76	-
Stage 2	-	-	-	-	324	-

Approach	EB	WB	NB
HCM Control Delay, s	0	0.4	$ 1206.8
HCM LOS			F

Minor Lane/Major Mvmt	NBLn1	NBLn2	EBT	EBR	WBL	WBT
Capacity (veh/h)	9	213	-	-	244	-
HCM Lane V/C Ratio	3.623	0.102	-	-	0.125	-
HCM Control Delay (s)	$ 1995.5	23.8	-	-	21.8	-
HCM Lane LOS	F	C	-	-	C	-
HCM 95th %tile Q(veh)	5.3	0.3	-	-	0.4	-

Notes			
~: Volume exceeds capacity	$: Delay exceeds 300s	+: Computation Not Defined	*: All major volume in platoon

Movement	EBL	EBT	EBR	WBL	WBT	WBR	NBL	NBT	NBR	SBL	SBT	SBR
Lane Configurations												
Traffic Volume (veh/h)	510	1227	223	236	1012	451	344	1362	387	433	2344	245
Future Volume (veh/h)	510	1227	223	236	1012	451	344	1362	387	433	2344	245
Number	3	8	18	7	4	14	1	6	16	5	2	12
Initial Q (Qb), veh	0	0	0	0	0	0	0	0	0	0	0	0
Ped-Bike Adj(A_pbT)	1.00		1.00	1.00		1.00	1.00		1.00	1.00		1.00
Parking Bus, Adj	1.00	1.00	1.00	1.00	1.00	1.00	1.00	1.00	1.00	1.00	1.00	1.00
Adj Sat Flow, veh/h/ln	1863	1863	1863	1863	1863	1863	1863	1863	1900	1863	1863	1900
Adj Flow Rate, veh/h	548	1319	240	274	1177	524	425	1681	478	446	2416	253
Adj No. of Lanes	2	3	1	2	3	1	2	3	0	2	3	0
Peak Hour Factor	0.93	0.93	0.93	0.86	0.86	0.86	0.81	0.81	0.81	0.97	0.97	0.97
Percent Heavy Veh, %	2	2	2	2	2	2	2	2	2	2	2	2
Cap, veh/h	417	1264	1129	271	1017	518	1599	3133	872	438	2103	215
Arrive On Green	0.12	0.25	0.25	0.08	0.20	0.20	0.46	0.79	0.79	0.13	0.45	0.45
Sat Flow, veh/h	3442	5085	1583	3442	5085	1583	3442	3957	1102	3442	4688	480
Grp Volume(v), veh/h	548	1319	240	274	1177	524	425	1435	724	446	1732	937
Grp Sat Flow(s),veh/h/ln	1721	1695	1583	1721	1695	1583	1721	1695	1668	1721	1695	1778
Q Serve(g_s), s	20.0	41.0	3.2	13.0	33.0	33.0	12.4	25.2	26.3	21.0	74.0	74.0
Cycle Q Clear(g_c), s	20.0	41.0	3.2	13.0	33.0	33.0	12.4	25.2	26.3	21.0	74.0	74.0
Prop In Lane	1.00		1.00	1.00		1.00	1.00		0.66	1.00		0.27
Lane Grp Cap(c), veh/h	417	1264	1129	271	1017	518	1599	2684	1321	438	1520	797
V/C Ratio(X)	1.31	1.04	0.21	1.01	1.16	1.01	0.27	0.53	0.55	1.02	1.14	1.18
Avail Cap(c_a), veh/h	417	1264	1129	271	1017	518	1599	2684	1321	438	1520	797
HCM Platoon Ratio	1.00	1.00	1.00	1.00	1.00	1.00	1.00	1.00	1.00	1.00	1.00	1.00
Upstream Filter(I)	1.00	1.00	1.00	1.00	1.00	1.00	1.00	1.00	1.00	1.00	1.00	1.00
Uniform Delay (d), s/veh	72.5	62.0	24.0	76.0	66.0	156.5	27.0	6.2	6.3	72.0	45.5	45.5
Incr Delay (d2), s/veh	157.3	37.5	0.1	57.3	82.0	42.4	0.0	0.8	1.6	47.7	71.0	92.0
Initial Q Delay(d3),s/veh	0.0	0.0	0.0	0.1	0.0	0.0	0.0	0.0	0.0	0.0	0.0	0.0
%ile BackOfQ(50%),veh/ln	18.6	23.6	6.3	8.3	23.2	56.8	5.9	11.8	12.5	12.9	49.6	56.7
LnGrp Delay(d),s/veh	229.8	99.5	24.1	133.4	148.0	198.9	27.0	7.0	8.0	119.7	116.5	137.5
LnGrp LOS	F	F	C	F	F	F	C	A	A	F	F	F
Approach Vol, veh/h		2107			1975			2584			3115	
Approach Delay, s/veh		124.8			159.5			10.5			123.3	
Approach LOS		F			F			B			F	

Timer	1	2	3	4	5	6	7	8
Assigned Phs	1	2	3	4	5	6	7	8
Phs Duration (G+Y+Rc), s	83.6	80.0	26.0	39.0	26.0	137.6	18.0	47.0
Change Period (Y+Rc), s	6.0	* 6	6.0	* 6	5.0	6.0	5.0	6.0
Max Green Setting (Gmax), s	16.0	* 74	20.0	* 33	21.0	69.0	13.0	40.0
Max Q Clear Time (g_c+I1), s	14.4	76.0	22.0	35.0	23.0	28.3	15.0	43.0
Green Ext Time (p_c), s	0.2	0.0	0.0	0.0	0.0	8.8	0.0	0.0

Intersection Summary	
HCM 2010 Ctrl Delay	101.1
HCM 2010 LOS	F

Notes

* HCM 2010 computational engine requires equal clearance times for the phases crossing the barrier.

Movement	EBL	EBT	EBR	WBL	WBT	WBR	NBL	NBT	NBR	SBL	SBT	SBR
Lane Configurations												
Traffic Volume (veh/h)	998	2083	641	256	1055	244	700	377	206	180	240	494
Future Volume (veh/h)	998	2083	641	256	1055	244	700	377	206	180	240	494
Number	1	6	16	5	2	12	7	4	14	3	8	18
Initial Q (Qb), veh	0	0	0	0	0	0	0	0	0	0	0	0
Ped-Bike Adj(A_pbT)	1.00		1.00	1.00		1.00	1.00		1.00	1.00		1.00
Parking Bus, Adj	1.00	1.00	1.00	1.00	1.00	1.00	1.00	1.00	1.00	1.00	1.00	1.00
Adj Sat Flow, veh/h/ln	1863	1863	1863	1863	1863	1900	1863	1863	1900	1863	1863	1900
Adj Flow Rate, veh/h	1073	2240	689	281	1159	268	761	410	224	188	250	515
Adj No. of Lanes	2	2	1	1	3	0	1	2	0	1	2	0
Peak Hour Factor	0.93	0.93	0.93	0.91	0.91	0.91	0.92	0.92	0.92	0.96	0.96	0.96
Percent Heavy Veh, %	2	2	2	2	2	2	2	2	2	2	2	2
Cap, veh/h	688	1475	1038	198	1262	292	464	545	295	283	197	176
Arrive On Green	0.20	0.42	0.42	0.09	0.31	0.31	0.24	0.25	0.25	0.10	0.11	0.11
Sat Flow, veh/h	3442	3539	1583	1774	4130	955	1774	2221	1200	1774	1770	1583
Grp Volume(v), veh/h	1073	2240	689	281	951	476	761	326	308	188	250	515
Grp Sat Flow(s),veh/h/ln	1721	1770	1583	1774	1695	1694	1774	1770	1651	1774	1770	1583
Q Serve(g_s), s	36.0	75.0	20.8	16.0	48.8	48.8	43.0	30.6	31.2	16.7	20.0	20.0
Cycle Q Clear(g_c), s	36.0	75.0	20.8	16.0	48.8	48.8	43.0	30.6	31.2	16.7	20.0	20.0
Prop In Lane	1.00		1.00	1.00		0.56	1.00		0.73	1.00		1.00
Lane Grp Cap(c), veh/h	688	1475	1038	198	1036	518	464	434	405	283	197	176
V/C Ratio(X)	1.56	1.52	0.66	1.42	0.92	0.92	1.64	0.75	0.76	0.67	1.27	2.93
Avail Cap(c_a), veh/h	688	1475	1038	198	1036	518	464	434	405	314	197	176
HCM Platoon Ratio	1.00	1.00	1.00	1.00	1.00	1.00	1.00	1.00	1.00	1.00	1.00	1.00
Upstream Filter(I)	1.00	1.00	1.00	1.00	1.00	1.00	1.00	1.00	1.00	1.00	1.00	1.00
Uniform Delay (d), s/veh	72.0	52.5	6.0	80.4	60.3	60.3	56.7	62.8	63.0	62.1	80.0	80.0
Incr Delay (d2), s/veh	258.6	237.1	3.3	216.5	14.1	23.8	298.0	6.8	7.9	3.2	155.8	882.6
Initial Q Delay(d3),s/veh	0.0	0.0	0.0	0.0	0.0	0.0	0.0	0.0	0.0	0.0	0.0	0.0
%ile BackOfQ(50%),veh/ln	41.8	85.2	10.0	21.7	24.9	26.3	61.5	15.8	15.1	8.4	18.3	51.9
LnGrp Delay(d),s/veh	330.6	289.6	9.3	296.9	74.5	84.1	354.7	69.6	70.9	65.4	235.8	962.6
LnGrp LOS	F	F	A	F	E	F	F	E	E	E	F	F
Approach Vol, veh/h		4002			1708			1395			953	
Approach Delay, s/veh		252.3			113.8			225.4			594.9	
Approach LOS		F			F			F			F	

Timer	1	2	3	4	5	6	7	8
Assigned Phs	1	2	3	4	5	6	7	8
Phs Duration (G+Y+Rc), s	42.0	61.0	25.8	51.2	22.0	81.0	50.0	27.0
Change Period (Y+Rc), s	6.0	6.0	7.0	7.0	6.0	6.0	7.0	7.0
Max Green Setting (Gmax), s	36.0	55.0	22.0	41.0	16.0	75.0	43.0	20.0
Max Q Clear Time (g_c+I1), s	38.0	50.8	18.7	33.2	18.0	77.0	45.0	22.0
Green Ext Time (p_c), s	0.0	1.7	0.1	2.1	0.0	0.0	0.0	0.0

Intersection Summary	
HCM 2010 Ctrl Delay	258.8
HCM 2010 LOS	F

Intersection	
Int Delay, s/veh	0.4

Movement	EBL	EBT	WBT	WBR	SBL	SBR
Lane Configurations						
Traffic Vol, veh/h	0	2469	1489	67	0	66
Future Vol, veh/h	0	2469	1489	67	0	66
Conflicting Peds, #/hr	0	0	0	0	0	0
Sign Control	Free	Free	Free	Free	Stop	Stop
RT Channelized	-	None	-	None	-	None
Storage Length	-	-	-	50	-	0
Veh in Median Storage, #	-	0	0	-	0	-
Grade, %	-	0	0	-	0	-
Peak Hour Factor	92	92	92	92	92	92
Heavy Vehicles, %	2	2	2	2	2	2
Mvmt Flow	0	2684	1618	73	0	72

Major/Minor	Major1		Major2		Minor2	
Conflicting Flow All	-	0	-	0	-	846
Stage 1	-	-	-	-	-	-
Stage 2	-	-	-	-	-	-
Critical Hdwy	-	-	-	-	-	7.14
Critical Hdwy Stg 1	-	-	-	-	-	-
Critical Hdwy Stg 2	-	-	-	-	-	-
Follow-up Hdwy	-	-	-	-	-	3.92
Pot Cap-1 Maneuver	0	-	-	-	0	262
Stage 1	0	-	-	-	0	-
Stage 2	0	-	-	-	0	-
Platoon blocked, %		-	-	-		
Mov Cap-1 Maneuver	-	-	-	-	-	262
Mov Cap-2 Maneuver	-	-	-	-	-	-
Stage 1	-	-	-	-	-	-
Stage 2	-	-	-	-	-	-

Approach	EB	WB	SB
HCM Control Delay, s	0	0	23.8
HCM LOS			C

Minor Lane/Major Mvmt	EBT	WBT	WBR	SBLn1
Capacity (veh/h)	-	-	-	262
HCM Lane V/C Ratio	-	-	-	0.274
HCM Control Delay (s)	-	-	-	23.8
HCM Lane LOS	-	-	-	C
HCM 95th %tile Q(veh)	-	-	-	1.1

Intersection	
Int Delay, s/veh	92

Movement	EBT	EBR	WBL	WBT	NBL	NBR
Lane Configurations						
Traffic Vol, veh/h	2469	0	0	1499	57	57
Future Vol, veh/h	2469	0	0	1499	57	57
Conflicting Peds, #/hr	0	0	0	0	0	0
Sign Control	Free	Free	Free	Free	Stop	Stop
RT Channelized	-	None	-	None	-	None
Storage Length	-	-	-	-	0	50
Veh in Median Storage, #	0	-	-	0	0	-
Grade, %	0	-	-	0	0	-
Peak Hour Factor	92	92	92	92	92	92
Heavy Vehicles, %	2	2	2	2	2	2
Mvmt Flow	2684	0	0	1629	62	62

Major/Minor	Major1		Major2		Minor1	
Conflicting Flow All	0	-	-	-	3499	1342
Stage 1	-	-	-	-	2684	-
Stage 2	-	-	-	-	815	-
Critical Hdwy	-	-	-	-	6.84	6.94
Critical Hdwy Stg 1	-	-	-	-	5.84	-
Critical Hdwy Stg 2	-	-	-	-	5.84	-
Follow-up Hdwy	-	-	-	-	3.52	3.32
Pot Cap-1 Maneuver	-	0	0	-	~ 5	142
Stage 1	-	0	0	-	~ 37	-
Stage 2	-	0	0	-	396	-
Platoon blocked, %	-			-		
Mov Cap-1 Maneuver	-	-	-	-	~ 5	142
Mov Cap-2 Maneuver	-	-	-	-	~ 5	-
Stage 1	-	-	-	-	~ 37	-
Stage 2	-	-	-	-	396	-

Approach	EB	WB	NB
HCM Control Delay, s	0	0	$ 3295
HCM LOS			F

Minor Lane/Major Mvmt	NBLn1	NBLn2	EBT	WBT
Capacity (veh/h)	5	142	-	-
HCM Lane V/C Ratio	12.391	0.436	-	-
HCM Control Delay (s)	$ 6541.3	48.7	-	-
HCM Lane LOS	F	E	-	-
HCM 95th %tile Q(veh)	9.6	1.9	-	-

Notes			
~: Volume exceeds capacity	$: Delay exceeds 300s	+: Computation Not Defined	*: All major volume in platoon

Intersection	
Int Delay, s/veh	0

Movement	EBL	EBT	WBT	WBR	SBL	SBR
Lane Configurations						
Traffic Vol, veh/h	0	2526	1468	27	0	4
Future Vol, veh/h	0	2526	1468	27	0	4
Conflicting Peds, #/hr	0	0	0	0	0	0
Sign Control	Free	Free	Free	Free	Stop	Stop
RT Channelized	-	None	-	None	-	None
Storage Length	-	-	-	-	-	0
Veh in Median Storage, #	-	0	0	-	0	-
Grade, %	-	0	0	-	0	-
Peak Hour Factor	92	92	92	92	92	92
Heavy Vehicles, %	2	2	2	2	2	2
Mvmt Flow	0	2746	1596	29	0	4

Major/Minor	Major1		Major2		Minor2	
Conflicting Flow All	-	0	-	0	-	813
Stage 1	-	-	-	-	-	-
Stage 2	-	-	-	-	-	-
Critical Hdwy	-	-	-	-	-	6.94
Critical Hdwy Stg 1	-	-	-	-	-	-
Critical Hdwy Stg 2	-	-	-	-	-	-
Follow-up Hdwy	-	-	-	-	-	3.32
Pot Cap-1 Maneuver	0	-	-	-	0	322
Stage 1	0	-	-	-	0	-
Stage 2	0	-	-	-	0	-
Platoon blocked, %		-	-	-		
Mov Cap-1 Maneuver	-	-	-	-	-	322
Mov Cap-2 Maneuver	-	-	-	-	-	-
Stage 1	-	-	-	-	-	-
Stage 2	-	-	-	-	-	-

Approach	EB	WB	SB
HCM Control Delay, s	0	0	16.3
HCM LOS			C

Minor Lane/Major Mvmt	EBT	WBT	WBR	SBLn1
Capacity (veh/h)	-	-	-	322
HCM Lane V/C Ratio	-	-	-	0.014
HCM Control Delay (s)	-	-	-	16.3
HCM Lane LOS	-	-	-	C
HCM 95th %tile Q(veh)	-	-	-	0

Movement	EBL	EBT	EBR	WBL	WBT	WBR	NBL	NBT	NBR	SBL	SBT	SBR
Lane Configurations												
Traffic Volume (veh/h)	222	1905	399	152	1168	166	186	147	253	182	85	141
Future Volume (veh/h)	222	1905	399	152	1168	166	186	147	253	182	85	141
Number	1	6	16	5	2	12	7	4	14	3	8	18
Initial Q (Qb), veh	0	0	0	0	0	0	0	0	0	0	0	0
Ped-Bike Adj(A_pbT)	1.00		1.00	1.00		1.00	1.00		1.00	1.00		1.00
Parking Bus, Adj	1.00	1.00	1.00	1.00	1.00	1.00	1.00	1.00	1.00	1.00	1.00	1.00
Adj Sat Flow, veh/h/ln	1863	1863	1900	1863	1863	1900	1863	1863	1863	1863	1863	1863
Adj Flow Rate, veh/h	239	2048	429	160	1229	175	209	165	284	209	98	162
Adj No. of Lanes	1	2	0	1	2	0	1	1	1	1	1	1
Peak Hour Factor	0.93	0.93	0.93	0.95	0.95	0.95	0.89	0.89	0.89	0.87	0.87	0.87
Percent Heavy Veh, %	2	2	2	2	2	2	2	2	2	2	2	2
Cap, veh/h	387	1858	376	515	2598	368	169	261	222	195	286	243
Arrive On Green	0.08	0.63	0.63	0.53	1.00	1.00	0.06	0.14	0.14	0.06	0.15	0.15
Sat Flow, veh/h	1774	2934	594	1774	3113	441	1774	1863	1583	1774	1863	1583
Grp Volume(v), veh/h	239	1207	1270	160	696	708	209	165	284	209	98	162
Grp Sat Flow(s),veh/h/ln	1774	1770	1758	1774	1770	1785	1774	1863	1583	1774	1863	1583
Q Serve(g_s), s	8.7	95.0	95.0	2.9	0.0	0.0	9.0	12.5	21.0	9.0	7.1	14.5
Cycle Q Clear(g_c), s	8.7	95.0	95.0	2.9	0.0	0.0	9.0	12.5	21.0	9.0	7.1	14.5
Prop In Lane	1.00		0.34	1.00		0.25	1.00		1.00	1.00		1.00
Lane Grp Cap(c), veh/h	387	1121	1113	515	1477	1490	169	261	222	195	286	243
V/C Ratio(X)	0.62	1.08	1.14	0.31	0.47	0.48	1.24	0.63	1.28	1.07	0.34	0.67
Avail Cap(c_a), veh/h	549	1121	1113	515	1477	1490	169	261	222	195	286	243
HCM Platoon Ratio	1.00	1.00	1.00	2.00	2.00	2.00	1.00	1.00	1.00	1.00	1.00	1.00
Upstream Filter(I)	1.00	1.00	1.00	0.23	0.23	0.23	1.00	1.00	1.00	1.00	1.00	1.00
Uniform Delay (d), s/veh	12.1	27.5	27.5	26.4	0.0	0.0	65.1	60.9	64.5	67.8	56.7	59.9
Incr Delay (d2), s/veh	1.6	50.1	74.5	0.1	0.3	0.3	147.1	5.7	156.5	85.1	1.0	7.6
Initial Q Delay(d3),s/veh	0.0	0.0	0.0	0.0	0.0	0.0	0.0	0.0	0.0	0.0	0.0	0.0
%ile BackOfQ(50%),veh/ln	4.4	61.7	68.8	3.4	0.1	0.1	16.0	6.9	18.8	12.7	3.7	6.9
LnGrp Delay(d),s/veh	13.7	77.6	102.0	26.5	0.3	0.3	212.3	66.5	221.0	152.9	57.8	67.5
LnGrp LOS	B	F	F	C	A	A	F	E	F	F	E	E
Approach Vol, veh/h		2716			1564			658			469	
Approach Delay, s/veh		83.4			2.9			179.5			103.5	
Approach LOS		F			A			F			F	

Timer	1	2	3	4	5	6	7	8
Assigned Phs	1	2	3	4	5	6	7	8
Phs Duration (G+Y+Rc), s	14.3	130.2	14.0	26.0	44.5	100.0	12.0	28.0
Change Period (Y+Rc), s	3.0	5.0	5.0	* 5	5.0	* 5	3.0	5.0
Max Green Setting (Gmax), s	25.0	79.0	9.0	* 21	9.0	* 95	9.0	21.0
Max Q Clear Time (g_c+I1), s	10.7	2.0	11.0	23.0	4.9	97.0	11.0	16.5
Green Ext Time (p_c), s	0.6	23.2	0.0	0.0	0.1	0.0	0.0	0.6

Intersection Summary	
HCM 2010 Ctrl Delay	73.6
HCM 2010 LOS	E

Notes

* HCM 2010 computational engine requires equal clearance times for the phases crossing the barrier.

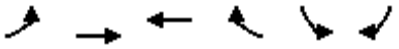

Movement	EBL	EBT	WBT	WBR	SBL	SBR
Lane Configurations						
Traffic Volume (veh/h)	309	1994	1297	525	327	229
Future Volume (veh/h)	309	1994	1297	525	327	229
Number	1	6	2	12	3	18
Initial Q (Qb), veh	0	0	0	0	0	0
Ped-Bike Adj(A_pbT)	1.00			1.00	1.00	1.00
Parking Bus, Adj	1.00	1.00	1.00	1.00	1.00	1.00
Adj Sat Flow, veh/h/ln	1863	1863	1863	1900	1863	1863
Adj Flow Rate, veh/h	322	2077	1380	559	352	246
Adj No. of Lanes	1	2	2	0	1	1
Peak Hour Factor	0.96	0.96	0.94	0.94	0.93	0.93
Percent Heavy Veh, %	2	2	2	2	2	2
Cap, veh/h	412	2826	1406	534	355	642
Arrive On Green	0.41	1.00	0.56	0.56	0.20	0.20
Sat Flow, veh/h	1774	3632	2604	953	1774	1583
Grp Volume(v), veh/h	322	2077	945	994	352	246
Grp Sat Flow(s),veh/h/ln	1774	1770	1770	1695	1774	1583
Q Serve(g_s), s	18.8	0.0	75.7	84.0	29.7	0.0
Cycle Q Clear(g_c), s	18.8	0.0	75.7	84.0	29.7	0.0
Prop In Lane	1.00			0.56	1.00	1.00
Lane Grp Cap(c), veh/h	412	2826	991	949	355	642
V/C Ratio(X)	0.78	0.73	0.95	1.05	0.99	0.38
Avail Cap(c_a), veh/h	412	2826	991	949	355	642
HCM Platoon Ratio	2.00	2.00	1.00	1.00	1.00	1.00
Upstream Filter(I)	0.09	0.09	1.00	1.00	1.00	1.00
Uniform Delay (d), s/veh	39.3	0.0	31.2	33.0	59.9	31.4
Incr Delay (d2), s/veh	0.9	0.2	19.4	42.3	45.5	0.3
Initial Q Delay(d3),s/veh	0.0	0.0	0.0	0.0	0.0	0.0
%ile BackOfQ(50%),veh/ln	11.2	0.1	42.1	50.2	19.1	7.2
LnGrp Delay(d),s/veh	40.2	0.2	50.6	75.3	105.4	31.7
LnGrp LOS	D	A	D	F	F	C
Approach Vol, veh/h		2399	1939		598	
Approach Delay, s/veh		5.5	63.3		75.1	
Approach LOS		A	E		E	

Timer	1	2	3	4	5	6	7	8
Assigned Phs	1	2				6		8
Phs Duration (G+Y+Rc), s	35.8	89.0				124.8		35.0
Change Period (Y+Rc), s	5.0	* 5				5.0		5.0
Max Green Setting (Gmax), s	23.6	* 84				110.0		30.0
Max Q Clear Time (g_c+I1), s	20.8	86.0				2.0		31.7
Green Ext Time (p_c), s	0.2	0.0				8.4		0.0

Intersection Summary	
HCM 2010 Ctrl Delay	36.6
HCM 2010 LOS	D

Notes

* HCM 2010 computational engine requires equal clearance times for the phases crossing the barrier.

Intersection	
Int Delay, s/veh	16.4

Movement	EBL	EBT	WBT	WBR	SBL	SBR
Lane Configurations						
Traffic Vol, veh/h	112	2209	1770	18	9	52
Future Vol, veh/h	112	2209	1770	18	9	52
Conflicting Peds, #/hr	0	0	0	0	0	0
Sign Control	Free	Free	Free	Free	Stop	Stop
RT Channelized	-	None	-	None	-	None
Storage Length	100	-	-	-	0	-
Veh in Median Storage, #	-	0	0	-	0	-
Grade, %	-	0	0	-	0	-
Peak Hour Factor	92	92	92	92	92	92
Heavy Vehicles, %	2	2	2	2	2	2
Mvmt Flow	122	2401	1924	20	10	57

Major/Minor	Major1		Major2		Minor2	
Conflicting Flow All	1944	0	-	0	3379	972
Stage 1	-	-	-	-	1934	-
Stage 2	-	-	-	-	1445	-
Critical Hdwy	4.14	-	-	-	6.84	6.94
Critical Hdwy Stg 1	-	-	-	-	5.84	-
Critical Hdwy Stg 2	-	-	-	-	5.84	-
Follow-up Hdwy	2.22	-	-	-	3.52	3.32
Pot Cap-1 Maneuver	298	-	-	-	~ 6	252
Stage 1	-	-	-	-	99	-
Stage 2	-	-	-	-	183	-
Platoon blocked, %		-	-	-		
Mov Cap-1 Maneuver	298	-	-	-	~ 4	252
Mov Cap-2 Maneuver	-	-	-	-	~ 4	-
Stage 1	-	-	-	-	59	-
Stage 2	-	-	-	-	183	-

Approach	EB	WB	SB
HCM Control Delay, s	1.2	0	$ 1077.6
HCM LOS			F

Minor Lane/Major Mvmt	EBL	EBT	WBT	WBR	SBLn1
Capacity (veh/h)	298	-	-	-	25
HCM Lane V/C Ratio	0.409	-	-	-	2.652
HCM Control Delay (s)	25.2	-	-	-	$ 1077.6
HCM Lane LOS	D	-	-	-	F
HCM 95th %tile Q(veh)	1.9	-	-	-	8.2

Notes			
~: Volume exceeds capacity	$: Delay exceeds 300s	+: Computation Not Defined	*: All major volume in platoon

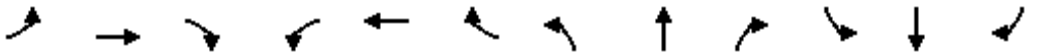

Movement	EBL	EBT	EBR	WBL	WBT	WBR	NBL	NBT	NBR	SBL	SBT	SBR
Lane Configurations												
Traffic Volume (vph)	236	1935	47	73	1588	132	69	21	91	58	5	132
Future Volume (vph)	236	1935	47	73	1588	132	69	21	91	58	5	132
Ideal Flow (vphpl)	1900	1900	1900	1900	1900	1900	1900	1900	1900	1900	1900	1900
Total Lost time (s)	4.5	5.0		4.5	5.0			6.0	6.0		6.0	6.0
Lane Util. Factor	1.00	0.95		1.00	0.95			1.00	1.00		1.00	1.00
Frt	1.00	1.00		1.00	0.99			1.00	0.85		1.00	0.85
Flt Protected	0.95	1.00		0.95	1.00			0.96	1.00		0.96	1.00
Satd. Flow (prot)	1770	3527		1770	3498			1794	1583		1780	1583
Flt Permitted	0.04	1.00		0.04	1.00			0.96	1.00		0.96	1.00
Satd. Flow (perm)	78	3527		76	3498			1794	1583		1780	1583
Peak-hour factor, PHF	0.95	0.95	0.95	0.96	0.96	0.96	0.83	0.83	0.83	0.91	0.91	0.91
Adj. Flow (vph)	248	2037	49	76	1654	138	83	25	110	64	5	145
RTOR Reduction (vph)	0	1	0	0	3	0	0	0	102	0	0	127
Lane Group Flow (vph)	248	2085	0	76	1789	0	0	108	8	0	69	18
Turn Type	pm+pt	NA		pm+pt	NA		Split	NA	Perm	Split	NA	Perm
Protected Phases	1	6		5	2		4	4		3	3	
Permitted Phases	6			2					4			3
Actuated Green, G (s)	138.7	126.3		117.6	109.7			13.8	13.8		10.5	10.5
Effective Green, g (s)	138.7	126.3		117.6	109.7			13.8	13.8		10.5	10.5
Actuated g/C Ratio	0.77	0.70		0.65	0.61			0.08	0.08		0.06	0.06
Clearance Time (s)	4.5	5.0		4.5	5.0			6.0	6.0		6.0	6.0
Vehicle Extension (s)	3.0	1.0		3.0	1.0			2.5	2.5		2.5	2.5
Lane Grp Cap (vph)	290	2474		124	2131			137	121		103	92
v/s Ratio Prot	c0.12	0.59		0.03	0.51			c0.06			c0.04	
v/s Ratio Perm	c0.54			0.37					0.01			0.01
v/c Ratio	0.86	0.84		0.61	0.84			0.79	0.07		0.67	0.19
Uniform Delay, d1	61.6	19.6		30.3	28.1			81.7	77.1		83.1	80.7
Progression Factor	1.00	1.00		1.00	1.00			1.00	1.00		1.00	1.00
Incremental Delay, d2	21.1	3.7		8.7	4.2			24.5	0.2		13.9	0.8
Delay (s)	82.7	23.3		38.9	32.3			106.1	77.3		96.9	81.5
Level of Service	F	C		D	C			F	E		F	F
Approach Delay (s)		29.6			32.6			91.6			86.5	
Approach LOS		C			C			F			F	

Intersection Summary			
HCM 2000 Control Delay	36.3	HCM 2000 Level of Service	D
HCM 2000 Volume to Capacity ratio	0.85		
Actuated Cycle Length (s)	180.0	Sum of lost time (s)	21.5
Intersection Capacity Utilization	85.7%	ICU Level of Service	E
Analysis Period (min)	15		

c Critical Lane Group

Movement	EBT	EBR	WBL	WBT	NBL	NBR
Lane Configurations						
Traffic Volume (veh/h)	1788	296	322	1524	269	516
Future Volume (veh/h)	1788	296	322	1524	269	516
Number	6	16	5	2	7	14
Initial Q (Qb), veh	0	0	0	0	0	0
Ped-Bike Adj(A_pbT)		1.00	1.00		1.00	1.00
Parking Bus, Adj	1.00	1.00	1.00	1.00	1.00	1.00
Adj Sat Flow, veh/h/ln	1863	1900	1863	1863	1863	1863
Adj Flow Rate, veh/h	1843	305	354	1675	296	567
Adj No. of Lanes	2	0	1	2	1	1
Peak Hour Factor	0.97	0.97	0.91	0.91	0.91	0.91
Percent Heavy Veh, %	2	2	2	2	2	2
Cap, veh/h	1751	282	461	2972	320	655
Arrive On Green	0.57	0.57	0.47	1.00	0.18	0.18
Sat Flow, veh/h	3147	492	1774	3632	1774	1583
Grp Volume(v), veh/h	1046	1102	354	1675	296	567
Grp Sat Flow(s),veh/h/ln	1770	1776	1774	1770	1774	1583
Q Serve(g_s), s	86.0	86.0	19.8	0.0	24.6	14.1
Cycle Q Clear(g_c), s	86.0	86.0	19.8	0.0	24.6	14.1
Prop In Lane		0.28	1.00		1.00	1.00
Lane Grp Cap(c), veh/h	1015	1018	461	2972	320	655
V/C Ratio(X)	1.03	1.08	0.77	0.56	0.92	0.87
Avail Cap(c_a), veh/h	1015	1018	461	2972	331	665
HCM Platoon Ratio	1.00	1.00	2.00	2.00	1.00	1.00
Upstream Filter(I)	0.46	0.46	0.54	0.54	1.00	1.00
Uniform Delay (d), s/veh	32.0	32.0	34.7	0.0	60.5	40.2
Incr Delay (d2), s/veh	27.7	45.4	3.8	0.4	30.0	11.3
Initial Q Delay(d3),s/veh	0.0	0.0	0.0	0.0	0.0	0.0
%ile BackOfQ(50%),veh/ln	49.5	54.7	12.1	0.2	14.8	29.5
LnGrp Delay(d),s/veh	59.7	77.4	38.5	0.4	90.4	51.4
LnGrp LOS	F	F	D	A	F	D
Approach Vol, veh/h	2148			2029	863	
Approach Delay, s/veh	68.8			7.1	64.8	
Approach LOS	E			A	E	

Timer	1	2	3	4	5	6	7	8
Assigned Phs		2		4	5	6		
Phs Duration (G+Y+Rc), s		131.0		32.1	40.0	91.0		
Change Period (Y+Rc), s		5.0		5.0	5.0	* 5		
Max Green Setting (Gmax), s		112.0		28.0	23.0	* 86		
Max Q Clear Time (g_c+I1), s		2.0		26.6	21.8	88.0		
Green Ext Time (p_c), s		5.5		0.5	0.1	0.0		

Intersection Summary	
HCM 2010 Ctrl Delay	43.3
HCM 2010 LOS	D

Notes

* HCM 2010 computational engine requires equal clearance times for the phases crossing the barrier.

Movement	EBL	EBT	EBR	WBL	WBT	WBR	NBL	NBT	NBR	SBL	SBT	SBR
Lane Configurations												
Traffic Volume (veh/h)	128	1902	402	123	1663	31	122	1	109	14	18	61
Future Volume (veh/h)	128	1902	402	123	1663	31	122	1	109	14	18	61
Number	1	6	16	5	2	12	7	4	14	3	8	18
Initial Q (Qb), veh	0	0	0	0	0	0	0	0	0	0	0	0
Ped-Bike Adj(A_pbT)	1.00		1.00	1.00		1.00	1.00		1.00	1.00		1.00
Parking Bus, Adj	1.00	1.00	1.00	1.00	1.00	1.00	1.00	1.00	1.00	1.00	1.00	1.00
Adj Sat Flow, veh/h/ln	1863	1863	1900	1863	1863	1900	1863	1863	1900	1900	1863	1900
Adj Flow Rate, veh/h	141	2090	442	129	1751	33	145	1	130	21	27	91
Adj No. of Lanes	1	2	0	1	2	0	1	1	0	0	1	0
Peak Hour Factor	0.91	0.91	0.91	0.95	0.95	0.95	0.84	0.84	0.84	0.67	0.67	0.67
Percent Heavy Veh, %	2	2	2	2	2	2	2	2	2	2	2	2
Cap, veh/h	195	1995	408	131	2447	46	211	2	271	51	67	171
Arrive On Green	0.08	1.00	1.00	0.03	0.46	0.46	0.17	0.17	0.17	0.17	0.17	0.17
Sat Flow, veh/h	1774	2929	598	1774	3554	67	1269	12	1573	134	389	992
Grp Volume(v), veh/h	141	1234	1298	129	870	914	145	0	131	139	0	0
Grp Sat Flow(s),veh/h/ln	1774	1770	1757	1774	1770	1851	1269	0	1585	1515	0	0
Q Serve(g_s), s	3.8	102.2	99.8	6.8	59.2	59.6	10.4	0.0	11.2	1.8	0.0	0.0
Cycle Q Clear(g_c), s	3.8	102.2	99.8	6.8	59.2	59.6	23.4	0.0	11.2	13.0	0.0	0.0
Prop In Lane	1.00		0.34	1.00		0.04	1.00		0.99	0.15		0.65
Lane Grp Cap(c), veh/h	195	1206	1197	131	1219	1275	211	0	273	288	0	0
V/C Ratio(X)	0.72	1.02	1.08	0.99	0.71	0.72	0.69	0.00	0.48	0.48	0.00	0.00
Avail Cap(c_a), veh/h	314	1206	1197	131	1219	1275	238	0	306	322	0	0
HCM Platoon Ratio	2.00	2.00	2.00	0.67	0.67	0.67	1.00	1.00	1.00	1.00	1.00	1.00
Upstream Filter(I)	0.09	0.09	0.09	1.00	1.00	1.00	1.00	0.00	1.00	1.00	0.00	0.00
Uniform Delay (d), s/veh	27.6	0.0	0.0	56.2	28.5	28.6	63.1	0.0	56.1	56.3	0.0	0.0
Incr Delay (d2), s/veh	0.2	14.6	39.7	74.1	3.6	3.5	6.2	0.0	1.0	0.9	0.0	0.0
Initial Q Delay(d3),s/veh	0.0	0.0	0.0	0.0	0.0	0.0	0.0	0.0	0.0	0.0	0.0	0.0
%ile BackOfQ(50%),veh/ln	3.8	4.9	13.2	8.0	30.2	31.7	6.3	0.0	5.0	5.4	0.0	0.0
LnGrp Delay(d),s/veh	27.7	14.6	39.7	130.3	32.1	32.1	69.3	0.0	57.0	57.2	0.0	0.0
LnGrp LOS	C	F	F	F	C	C	E		E	E		
Approach Vol, veh/h		2673			1913			276			139	
Approach Delay, s/veh		27.5			38.7			63.5			57.2	
Approach LOS		C			D			E			E	

Timer	1	2	3	4	5	6	7	8
Assigned Phs	1	2		4	5	6		8
Phs Duration (G+Y+Rc), s	8.9	109.3		31.8	10.0	108.2		31.8
Change Period (Y+Rc), s	3.0	6.0		6.0	3.0	6.0		6.0
Max Green Setting (Gmax), s	16.0	90.0		29.0	7.0	99.0		29.0
Max Q Clear Time (g_c+I1), s	5.8	61.6		25.4	8.8	104.2		15.0
Green Ext Time (p_c), s	0.1	4.5		0.3	0.0	0.0		0.5

Intersection Summary		
HCM 2010 Ctrl Delay	34.6	
HCM 2010 LOS	C	

Movement	EBL	EBT	EBR	WBL	WBT	WBR	NBL	NBT	NBR	SBL	SBT	SBR
Lane Configurations												
Traffic Volume (veh/h)	8	1718	299	422	1599	9	205	0	277	5	6	13
Future Volume (veh/h)	8	1718	299	422	1599	9	205	0	277	5	6	13
Number	1	6	16	5	2	12	7	4	14	3	8	18
Initial Q (Qb), veh	0	0	0	0	0	0	0	0	0	0	0	0
Ped-Bike Adj(A_pbT)	1.00		1.00	1.00		1.00	1.00		1.00	1.00		1.00
Parking Bus, Adj	1.00	1.00	1.00	1.00	1.00	1.00	1.00	1.00	1.00	1.00	1.00	1.00
Adj Sat Flow, veh/h/ln	1863	1863	1900	1863	1863	1900	1863	1863	1863	1900	1863	1900
Adj Flow Rate, veh/h	8	1808	315	444	1683	9	218	0	295	6	7	16
Adj No. of Lanes	1	2	0	1	2	0	1	1	1	0	1	0
Peak Hour Factor	0.95	0.95	0.95	0.95	0.95	0.95	0.94	0.94	0.94	0.81	0.81	0.81
Percent Heavy Veh, %	2	2	2	2	2	2	2	2	2	2	2	2
Cap, veh/h	193	1515	256	556	3056	16	328	370	315	75	92	169
Arrive On Green	0.67	0.67	0.67	0.63	1.00	1.00	0.20	0.00	0.20	0.20	0.20	0.20
Sat Flow, veh/h	290	3029	513	1774	3610	19	1383	1863	1583	232	460	852
Grp Volume(v), veh/h	8	1034	1089	444	825	867	218	0	295	29	0	0
Grp Sat Flow(s),veh/h/ln	290	1770	1772	1774	1770	1859	1383	1863	1583	1544	0	0
Q Serve(g_s), s	1.4	75.0	75.0	28.1	0.0	0.0	19.7	0.0	27.5	0.0	0.0	0.0
Cycle Q Clear(g_c), s	1.4	75.0	75.0	28.1	0.0	0.0	21.8	0.0	27.5	2.1	0.0	0.0
Prop In Lane	1.00		0.29	1.00		0.01	1.00		1.00	0.21		0.55
Lane Grp Cap(c), veh/h	193	885	886	556	1498	1574	328	370	315	336	0	0
V/C Ratio(X)	0.04	1.17	1.23	0.80	0.55	0.55	0.66	0.00	0.94	0.09	0.00	0.00
Avail Cap(c_a), veh/h	193	885	886	556	1498	1574	339	385	327	348	0	0
HCM Platoon Ratio	1.33	1.33	1.33	2.00	2.00	2.00	1.00	1.00	1.00	1.00	1.00	1.00
Upstream Filter(I)	1.00	1.00	1.00	0.45	0.45	0.45	1.00	0.00	1.00	1.00	0.00	0.00
Uniform Delay (d), s/veh	12.8	25.1	25.1	24.5	0.0	0.0	56.6	0.0	59.2	49.0	0.0	0.0
Incr Delay (d2), s/veh	0.4	88.2	112.8	3.5	0.7	0.6	4.6	0.0	33.1	0.1	0.0	0.0
Initial Q Delay(d3),s/veh	0.0	0.0	0.0	0.0	0.0	0.0	0.0	0.0	0.0	0.0	0.0	0.0
%ile BackOfQ(50%),veh/ln	0.1	57.9	64.0	14.1	0.3	0.3	9.0	0.0	15.0	1.0	0.0	0.0
LnGrp Delay(d),s/veh	13.2	113.3	138.0	28.0	0.7	0.6	61.2	0.0	92.3	49.1	0.0	0.0
LnGrp LOS	B	F	F	C	A	A	E		F	D		
Approach Vol, veh/h		2131			2136			513			29	
Approach Delay, s/veh		125.5			6.3			79.1			49.1	
Approach LOS		F			A			E			D	

Timer	1	2	3	4	5	6	7	8
Assigned Phs		2		4	5	6		8
Phs Duration (G+Y+Rc), s		132.0		34.8	52.0	80.0		34.8
Change Period (Y+Rc), s		5.0		5.0	5.0	* 5		5.0
Max Green Setting (Gmax), s		109.0		31.0	31.0	* 75		31.0
Max Q Clear Time (g_c+I1), s		2.0		29.5	30.1	77.0		4.1
Green Ext Time (p_c), s		4.2		0.3	0.1	0.0		0.1

Intersection Summary	
HCM 2010 Ctrl Delay	67.2
HCM 2010 LOS	E

Notes

* HCM 2010 computational engine requires equal clearance times for the phases crossing the barrier.

Movement	EBL	EBT	EBR	WBL	WBT	WBR	NBL	NBT	NBR	SBL	SBT	SBR
Lane Configurations												
Traffic Volume (veh/h)	133	1867	0	52	1481	263	2	0	40	172	0	68
Future Volume (veh/h)	133	1867	0	52	1481	263	2	0	40	172	0	68
Number	1	6	16	5	2	12	7	4	14	3	8	18
Initial Q (Qb), veh	0	0	0	0	0	0	0	0	0	0	0	0
Ped-Bike Adj(A_pbT)	1.00		1.00	1.00		1.00	1.00		1.00	1.00		1.00
Parking Bus, Adj	1.00	1.00	1.00	1.00	1.00	1.00	1.00	1.00	1.00	1.00	1.00	1.00
Adj Sat Flow, veh/h/ln	1863	1863	1900	1863	1863	1900	1900	1863	1900	1863	1863	1900
Adj Flow Rate, veh/h	141	1986	0	55	1576	280	3	0	56	212	0	84
Adj No. of Lanes	1	2	0	1	2	0	0	1	0	1	1	0
Peak Hour Factor	0.94	0.94	0.94	0.94	0.94	0.94	0.71	0.71	0.71	0.81	0.81	0.81
Percent Heavy Veh, %	2	2	2	2	2	2	2	2	2	2	2	2
Cap, veh/h	291	2521	0	224	1850	321	29	10	258	280	0	271
Arrive On Green	0.23	1.00	0.00	0.03	0.61	0.61	0.17	0.00	0.17	0.17	0.00	0.17
Sat Flow, veh/h	1774	3632	0	1774	3017	523	23	58	1506	1342	0	1583
Grp Volume(v), veh/h	141	1986	0	55	908	948	59	0	0	212	0	84
Grp Sat Flow(s),veh/h/ln	1774	1770	0	1774	1770	1770	1587	0	0	1342	0	1583
Q Serve(g_s), s	2.2	0.0	0.0	1.9	61.2	66.8	0.0	0.0	0.0	18.2	0.0	7.0
Cycle Q Clear(g_c), s	2.2	0.0	0.0	1.9	61.2	66.8	4.8	0.0	0.0	23.0	0.0	7.0
Prop In Lane	1.00		0.00	1.00		0.30	0.05		0.95	1.00		1.00
Lane Grp Cap(c), veh/h	291	2521	0	224	1085	1086	297	0	0	280	0	271
V/C Ratio(X)	0.48	0.79	0.00	0.25	0.84	0.87	0.20	0.00	0.00	0.76	0.00	0.31
Avail Cap(c_a), veh/h	291	2521	0	230	1085	1086	363	0	0	337	0	338
HCM Platoon Ratio	2.00	2.00	2.00	1.00	1.00	1.00	1.00	1.00	1.00	1.00	1.00	1.00
Upstream Filter(I)	0.09	0.09	0.00	1.00	1.00	1.00	1.00	0.00	0.00	1.00	0.00	1.00
Uniform Delay (d), s/veh	48.0	0.0	0.0	12.0	23.0	24.1	53.5	0.0	0.0	61.0	0.0	54.4
Incr Delay (d2), s/veh	0.1	0.2	0.0	0.6	7.7	9.7	0.3	0.0	0.0	7.8	0.0	0.6
Initial Q Delay(d3),s/veh	0.0	0.0	0.0	0.0	0.0	0.0	0.0	0.0	0.0	0.0	0.0	0.0
%ile BackOfQ(50%),veh/ln	4.6	0.1	0.0	1.0	32.1	35.3	2.1	0.0	0.0	9.3	0.0	3.1
LnGrp Delay(d),s/veh	48.1	0.2	0.0	12.6	30.7	33.8	53.8	0.0	0.0	68.8	0.0	55.1
LnGrp LOS	D	A		B	C	C	D			E		E
Approach Vol, veh/h		2127			1911			59			296	
Approach Delay, s/veh		3.4			31.8			53.8			64.9	
Approach LOS		A			C			D			E	

Timer	1	2	3	4	5	6	7	8
Assigned Phs	1	2		4	5	6		8
Phs Duration (G+Y+Rc), s	12.3	97.0		30.7	7.5	111.8		30.7
Change Period (Y+Rc), s	5.0	* 5		5.0	3.0	5.0		5.0
Max Green Setting (Gmax), s	13.6	* 92		32.0	5.0	100.0		32.0
Max Q Clear Time (g_c+I1), s	4.2	68.8		6.8	3.9	2.0		25.0
Green Ext Time (p_c), s	0.2	15.1		0.3	0.0	34.4		0.7

Intersection Summary	
HCM 2010 Ctrl Delay	20.6
HCM 2010 LOS	C

Notes

* HCM 2010 computational engine requires equal clearance times for the phases crossing the barrier.

Movement	EBL	EBT	EBR	WBL	WBT	WBR	NBL	NBT	NBR	SBL	SBT	SBR
Lane Configurations												
Traffic Volume (veh/h)	526	1256	205	415	1077	508	349	1250	339	234	1287	433
Future Volume (veh/h)	526	1256	205	415	1077	508	349	1250	339	234	1287	433
Number	3	8	18	7	4	14	1	6	16	5	2	12
Initial Q (Qb), veh	0	0	0	0	0	0	0	0	0	0	0	0
Ped-Bike Adj(A_pbT)	1.00		1.00	1.00		1.00	1.00		1.00	1.00		1.00
Parking Bus, Adj	1.00	1.00	1.00	1.00	1.00	1.00	1.00	1.00	1.00	1.00	1.00	1.00
Adj Sat Flow, veh/h/ln	1863	1863	1900	1863	1863	1900	1863	1863	1900	1863	1863	1900
Adj Flow Rate, veh/h	572	1365	223	441	1146	540	364	1302	353	244	1341	451
Adj No. of Lanes	2	3	0	2	3	0	2	3	0	2	3	0
Peak Hour Factor	0.92	0.92	0.92	0.94	0.94	0.94	0.96	0.96	0.96	0.96	0.96	0.96
Percent Heavy Veh, %	2	2	2	2	2	2	2	2	2	2	2	2
Cap, veh/h	492	1322	216	442	969	452	295	1423	385	246	1292	432
Arrive On Green	0.14	0.30	0.30	0.13	0.29	0.29	0.09	0.36	0.36	0.07	0.34	0.34
Sat Flow, veh/h	3442	4406	720	3442	3390	1583	3442	3984	1078	3442	3770	1261
Grp Volume(v), veh/h	572	1050	538	441	1146	540	364	1108	547	244	1205	587
Grp Sat Flow(s),veh/h/ln	1721	1695	1736	1721	1695	1583	1721	1695	1672	1721	1695	1640
Q Serve(g_s), s	20.0	42.0	42.0	17.9	40.0	40.0	12.0	43.7	43.8	9.9	48.0	48.0
Cycle Q Clear(g_c), s	20.0	42.0	42.0	17.9	40.0	40.0	12.0	43.7	43.8	9.9	48.0	48.0
Prop In Lane	1.00		0.41	1.00		1.00	1.00		0.64	1.00		0.77
Lane Grp Cap(c), veh/h	492	1017	521	442	969	452	295	1211	597	246	1162	562
V/C Ratio(X)	1.16	1.03	1.03	1.00	1.18	1.19	1.23	0.91	0.92	0.99	1.04	1.04
Avail Cap(c_a), veh/h	492	1017	521	442	969	452	295	1211	597	246	1162	562
HCM Platoon Ratio	1.00	1.00	1.00	1.00	1.00	1.00	1.00	1.00	1.00	1.00	1.00	1.00
Upstream Filter(I)	1.00	1.00	1.00	1.00	1.00	1.00	1.00	1.00	1.00	1.00	1.00	1.00
Uniform Delay (d), s/veh	60.0	49.0	49.0	61.0	50.0	50.0	64.0	43.0	43.0	65.0	46.0	46.0
Incr Delay (d2), s/veh	93.9	36.9	48.2	41.8	93.0	107.1	131.1	12.1	21.2	55.1	36.4	49.7
Initial Q Delay(d3),s/veh	0.0	0.0	0.0	0.0	0.0	0.0	0.0	0.0	0.0	0.0	0.0	0.0
%ile BackOfQ(50%),veh/ln	15.9	24.8	27.1	11.1	31.2	30.9	11.1	22.5	23.7	6.6	28.3	29.5
LnGrp Delay(d),s/veh	153.9	85.9	97.2	102.8	143.0	157.1	195.1	55.1	64.2	120.1	82.4	95.7
LnGrp LOS	F	F	F	F	F	F	F	E	E	F	F	F
Approach Vol, veh/h		2160			2127			2019			2036	
Approach Delay, s/veh		106.7			138.3			82.8			90.8	
Approach LOS		F			F			F			F	

Timer	1	2	3	4	5	6	7	8
Assigned Phs	1	2	3	4	5	6	7	8
Phs Duration (G+Y+Rc), s	16.0	54.0	24.0	46.0	14.0	56.0	22.0	48.0
Change Period (Y+Rc), s	4.0	6.0	4.0	6.0	4.0	6.0	4.0	6.0
Max Green Setting (Gmax), s	12.0	48.0	20.0	40.0	10.0	50.0	18.0	42.0
Max Q Clear Time (g_c+I1), s	14.0	50.0	22.0	42.0	11.9	45.8	19.9	44.0
Green Ext Time (p_c), s	0.0	0.0	0.0	0.0	0.0	2.0	0.0	0.0

Intersection Summary	
HCM 2010 Ctrl Delay	105.1
HCM 2010 LOS	F

Movement	EBL	EBT	EBR	WBL	WBT	WBR	NBL	NBT	NBR	SBL	SBT	SBR
Lane Configurations												
Traffic Volume (veh/h)	249	1474	51	0	1482	276	219	89	9	107	35	221
Future Volume (veh/h)	249	1474	51	0	1482	276	219	89	9	107	35	221
Number	1	6	16	5	2	12	7	4	14	3	8	18
Initial Q (Qb), veh	0	0	0	0	0	0	0	0	0	0	0	0
Ped-Bike Adj(A_pbT)	1.00		1.00	1.00		1.00	1.00		1.00	1.00		1.00
Parking Bus, Adj	1.00	1.00	1.00	1.00	1.00	1.00	1.00	1.00	1.00	1.00	1.00	1.00
Adj Sat Flow, veh/h/ln	1863	1863	1900	0	1863	1900	1863	1863	1863	1863	1863	1863
Adj Flow Rate, veh/h	259	1535	53	0	1594	297	252	102	10	116	38	240
Adj No. of Lanes	1	2	0	0	2	0	1	1	1	1	1	1
Peak Hour Factor	0.96	0.96	0.96	0.93	0.93	0.93	0.87	0.87	0.87	0.92	0.92	0.92
Percent Heavy Veh, %	2	2	2	0	2	2	2	2	2	2	2	2
Cap, veh/h	365	4054	140	0	3261	591	185	254	216	118	228	255
Arrive On Green	0.04	1.00	1.00	0.00	1.00	1.00	0.08	0.14	0.14	0.07	0.12	0.12
Sat Flow, veh/h	1774	3491	120	0	3087	543	1774	1863	1583	1774	1863	1583
Grp Volume(v), veh/h	259	776	812	0	924	967	252	102	10	116	38	240
Grp Sat Flow(s),veh/h/ln	1774	1770	1842	0	1770	1767	1774	1863	1583	1774	1863	1583
Q Serve(g_s), s	0.0	0.0	0.0	0.0	0.0	0.0	13.5	9.0	1.0	11.8	3.3	22.0
Cycle Q Clear(g_c), s	0.0	0.0	0.0	0.0	0.0	0.0	13.5	9.0	1.0	11.8	3.3	22.0
Prop In Lane	1.00		0.07	0.00		0.31	1.00		1.00	1.00		1.00
Lane Grp Cap(c), veh/h	365	2055	2139	0	1927	1924	185	254	216	118	228	255
V/C Ratio(X)	0.71	0.38	0.38	0.00	0.48	0.50	1.36	0.40	0.05	0.98	0.17	0.94
Avail Cap(c_a), veh/h	523	2055	2139	0	1927	1924	185	254	216	118	228	255
HCM Platoon Ratio	1.00	1.00	1.00	1.00	1.00	1.00	1.00	1.00	1.00	1.00	1.00	1.00
Upstream Filter(I)	1.00	1.00	1.00	0.00	1.00	1.00	1.00	1.00	1.00	1.00	1.00	1.00
Uniform Delay (d), s/veh	1.0	0.0	0.0	0.0	0.0	0.0	81.3	71.1	67.6	83.9	70.8	222.2
Incr Delay (d2), s/veh	1.0	0.5	0.5	0.0	0.9	0.9	193.0	4.7	0.4	76.3	1.6	42.9
Initial Q Delay(d3),s/veh	0.0	0.0	0.0	0.0	0.0	0.0	0.0	0.0	0.0	0.0	0.0	0.0
%ile BackOfQ(50%),veh/ln	4.5	0.3	0.3	0.0	0.5	0.5	19.1	5.0	0.5	8.3	1.8	32.5
LnGrp Delay(d),s/veh	1.9	0.5	0.5	0.0	0.9	0.9	274.3	75.8	68.0	160.2	72.4	265.1
LnGrp LOS	A	A	A		A	A	F	E	E	F	E	F
Approach Vol, veh/h		1847			1891			364			394	
Approach Delay, s/veh		0.7			0.9			213.0			215.6	
Approach LOS		A			A			F			F	

Timer	1	2	3	4	5	6	7	8
Assigned Phs	1	2	3	4		6	7	8
Phs Duration (G+Y+Rc), s	13.0	204.5	18.0	31.5		217.5	20.5	29.0
Change Period (Y+Rc), s	6.0	6.0	6.0	7.0		6.0	7.0	* 7
Max Green Setting (Gmax), s	23.0	98.0	12.0	22.0		127.0	13.5	* 22
Max Q Clear Time (g_c+I1), s	2.0	2.0	13.8	11.0		2.0	15.5	24.0
Green Ext Time (p_c), s	0.3	5.5	0.0	0.3		3.8	0.0	0.0

Intersection Summary	
HCM 2010 Ctrl Delay	36.8
HCM 2010 LOS	D

Notes

* HCM 2010 computational engine requires equal clearance times for the phases crossing the barrier.

Intersection	
Int Delay, s/veh	24.8

Movement	EBL	EBT	EBR	WBL	WBT	WBR	NBL	NBT	NBR	SBL	SBT	SBR
Lane Configurations												
Traffic Vol, veh/h	21	1323	246	77	1656	34	0	0	390	0	0	102
Future Vol, veh/h	21	1323	246	77	1656	34	0	0	390	0	0	102
Conflicting Peds, #/hr	0	0	0	0	0	0	0	0	0	0	0	0
Sign Control	Free	Free	Free	Free	Free	Free	Stop	Stop	Stop	Stop	Stop	Stop
RT Channelized	-	-	None	-	-	None	-	-	None	-	-	None
Storage Length	-	-	-	300	-	-	-	-	0	-	-	0
Veh in Median Storage, #	-	0	-	-	0	-	-	0	-	-	0	-
Grade, %	-	0	-	-	0	-	-	0	-	-	0	-
Peak Hour Factor	92	92	92	92	92	92	92	92	92	92	92	92
Heavy Vehicles, %	2	2	2	2	2	2	2	2	2	2	2	2
Mvmt Flow	23	1438	267	84	1800	37	0	0	424	0	0	111

Major/Minor	Major1			Major2			Minor1			Minor2		
Conflicting Flow All	1837	0	0	1705	0	0	-	-	853	-	-	919
Stage 1	-	-	-	-	-	-	-	-	-	-	-	-
Stage 2	-	-	-	-	-	-	-	-	-	-	-	-
Critical Hdwy	4.14	-	-	4.14	-	-	-	-	6.94	-	-	6.94
Critical Hdwy Stg 1	-	-	-	-	-	-	-	-	-	-	-	-
Critical Hdwy Stg 2	-	-	-	-	-	-	-	-	-	-	-	-
Follow-up Hdwy	2.22	-	-	2.22	-	-	-	-	3.32	-	-	3.32
Pot Cap-1 Maneuver	328	-	-	369	-	-	0	0	~ 302	0	0	273
Stage 1	-	-	-	-	-	-	0	0	-	0	0	-
Stage 2	-	-	-	-	-	-	0	0	-	0	0	-
Platoon blocked, %		-	-		-	-						
Mov Cap-1 Maneuver	328	-	-	369	-	-	-	-	~ 302	-	-	273
Mov Cap-2 Maneuver	-	-	-	-	-	-	-	-	-	-	-	-
Stage 1	-	-	-	-	-	-	-	-	-	-	-	-
Stage 2	-	-	-	-	-	-	-	-	-	-	-	-

Approach	EB	WB	NB	SB
HCM Control Delay, s	0.2	0.8	233.4	26.9
HCM LOS			F	D

Minor Lane/Major Mvmt	NBLn1	EBL	EBT	EBR	WBL	WBT	WBR	SBLn1
Capacity (veh/h)	302	328	-	-	369	-	-	273
HCM Lane V/C Ratio	1.404	0.07	-	-	0.227	-	-	0.406
HCM Control Delay (s)	233.4	16.8	-	-	17.6	-	-	26.9
HCM Lane LOS	F	C	-	-	C	-	-	D
HCM 95th %tile Q(veh)	22.4	0.2	-	-	0.9	-	-	1.9

Notes			
~: Volume exceeds capacity	$: Delay exceeds 300s	+: Computation Not Defined	*: All major volume in platoon

Intersection	
Int Delay, s/veh	216.9

Movement	EBT	EBR	WBL	WBT	NBL	NBR
Lane Configurations						
Traffic Vol, veh/h	1579	134	91	1649	118	146
Future Vol, veh/h	1579	134	91	1649	118	146
Conflicting Peds, #/hr	0	0	0	0	0	0
Sign Control	Free	Free	Free	Free	Stop	Stop
RT Channelized	-	None	-	None	-	None
Storage Length	-	-	200	-	0	0
Veh in Median Storage, #	0	-	-	0	0	-
Grade, %	0	-	-	0	0	-
Peak Hour Factor	92	92	92	92	92	92
Heavy Vehicles, %	2	2	2	2	2	2
Mvmt Flow	1716	146	99	1792	128	159

Major/Minor	Major1		Major2		Minor1	
Conflicting Flow All	0	0	1862	0	2883	931
Stage 1	-	-	-	-	1789	-
Stage 2	-	-	-	-	1094	-
Critical Hdwy	-	-	4.14	-	6.84	6.94
Critical Hdwy Stg 1	-	-	-	-	5.84	-
Critical Hdwy Stg 2	-	-	-	-	5.84	-
Follow-up Hdwy	-	-	2.22	-	3.52	3.32
Pot Cap-1 Maneuver	-	-	320	-	~ 13	268
Stage 1	-	-	-	-	~ 119	-
Stage 2	-	-	-	-	282	-
Platoon blocked, %	-	-		-		
Mov Cap-1 Maneuver	-	-	320	-	~ 9	268
Mov Cap-2 Maneuver	-	-	-	-	~ 9	-
Stage 1	-	-	-	-	~ 119	-
Stage 2	-	-	-	-	195	-

Approach	EB	WB	NB
HCM Control Delay, s	0	1.1	$ 3046.5
HCM LOS			F

Minor Lane/Major Mvmt	NBLn1	NBLn2	EBT	EBR	WBL	WBT
Capacity (veh/h)	9	268	-	-	320	-
HCM Lane V/C Ratio	14.251	0.592	-	-	0.309	-
HCM Control Delay (s)	$ 6771	36.2	-	-	21.2	-
HCM Lane LOS	F	E	-	-	C	-
HCM 95th %tile Q(veh)	17.6	3.5	-	-	1.3	-

Notes			
~: Volume exceeds capacity	$: Delay exceeds 300s	+: Computation Not Defined	*: All major volume in platoon

Movement	EBL	EBT	EBR	WBL	WBT	WBR	NBL	NBT	NBR	SBL	SBT	SBR
Lane Configurations												
Traffic Volume (veh/h)	453	930	342	315	854	729	575	1879	534	409	1451	311
Future Volume (veh/h)	453	930	342	315	854	729	575	1879	534	409	1451	311
Number	3	8	18	7	4	14	1	6	16	5	2	12
Initial Q (Qb), veh	0	0	0	0	0	0	0	0	0	0	0	0
Ped-Bike Adj(A_pbT)	1.00		1.00	1.00		1.00	1.00		1.00	1.00		1.00
Parking Bus, Adj	1.00	1.00	1.00	1.00	1.00	1.00	1.00	1.00	1.00	1.00	1.00	1.00
Adj Sat Flow, veh/h/ln	1863	1863	1863	1863	1863	1863	1863	1863	1900	1863	1863	1900
Adj Flow Rate, veh/h	487	1000	368	328	890	759	618	2020	574	440	1560	334
Adj No. of Lanes	2	3	1	2	3	1	2	3	0	2	3	0
Peak Hour Factor	0.93	0.93	0.93	0.96	0.96	0.96	0.93	0.93	0.93	0.93	0.93	0.93
Percent Heavy Veh, %	2	2	2	2	2	2	2	2	2	2	2	2
Cap, veh/h	396	915	585	293	788	522	652	1755	473	602	1809	385
Arrive On Green	0.12	0.18	0.18	0.09	0.16	0.16	0.19	0.44	0.44	0.18	0.43	0.43
Sat Flow, veh/h	3442	5085	1583	3442	5085	1583	3442	3989	1074	3442	4201	894
Grp Volume(v), veh/h	487	1000	368	328	890	759	618	1700	894	440	1257	637
Grp Sat Flow(s),veh/h/ln	1721	1695	1583	1721	1695	1583	1721	1695	1673	1721	1695	1705
Q Serve(g_s), s	23.0	36.0	27.9	17.0	31.0	25.1	35.5	88.0	88.0	24.2	67.1	67.9
Cycle Q Clear(g_c), s	23.0	36.0	27.9	17.0	31.0	25.1	35.5	88.0	88.0	24.2	67.1	67.9
Prop In Lane	1.00		1.00	1.00		1.00	1.00		0.64	1.00		0.52
Lane Grp Cap(c), veh/h	396	915	585	293	788	523	652	1492	736	602	1460	734
V/C Ratio(X)	1.23	1.09	0.63	1.12	1.13	1.45	0.95	1.14	1.21	0.73	0.86	0.87
Avail Cap(c_a), veh/h	396	915	585	293	788	523	688	1492	736	637	1460	734
HCM Platoon Ratio	1.00	1.00	1.00	1.00	1.00	1.00	1.00	1.00	1.00	1.00	1.00	1.00
Upstream Filter(I)	1.00	1.00	1.00	1.00	1.00	1.00	1.00	1.00	1.00	1.00	1.00	1.00
Uniform Delay (d), s/veh	88.5	82.0	29.4	91.5	84.5	40.7	80.1	56.0	56.0	78.0	51.5	51.8
Incr Delay (d2), s/veh	124.0	58.2	1.9	89.3	73.8	214.2	21.3	71.5	108.7	3.4	6.9	13.2
Initial Q Delay(d3),s/veh	0.0	0.0	0.0	0.0	0.0	0.0	0.0	0.0	0.0	0.0	0.0	0.0
%ile BackOfQ(50%),veh/ln	17.8	21.8	12.5	11.7	19.9	55.5	18.8	56.0	62.9	11.8	32.8	34.7
LnGrp Delay(d),s/veh	212.5	140.2	31.3	180.8	158.3	254.9	101.4	127.5	164.7	81.4	58.4	64.9
LnGrp LOS	F	F	C	F	F	F	F	F	F	F	E	E
Approach Vol, veh/h		1855			1977			3212			2334	
Approach Delay, s/veh		137.6			199.1			132.8			64.5	
Approach LOS		F			F			F			E	

Timer	1	2	3	4	5	6	7	8
Assigned Phs	1	2	3	4	5	6	7	8
Phs Duration (G+Y+Rc), s	42.9	92.1	28.0	37.0	41.0	94.0	23.0	42.0
Change Period (Y+Rc), s	5.0	6.0	5.0	6.0	6.0	* 6	6.0	* 6
Max Green Setting (Gmax), s	40.0	85.0	23.0	30.0	37.0	* 88	17.0	* 36
Max Q Clear Time (g_c+I1), s	37.5	69.9	25.0	33.0	26.2	90.0	19.0	38.0
Green Ext Time (p_c), s	0.4	4.5	0.0	0.0	0.6	0.0	0.0	0.0

Intersection Summary	
HCM 2010 Ctrl Delay	130.8
HCM 2010 LOS	F

Notes

* HCM 2010 computational engine requires equal clearance times for the phases crossing the barrier.

Build 2020

Movement	EBL	EBT	EBR	WBL	WBT	WBR	NBL	NBT	NBR	SBL	SBT	SBR
Lane Configurations												
Traffic Volume (veh/h)	289	547	426	215	2038	49	744	362	150	95	307	619
Future Volume (veh/h)	289	547	426	215	2038	49	744	362	150	95	307	619
Number	1	6	16	5	2	12	7	4	14	3	8	18
Initial Q (Qb), veh	0	0	0	0	0	0	0	0	0	0	0	0
Ped-Bike Adj(A_pbT)	1.00		1.00	1.00		1.00	1.00		1.00	1.00		1.00
Parking Bus, Adj	1.00	1.00	1.00	1.00	1.00	1.00	1.00	1.00	1.00	1.00	1.00	1.00
Adj Sat Flow, veh/h/ln	1863	1863	1863	1863	1863	1900	1863	1863	1900	1863	1863	1863
Adj Flow Rate, veh/h	314	595	463	226	2145	52	800	389	161	103	334	673
Adj No. of Lanes	2	3	2	2	3	0	2	2	0	1	2	2
Peak Hour Factor	0.92	0.92	0.92	0.95	0.95	0.95	0.93	0.93	0.93	0.92	0.92	0.92
Percent Heavy Veh, %	2	2	2	2	2	2	2	2	2	2	2	2
Cap, veh/h	382	2684	2059	683	2327	56	841	709	290	257	492	712
Arrive On Green	0.11	0.53	0.53	0.04	0.46	0.44	0.21	0.29	0.27	0.06	0.14	0.14
Sat Flow, veh/h	3442	5085	2787	3442	5108	124	3442	2453	1002	1774	3539	2787
Grp Volume(v), veh/h	314	595	463	226	1422	775	800	279	271	103	334	673
Grp Sat Flow(s),veh/h/ln	1721	1695	1393	1721	1695	1841	1721	1770	1686	1774	1770	1393
Q Serve(g_s), s	16.1	11.3	9.4	6.4	70.8	71.2	35.1	24.0	24.7	8.9	16.2	25.0
Cycle Q Clear(g_c), s	16.1	11.3	9.4	6.4	70.8	71.2	35.1	24.0	24.7	8.9	16.2	25.0
Prop In Lane	1.00		1.00	1.00		0.07	1.00		0.59	1.00		1.00
Lane Grp Cap(c), veh/h	382	2684	2059	683	1544	839	841	511	487	257	492	712
V/C Ratio(X)	0.82	0.22	0.22	0.33	0.92	0.92	0.95	0.55	0.56	0.40	0.68	0.95
Avail Cap(c_a), veh/h	382	2684	2059	683	1544	839	841	511	487	257	492	712
HCM Platoon Ratio	1.00	1.00	1.00	1.00	1.00	1.00	1.00	1.00	1.00	1.00	1.00	1.00
Upstream Filter(I)	1.00	1.00	1.00	1.00	1.00	1.00	1.00	1.00	1.00	1.00	1.00	1.00
Uniform Delay (d), s/veh	78.3	22.7	7.4	24.6	46.0	46.1	50.4	54.0	55.0	62.0	73.7	65.8
Incr Delay (d2), s/veh	13.3	0.2	0.3	0.1	10.5	17.3	20.0	4.2	4.5	0.4	7.4	22.7
Initial Q Delay(d3),s/veh	0.0	0.0	0.0	0.0	0.0	0.0	0.0	0.0	0.0	0.0	0.0	0.0
%ile BackOfQ(50%),veh/ln	8.3	5.3	3.7	3.0	35.4	40.2	18.9	12.3	12.1	4.4	8.4	18.7
LnGrp Delay(d),s/veh	91.6	22.9	7.6	24.7	56.4	63.4	70.4	58.2	59.6	62.4	81.1	88.4
LnGrp LOS	F	C	A	C	E	E	E	E	E	E	F	F
Approach Vol, veh/h		1372			2423			1350			1110	
Approach Delay, s/veh		33.5			55.7			65.7			83.8	
Approach LOS		C			E			E			F	

Timer	1	2	3	4	5	6	7	8
Assigned Phs	1	2	3	4	5	6	7	8
Phs Duration (G+Y+Rc), s	24.0	86.0	14.0	56.0	11.0	99.0	41.0	29.0
Change Period (Y+Rc), s	6.0	6.0	7.0	7.0	6.0	6.0	7.0	7.0
Max Green Setting (Gmax), s	18.0	80.0	7.0	49.0	5.0	93.0	34.0	22.0
Max Q Clear Time (g_c+I1), s	18.1	73.2	10.9	26.7	8.4	13.3	37.1	27.0
Green Ext Time (p_c), s	0.0	3.7	0.0	2.8	0.0	1.8	0.0	0.0

Intersection Summary	
HCM 2010 Ctrl Delay	58.0
HCM 2010 LOS	E

Intersection	
Int Delay, s/veh	2.5

Movement	EBL	EBT	WBT	WBR	SBL	SBR
Lane Configurations						
Traffic Vol, veh/h	0	792	2200	20	0	102
Future Vol, veh/h	0	792	2200	20	0	102
Conflicting Peds, #/hr	0	0	0	0	0	0
Sign Control	Free	Free	Free	Free	Stop	Stop
RT Channelized	-	None	-	None	-	None
Storage Length	-	-	-	-	-	0
Veh in Median Storage, #	-	0	0	-	0	-
Grade, %	-	0	0	-	0	-
Peak Hour Factor	92	92	92	92	92	92
Heavy Vehicles, %	2	2	2	2	2	2
Mvmt Flow	0	861	2391	22	0	111

Major/Minor	Major1		Major2		Minor2	
Conflicting Flow All	-	0	-	0	-	1207
Stage 1	-	-	-	-	-	-
Stage 2	-	-	-	-	-	-
Critical Hdwy	-	-	-	-	-	7.14
Critical Hdwy Stg 1	-	-	-	-	-	-
Critical Hdwy Stg 2	-	-	-	-	-	-
Follow-up Hdwy	-	-	-	-	-	3.92
Pot Cap-1 Maneuver	0	-	-	-	0	151
Stage 1	0	-	-	-	0	-
Stage 2	0	-	-	-	0	-
Platoon blocked, %		-	-	-		
Mov Cap-1 Maneuver	-	-	-	-	-	151
Mov Cap-2 Maneuver	-	-	-	-	-	-
Stage 1	-	-	-	-	-	-
Stage 2	-	-	-	-	-	-

Approach	EB	WB	SB
HCM Control Delay, s	0	0	76.1
HCM LOS			F

Minor Lane/Major Mvmt	EBT	WBT	WBR	SBLn1
Capacity (veh/h)	-	-	-	151
HCM Lane V/C Ratio	-	-	-	0.734
HCM Control Delay (s)	-	-	-	76.1
HCM Lane LOS	-	-	-	F
HCM 95th %tile Q(veh)	-	-	-	4.4

Intersection	
Int Delay, s/veh	6.8

Movement	EBT	EBR	WBL	WBT	NBL	NBR
Lane Configurations						
Traffic Vol, veh/h	792	0	0	2099	121	60
Future Vol, veh/h	792	0	0	2099	121	60
Conflicting Peds, #/hr	0	0	0	0	0	0
Sign Control	Free	Free	Free	Free	Stop	Stop
RT Channelized	-	None	-	None	-	None
Storage Length	-	-	-	-	0	50
Veh in Median Storage, #	0	-	-	0	0	-
Grade, %	0	-	-	0	0	-
Peak Hour Factor	92	92	92	92	92	92
Heavy Vehicles, %	2	2	2	2	2	2
Mvmt Flow	861	0	0	2282	132	65

Major/Minor	Major1		Major2		Minor1	
Conflicting Flow All	0	-	-	-	1774	431
Stage 1	-	-	-	-	861	-
Stage 2	-	-	-	-	913	-
Critical Hdwy	-	-	-	-	5.74	7.14
Critical Hdwy Stg 1	-	-	-	-	6.64	-
Critical Hdwy Stg 2	-	-	-	-	6.04	-
Follow-up Hdwy	-	-	-	-	3.82	3.92
Pot Cap-1 Maneuver	-	0	0	-	~ 124	489
Stage 1	-	0	0	-	294	-
Stage 2	-	0	0	-	318	-
Platoon blocked, %	-			-		
Mov Cap-1 Maneuver	-	-	-	-	~ 124	489
Mov Cap-2 Maneuver	-	-	-	-	~ 124	-
Stage 1	-	-	-	-	294	-
Stage 2	-	-	-	-	318	-

Approach	EB	WB	NB
HCM Control Delay, s	0	0	115.6
HCM LOS			F

Minor Lane/Major Mvmt	NBLn1	NBLn2	EBT	WBT
Capacity (veh/h)	124	489	-	-
HCM Lane V/C Ratio	1.061	0.133	-	-
HCM Control Delay (s)	166.2	13.5	-	-
HCM Lane LOS	F	B	-	-
HCM 95th %tile Q(veh)	7.5	0.5	-	-

Notes			
~: Volume exceeds capacity	$: Delay exceeds 300s	+: Computation Not Defined	*: All major volume in platoon

Intersection	
Int Delay, s/veh	0.1

Movement	EBL	EBT	WBT	WBR	SBL	SBR
Lane Configurations						
Traffic Vol, veh/h	0	852	2086	2	0	13
Future Vol, veh/h	0	852	2086	2	0	13
Conflicting Peds, #/hr	0	0	0	0	0	0
Sign Control	Free	Free	Free	Free	Stop	Stop
RT Channelized	-	None	-	None	-	None
Storage Length	-	-	-	-	-	0
Veh in Median Storage, #	-	0	0	-	0	-
Grade, %	-	0	0	-	0	-
Peak Hour Factor	92	92	92	92	92	92
Heavy Vehicles, %	2	2	2	2	2	2
Mvmt Flow	0	926	2267	2	0	14

Major/Minor	Major1		Major2		Minor2	
Conflicting Flow All	-	0	-	0	-	1135
Stage 1	-	-	-	-	-	-
Stage 2	-	-	-	-	-	-
Critical Hdwy	-	-	-	-	-	7.14
Critical Hdwy Stg 1	-	-	-	-	-	-
Critical Hdwy Stg 2	-	-	-	-	-	-
Follow-up Hdwy	-	-	-	-	-	3.92
Pot Cap-1 Maneuver	0	-	-	-	0	168
Stage 1	0	-	-	-	0	-
Stage 2	0	-	-	-	0	-
Platoon blocked, %		-	-	-		
Mov Cap-1 Maneuver	-	-	-	-	-	168
Mov Cap-2 Maneuver	-	-	-	-	-	-
Stage 1	-	-	-	-	-	-
Stage 2	-	-	-	-	-	-

Approach	EB	WB	SB
HCM Control Delay, s	0	0	28.4
HCM LOS			D

Minor Lane/Major Mvmt	EBT	WBT	WBR	SBLn1
Capacity (veh/h)	-	-	-	168
HCM Lane V/C Ratio	-	-	-	0.084
HCM Control Delay (s)	-	-	-	28.4
HCM Lane LOS	-	-	-	D
HCM 95th %tile Q(veh)	-	-	-	0.3

Movement	EBL	EBT	EBR	WBL	WBT	WBR	NBL	NBT	NBR	SBL	SBT	SBR
Lane Configurations												
Traffic Volume (veh/h)	111	619	122	228	1597	143	306	82	120	136	201	185
Future Volume (veh/h)	111	619	122	228	1597	143	306	82	120	136	201	185
Number	1	6	16	5	2	12	7	4	14	3	8	18
Initial Q (Qb), veh	0	0	0	0	0	0	0	0	0	0	0	0
Ped-Bike Adj(A_pbT)	1.00		1.00	1.00		1.00	1.00		1.00	1.00		1.00
Parking Bus, Adj	1.00	1.00	1.00	1.00	1.00	1.00	1.00	1.00	1.00	1.00	1.00	1.00
Adj Sat Flow, veh/h/ln	1863	1863	1900	1863	1863	1900	1863	1863	1863	1863	1863	1863
Adj Flow Rate, veh/h	125	696	137	253	1774	159	382	102	150	164	242	223
Adj No. of Lanes	1	3	0	1	3	0	1	1	1	1	1	1
Peak Hour Factor	0.89	0.89	0.89	0.90	0.90	0.90	0.80	0.80	0.80	0.83	0.83	0.83
Percent Heavy Veh, %	2	2	2	2	2	2	2	2	2	2	2	2
Cap, veh/h	230	1946	379	427	2375	212	401	524	446	332	299	254
Arrive On Green	0.05	0.46	0.45	0.18	1.00	0.99	0.19	0.28	0.28	0.07	0.16	0.16
Sat Flow, veh/h	1774	4274	832	1774	4753	425	1774	1863	1583	1774	1863	1583
Grp Volume(v), veh/h	125	550	283	253	1264	669	382	102	150	164	242	223
Grp Sat Flow(s),veh/h/ln	1774	1695	1716	1774	1695	1788	1774	1863	1583	1774	1863	1583
Q Serve(g_s), s	5.8	15.8	16.2	12.3	0.1	0.8	26.8	6.2	11.3	10.0	18.8	20.6
Cycle Q Clear(g_c), s	5.8	15.8	16.2	12.3	0.1	0.8	26.8	6.2	11.3	10.0	18.8	20.6
Prop In Lane	1.00		0.48	1.00		0.24	1.00		1.00	1.00		1.00
Lane Grp Cap(c), veh/h	230	1543	781	427	1694	893	401	524	446	332	299	254
V/C Ratio(X)	0.54	0.36	0.36	0.59	0.75	0.75	0.95	0.19	0.34	0.49	0.81	0.88
Avail Cap(c_a), veh/h	279	1543	781	539	1694	893	447	596	507	332	323	274
HCM Platoon Ratio	1.00	1.00	1.00	2.00	2.00	2.00	1.00	1.00	1.00	1.00	1.00	1.00
Upstream Filter(I)	1.00	1.00	1.00	0.50	0.50	0.50	1.00	1.00	1.00	1.00	1.00	1.00
Uniform Delay (d), s/veh	21.2	26.6	26.8	18.0	0.0	0.1	42.5	41.0	42.8	51.1	60.7	61.5
Incr Delay (d2), s/veh	0.7	0.6	1.3	0.2	1.5	2.9	28.5	0.1	0.3	0.4	12.8	24.0
Initial Q Delay(d3),s/veh	0.0	0.0	0.0	0.0	0.0	0.0	0.0	0.0	0.0	0.0	0.0	0.0
%ile BackOfQ(50%),veh/ln	2.9	7.6	7.9	5.9	0.4	0.8	16.2	3.2	5.0	5.8	10.7	10.7
LnGrp Delay(d),s/veh	21.9	27.2	28.1	18.3	1.6	3.1	70.9	41.1	43.1	51.6	73.5	85.5
LnGrp LOS	C	C	C	B	A	A	E	D	D	D	E	F
Approach Vol, veh/h		958			2186			634			629	
Approach Delay, s/veh		26.8			3.9			59.6			72.1	
Approach LOS		C			A			E			E	

Timer	1	2	3	4	5	6	7	8
Assigned Phs	1	2	3	4	5	6	7	8
Phs Duration (G+Y+Rc), s	10.8	79.0	14.0	46.2	17.5	72.3	32.1	28.1
Change Period (Y+Rc), s	3.0	5.0	3.0	5.0	3.0	5.0	3.0	5.0
Max Green Setting (Gmax), s	12.0	64.0	11.0	47.0	24.0	52.0	33.0	25.0
Max Q Clear Time (g_c+I1), s	7.8	2.8	12.0	13.3	14.3	18.2	28.8	22.6
Green Ext Time (p_c), s	0.1	5.7	0.0	0.8	0.2	1.9	0.3	0.5

Intersection Summary	
HCM 2010 Ctrl Delay	26.6
HCM 2010 LOS	C

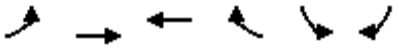

Movement	EBL	EBT	WBT	WBR	SBL	SBR
Lane Configurations						
Traffic Volume (veh/h)	111	764	1721	397	391	239
Future Volume (veh/h)	111	764	1721	397	391	239
Number	1	6	2	12	3	18
Initial Q (Qb), veh	0	0	0	0	0	0
Ped-Bike Adj(A_pbT)	1.00			1.00	1.00	1.00
Parking Bus, Adj	1.00	1.00	1.00	1.00	1.00	1.00
Adj Sat Flow, veh/h/ln	1863	1863	1863	1900	1863	1863
Adj Flow Rate, veh/h	128	878	1934	446	407	249
Adj No. of Lanes	1	3	3	0	1	1
Peak Hour Factor	0.87	0.87	0.89	0.89	0.96	0.96
Percent Heavy Veh, %	2	2	2	2	2	2
Cap, veh/h	278	3540	2217	497	445	570
Arrive On Green	0.25	1.00	0.53	0.53	0.25	0.24
Sat Flow, veh/h	1774	5253	4325	931	1774	1583
Grp Volume(v), veh/h	128	878	1567	813	407	249
Grp Sat Flow(s),veh/h/ln	1774	1695	1695	1698	1774	1583
Q Serve(g_s), s	3.6	0.0	60.1	64.4	33.5	0.0
Cycle Q Clear(g_c), s	3.6	0.0	60.1	64.4	33.5	0.0
Prop In Lane	1.00			0.55	1.00	1.00
Lane Grp Cap(c), veh/h	278	3540	1808	906	445	570
V/C Ratio(X)	0.46	0.25	0.87	0.90	0.92	0.44
Avail Cap(c_a), veh/h	278	3540	1808	906	520	638
HCM Platoon Ratio	2.00	2.00	1.00	1.00	1.00	1.00
Upstream Filter(I)	0.93	0.93	1.00	1.00	1.00	1.00
Uniform Delay (d), s/veh	49.6	0.0	30.4	31.6	54.7	36.5
Incr Delay (d2), s/veh	0.8	0.2	5.9	13.5	18.6	0.4
Initial Q Delay(d3),s/veh	0.0	0.0	0.0	0.0	0.0	0.0
%ile BackOfQ(50%),veh/ln	4.3	0.1	29.5	33.5	18.7	7.9
LnGrp Delay(d),s/veh	50.4	0.2	36.2	45.1	73.3	36.8
LnGrp LOS	D	A	D	D	E	D
Approach Vol, veh/h		1006	2380		656	
Approach Delay, s/veh		6.5	39.3		59.5	
Approach LOS		A	D		E	

Timer	1	2	3	4	5	6	7	8
Assigned Phs	1	2				6		8
Phs Duration (G+Y+Rc), s	24.4	84.0				108.4		41.6
Change Period (Y+Rc), s	5.0	* 5				5.0		5.0
Max Green Setting (Gmax), s	15.6	* 79				97.0		43.0
Max Q Clear Time (g_c+I1), s	5.6	66.4				2.0		35.5
Green Ext Time (p_c), s	0.1	6.0				2.3		1.1

Intersection Summary	
HCM 2010 Ctrl Delay	34.4
HCM 2010 LOS	C

Notes

* HCM 2010 computational engine requires equal clearance times for the phases crossing the barrier.

Intersection	
Int Delay, s/veh	4.2

Movement	EBL	EBT	EBR	WBL	WBT	WBR	NBL	NBT	NBR	SBL	SBT	SBR
Lane Configurations												
Traffic Vol, veh/h	0	1155	0	0	1966	6	0	0	0	0	0	152
Future Vol, veh/h	0	1155	0	0	1966	6	0	0	0	0	0	152
Conflicting Peds, #/hr	0	0	0	0	0	0	0	0	0	0	0	0
Sign Control	Free	Free	Free	Free	Free	Free	Stop	Stop	Stop	Stop	Stop	Stop
RT Channelized	-	-	None	-	-	None	-	-	None	-	-	None
Storage Length	-	-	-	75	-	-	-	-	-	-	-	0
Veh in Median Storage, #	-	0	-	-	0	-	-	-	-	-	0	-
Grade, %	-	0	-	-	0	-	-	0	-	-	0	-
Peak Hour Factor	92	92	92	92	92	92	92	92	92	92	92	92
Heavy Vehicles, %	2	2	2	2	2	2	2	2	2	2	2	2
Mvmt Flow	0	1255	0	0	2137	7	0	0	0	0	0	165

Major/Minor	Major1			Major2					Minor2		
Conflicting Flow All	-	0	-	1255	0	0			-	-	1072
Stage 1	-	-	-	-	-	-			-	-	-
Stage 2	-	-	-	-	-	-			-	-	-
Critical Hdwy	-	-	-	5.34	-	-			-	-	7.14
Critical Hdwy Stg 1	-	-	-	-	-	-			-	-	-
Critical Hdwy Stg 2	-	-	-	-	-	-			-	-	-
Follow-up Hdwy	-	-	-	3.12	-	-			-	-	3.92
Pot Cap-1 Maneuver	0	-	0	294	-	-			0	0	186
Stage 1	0	-	0	-	-	-			0	0	-
Stage 2	0	-	0	-	-	-			0	0	-
Platoon blocked, %		-			-	-					
Mov Cap-1 Maneuver	-	-	-	294	-	-			-	0	186
Mov Cap-2 Maneuver	-	-	-	-	-	-			-	0	-
Stage 1	-	-	-	-	-	-			-	0	-
Stage 2	-	-	-	-	-	-			-	0	-

Approach	EB	WB	SB
HCM Control Delay, s	0	0	90.7
HCM LOS			F

Minor Lane/Major Mvmt	EBT	WBL	WBT	WBR	SBLn1
Capacity (veh/h)	-	294	-	-	186
HCM Lane V/C Ratio	-	-	-	-	0.888
HCM Control Delay (s)	-	0	-	-	90.7
HCM Lane LOS	-	A	-	-	F
HCM 95th %tile Q(veh)	-	0	-	-	6.7

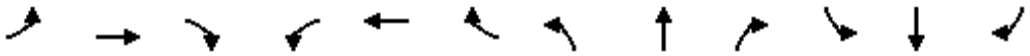

Movement	EBL	EBT	EBR	WBL	WBT	WBR	NBL	NBT	NBR	SBL	SBT	SBR
Lane Configurations												
Traffic Volume (vph)	89	1030	45	11	1780	25	124	5	24	58	25	68
Future Volume (vph)	89	1030	45	11	1780	25	124	5	24	58	25	68
Ideal Flow (vphpl)	1900	1900	1900	1900	1900	1900	1900	1900	1900	1900	1900	1900
Total Lost time (s)	4.0	4.0		4.0	4.0			4.0	4.0		4.0	4.0
Lane Util. Factor	1.00	0.91		1.00	0.91			1.00	1.00		1.00	1.00
Frt	1.00	0.99		1.00	1.00			1.00	0.85		1.00	0.85
Flt Protected	0.95	1.00		0.95	1.00			0.95	1.00		0.97	1.00
Satd. Flow (prot)	1770	5053		1770	5075			1777	1583		1800	1583
Flt Permitted	0.06	1.00		0.18	1.00			0.95	1.00		0.97	1.00
Satd. Flow (perm)	112	5053		334	5075			1777	1583		1800	1583
Peak-hour factor, PHF	0.88	0.88	0.88	0.95	0.95	0.95	0.77	0.77	0.77	0.55	0.55	0.55
Adj. Flow (vph)	101	1170	51	12	1874	26	161	6	31	105	45	124
RTOR Reduction (vph)	0	2	0	0	1	0	0	0	27	0	0	109
Lane Group Flow (vph)	101	1219	0	12	1899	0	0	167	4	0	150	15
Turn Type	pm+pt	NA		pm+pt	NA		Split	NA	Perm	Split	NA	Perm
Protected Phases	1	6		5	2		4	4		3	3	
Permitted Phases	6			2					4			3
Actuated Green, G (s)	119.7	111.7		101.6	99.6			21.1	21.1		19.2	19.2
Effective Green, g (s)	121.7	113.7		105.6	101.6			24.1	24.1		22.2	22.2
Actuated g/C Ratio	0.68	0.63		0.59	0.56			0.13	0.13		0.12	0.12
Clearance Time (s)	6.0	6.0		6.0	6.0			7.0	7.0		7.0	7.0
Vehicle Extension (s)	3.0	1.0		3.0	1.0			2.5	2.5		2.5	2.5
Lane Grp Cap (vph)	224	3191		227	2864			237	211		222	195
v/s Ratio Prot	c0.04	0.24		0.00	c0.37			c0.09			c0.08	
v/s Ratio Perm	0.26			0.03					0.00			0.01
v/c Ratio	0.45	0.38		0.05	0.66			0.70	0.02		0.68	0.08
Uniform Delay, d1	47.8	16.1		24.4	27.3			74.5	67.7		75.5	69.8
Progression Factor	1.00	1.00		1.00	1.00			1.00	1.00		1.00	1.00
Incremental Delay, d2	1.4	0.3		0.1	1.2			8.5	0.0		7.2	0.1
Delay (s)	49.2	16.4		24.5	28.5			83.1	67.7		82.6	70.0
Level of Service	D	B		C	C			F	E		F	E
Approach Delay (s)		18.9			28.5			80.7			76.9	
Approach LOS		B			C			F			E	

Intersection Summary			
HCM 2000 Control Delay	31.5	HCM 2000 Level of Service	C
HCM 2000 Volume to Capacity ratio	0.65		
Actuated Cycle Length (s)	180.0	Sum of lost time (s)	16.0
Intersection Capacity Utilization	63.7%	ICU Level of Service	B
Analysis Period (min)	15		

c Critical Lane Group

Movement	EBT	EBR	WBL	WBT	NBL	NBR
Lane Configurations						
Traffic Volume (veh/h)	936	167	366	1623	193	183
Future Volume (veh/h)	936	167	366	1623	193	183
Number	6	16	5	2	7	14
Initial Q (Qb), veh	0	0	0	0	0	0
Ped-Bike Adj(A_pbT)		1.00	1.00		1.00	1.00
Parking Bus, Adj	1.00	1.00	1.00	1.00	1.00	1.00
Adj Sat Flow, veh/h/ln	1863	1900	1863	1863	1863	1863
Adj Flow Rate, veh/h	1101	196	377	1673	219	208
Adj No. of Lanes	3	0	1	3	1	1
Peak Hour Factor	0.85	0.85	0.97	0.97	0.88	0.88
Percent Heavy Veh, %	2	2	2	2	2	2
Cap, veh/h	1709	304	770	4072	259	834
Arrive On Green	0.39	0.39	0.73	1.00	0.15	0.15
Sat Flow, veh/h	4511	773	1774	5253	1774	1583
Grp Volume(v), veh/h	859	438	377	1673	219	208
Grp Sat Flow(s),veh/h/ln	1695	1726	1774	1695	1774	1583
Q Serve(g_s), s	30.9	31.0	0.0	0.0	18.0	0.0
Cycle Q Clear(g_c), s	30.9	31.0	0.0	0.0	18.0	0.0
Prop In Lane		0.45	1.00		1.00	1.00
Lane Grp Cap(c), veh/h	1333	679	770	4072	259	834
V/C Ratio(X)	0.64	0.64	0.49	0.41	0.85	0.25
Avail Cap(c_a), veh/h	1333	679	770	4072	390	951
HCM Platoon Ratio	1.00	1.00	2.00	2.00	1.00	1.00
Upstream Filter(I)	0.94	0.94	0.79	0.79	1.00	1.00
Uniform Delay (d), s/veh	37.0	37.2	10.2	0.0	62.4	19.3
Incr Delay (d2), s/veh	2.3	4.4	0.1	0.2	8.9	0.1
Initial Q Delay(d3),s/veh	0.0	0.0	0.0	0.0	0.0	0.0
%ile BackOfQ(50%),veh/ln	14.9	15.6	4.2	0.1	9.5	8.6
LnGrp Delay(d),s/veh	39.2	41.6	10.4	0.2	71.4	19.5
LnGrp LOS	D	D	B	A	E	B
Approach Vol, veh/h	1297			2050	427	
Approach Delay, s/veh	40.0			2.1	46.1	
Approach LOS	D			A	D	

Timer	1	2	3	4	5	6	7	8
Assigned Phs		2		4	5	6		
Phs Duration (G+Y+Rc), s		124.1		25.9	61.1	63.0		
Change Period (Y+Rc), s		5.0		5.0	5.0	* 5		
Max Green Setting (Gmax), s		108.0		32.0	47.0	* 58		
Max Q Clear Time (g_c+I1), s		2.0		20.0	2.0	33.0		
Green Ext Time (p_c), s		5.3		0.8	0.5	3.1		

Intersection Summary	
HCM 2010 Ctrl Delay	20.1
HCM 2010 LOS	C

Notes

* HCM 2010 computational engine requires equal clearance times for the phases crossing the barrier.

Movement	EBL	EBT	EBR	WBL	WBT	WBR	NBL	NBT	NBR	SBL	SBT	SBR
Lane Configurations												
Traffic Volume (veh/h)	33	978	108	110	1571	12	351	8	141	18	13	67
Future Volume (veh/h)	33	978	108	110	1571	12	351	8	141	18	13	67
Number	1	6	16	5	2	12	7	4	14	3	8	18
Initial Q (Qb), veh	0	0	0	0	0	0	0	0	0	0	0	0
Ped-Bike Adj(A_pbT)	1.00		1.00	1.00		1.00	1.00		1.00	1.00		1.00
Parking Bus, Adj	1.00	1.00	1.00	1.00	1.00	1.00	1.00	1.00	1.00	1.00	1.00	1.00
Adj Sat Flow, veh/h/ln	1863	1863	1900	1863	1863	1900	1863	1863	1900	1900	1863	1900
Adj Flow Rate, veh/h	41	1222	135	113	1620	12	439	10	176	25	18	93
Adj No. of Lanes	1	3	0	2	3	0	2	1	0	0	1	0
Peak Hour Factor	0.80	0.80	0.80	0.97	0.97	0.97	0.80	0.80	0.80	0.72	0.72	0.72
Percent Heavy Veh, %	2	2	2	2	2	2	2	2	2	2	2	2
Cap, veh/h	334	2893	320	528	2673	20	618	23	410	77	66	247
Arrive On Green	0.23	1.00	1.00	0.03	0.51	0.50	0.27	0.27	0.26	0.27	0.27	0.26
Sat Flow, veh/h	1774	4649	513	3442	5208	39	2477	86	1510	179	242	911
Grp Volume(v), veh/h	41	891	466	113	1055	577	439	0	186	136	0	0
Grp Sat Flow(s),veh/h/ln	1774	1695	1772	1721	1695	1856	1239	0	1596	1333	0	0
Q Serve(g_s), s	0.0	0.0	0.0	2.6	33.0	33.0	18.2	0.0	14.6	1.8	0.0	0.0
Cycle Q Clear(g_c), s	0.0	0.0	0.0	2.6	33.0	33.0	34.6	0.0	14.6	16.4	0.0	0.0
Prop In Lane	1.00		0.29	1.00		0.02	1.00		0.95	0.18		0.68
Lane Grp Cap(c), veh/h	334	2110	1103	528	1740	953	618	0	433	390	0	0
V/C Ratio(X)	0.12	0.42	0.42	0.21	0.61	0.61	0.71	0.00	0.43	0.35	0.00	0.00
Avail Cap(c_a), veh/h	334	2110	1103	621	1740	953	821	0	564	515	0	0
HCM Platoon Ratio	2.00	2.00	2.00	1.00	1.00	1.00	1.00	1.00	1.00	1.00	1.00	1.00
Upstream Filter(I)	0.83	0.83	0.83	1.00	1.00	1.00	1.00	0.00	1.00	1.00	0.00	0.00
Uniform Delay (d), s/veh	28.2	0.0	0.0	21.0	25.8	25.8	55.5	0.0	45.9	44.6	0.0	0.0
Incr Delay (d2), s/veh	0.1	0.5	1.0	0.1	1.6	2.9	1.5	0.0	0.5	0.4	0.0	0.0
Initial Q Delay(d3),s/veh	0.0	0.0	0.0	0.0	0.0	0.0	0.0	0.0	0.0	0.0	0.0	0.0
%ile BackOfQ(50%),veh/ln	1.0	0.2	0.3	1.2	15.8	17.6	8.9	0.0	6.5	4.8	0.0	0.0
LnGrp Delay(d),s/veh	28.2	0.5	1.0	21.1	27.4	28.7	57.1	0.0	46.4	45.0	0.0	0.0
LnGrp LOS	C	A	A	C	C	C	E		D	D		
Approach Vol, veh/h		1398			1745			625			136	
Approach Delay, s/veh		1.5			27.4			53.9			45.0	
Approach LOS		A			C			D			D	

Timer	1	2	3	4	5	6	7	8
Assigned Phs	1	2		4	5	6		8
Phs Duration (G+Y+Rc), s	24.3	81.0		44.7	8.0	97.3		44.7
Change Period (Y+Rc), s	6.0	* 6		6.0	3.0	6.0		6.0
Max Green Setting (Gmax), s	9.3	* 75		51.0	9.0	75.0		51.0
Max Q Clear Time (g_c+I1), s	2.0	35.0		36.6	4.6	2.0		18.4
Green Ext Time (p_c), s	0.0	4.2		2.2	0.1	3.4		0.7

Intersection Summary	
HCM 2010 Ctrl Delay	23.0
HCM 2010 LOS	C

Notes

* HCM 2010 computational engine requires equal clearance times for the phases crossing the barrier.

Movement	EBL	EBT	EBR	WBL	WBT	WBR	NBL	NBT	NBR	SBL	SBT	SBR
Lane Configurations												
Traffic Volume (veh/h)	3	1032	102	174	1434	11	258	4	374	5	1	1
Future Volume (veh/h)	3	1032	102	174	1434	11	258	4	374	5	1	1
Number	1	6	16	5	2	12	7	4	14	3	8	18
Initial Q (Qb), veh	0	0	0	0	0	0	0	0	0	0	0	0
Ped-Bike Adj(A_pbT)	1.00		1.00	1.00		1.00	1.00		1.00	1.00		1.00
Parking Bus, Adj	1.00	1.00	1.00	1.00	1.00	1.00	1.00	1.00	1.00	1.00	1.00	1.00
Adj Sat Flow, veh/h/ln	1863	1863	1900	1863	1863	1900	1863	1863	1863	1900	1863	1900
Adj Flow Rate, veh/h	3	1147	113	176	1448	11	287	4	416	9	2	2
Adj No. of Lanes	1	3	0	1	3	0	1	1	1	0	1	0
Peak Hour Factor	0.90	0.90	0.90	0.99	0.99	0.99	0.90	0.90	0.90	0.55	0.55	0.55
Percent Heavy Veh, %	2	2	2	2	2	2	2	2	2	2	2	2
Cap, veh/h	186	1796	177	399	3014	23	567	686	583	319	71	64
Arrive On Green	0.38	0.38	0.38	0.32	1.00	1.00	0.37	0.37	0.37	0.37	0.37	0.36
Sat Flow, veh/h	363	4708	464	1774	5206	40	1407	1863	1583	758	193	173
Grp Volume(v), veh/h	3	826	434	176	943	516	287	4	416	13	0	0
Grp Sat Flow(s),veh/h/ln	363	1695	1781	1774	1695	1856	1407	1863	1583	1124	0	0
Q Serve(g_s), s	0.8	30.3	30.3	0.2	0.0	0.0	23.7	0.2	34.2	0.0	0.0	0.0
Cycle Q Clear(g_c), s	0.8	30.3	30.3	0.2	0.0	0.0	24.4	0.2	34.2	0.7	0.0	0.0
Prop In Lane	1.00		0.26	1.00		0.02	1.00		1.00	0.69		0.15
Lane Grp Cap(c), veh/h	186	1294	680	399	1963	1074	567	686	583	454	0	0
V/C Ratio(X)	0.02	0.64	0.64	0.44	0.48	0.48	0.51	0.01	0.71	0.03	0.00	0.00
Avail Cap(c_a), veh/h	186	1294	680	399	1963	1074	567	686	583	454	0	0
HCM Platoon Ratio	1.00	1.00	1.00	2.00	2.00	2.00	1.00	1.00	1.00	1.00	1.00	1.00
Upstream Filter(I)	1.00	1.00	1.00	1.00	1.00	1.00	1.00	1.00	1.00	1.00	0.00	0.00
Uniform Delay (d), s/veh	29.3	38.4	38.6	38.8	0.0	0.0	37.9	30.4	41.1	30.6	0.0	0.0
Incr Delay (d2), s/veh	0.2	2.4	4.6	3.5	0.8	1.5	3.2	0.0	7.3	0.1	0.0	0.0
Initial Q Delay(d3),s/veh	0.0	0.0	0.0	0.0	0.0	0.0	0.0	0.0	0.0	0.0	0.0	0.0
%ile BackOfQ(50%),veh/ln	0.1	14.5	15.8	5.5	0.2	0.5	10.1	0.1	16.1	0.4	0.0	0.0
LnGrp Delay(d),s/veh	29.5	40.8	43.1	42.3	0.8	1.5	41.1	30.4	48.4	30.7	0.0	0.0
LnGrp LOS	C	D	D	D	A	A	D	C	D	C		
Approach Vol, veh/h		1263			1635			707			13	
Approach Delay, s/veh		41.6			5.5			45.3			30.7	
Approach LOS		D			A			D			C	

Timer	1	2	3	4	5	6	7	8
Assigned Phs		2		4	5	6		8
Phs Duration (G+Y+Rc), s		92.0		60.0	30.0	62.0		60.0
Change Period (Y+Rc), s		5.0		5.0	5.0	* 5		5.0
Max Green Setting (Gmax), s		85.0		55.0	25.0	* 57		55.0
Max Q Clear Time (g_c+I1), s		2.0		36.2	2.2	32.3		2.7
Green Ext Time (p_c), s		3.6		2.4	0.2	3.0		0.1

Intersection Summary		
HCM 2010 Ctrl Delay		26.0
HCM 2010 LOS		C

Notes

* HCM 2010 computational engine requires equal clearance times for the phases crossing the barrier.

Movement	EBL	EBT	EBR	WBL	WBT	WBR	NBL	NBT	NBR	SBL	SBT	SBR
Lane Configurations												
Traffic Volume (veh/h)	18	1393	0	21	1555	69	5	1	119	205	1	59
Future Volume (veh/h)	18	1393	0	21	1555	69	5	1	119	205	1	59
Number	1	6	16	5	2	12	7	4	14	3	8	18
Initial Q (Qb), veh	0	0	0	0	0	0	0	0	0	0	0	0
Ped-Bike Adj(A_pbT)	1.00		1.00	1.00		1.00	1.00		1.00	1.00		1.00
Parking Bus, Adj	1.00	1.00	1.00	1.00	1.00	1.00	1.00	1.00	1.00	1.00	1.00	1.00
Adj Sat Flow, veh/h/ln	1863	1863	1900	1863	1863	1900	1900	1863	1900	1863	1863	1900
Adj Flow Rate, veh/h	20	1531	0	22	1637	73	6	1	142	225	1	65
Adj No. of Lanes	1	3	0	1	3	0	0	1	0	1	1	0
Peak Hour Factor	0.91	0.91	0.91	0.95	0.95	0.95	0.84	0.84	0.84	0.91	0.91	0.91
Percent Heavy Veh, %	2	2	2	2	2	2	2	2	2	2	2	2
Cap, veh/h	176	2678	0	269	2629	117	35	18	554	467	9	573
Arrive On Green	0.05	1.00	0.00	0.03	0.53	0.52	0.37	0.37	0.36	0.37	0.37	0.36
Sat Flow, veh/h	1774	5253	0	1774	4991	222	26	48	1511	1240	24	1563
Grp Volume(v), veh/h	20	1531	0	22	1112	598	149	0	0	225	0	66
Grp Sat Flow(s),veh/h/ln	1774	1695	0	1774	1695	1823	1586	0	0	1240	0	1587
Q Serve(g_s), s	0.8	0.0	0.0	0.9	34.6	34.7	0.0	0.0	0.0	16.4	0.0	4.2
Cycle Q Clear(g_c), s	0.8	0.0	0.0	0.9	34.6	34.7	9.9	0.0	0.0	26.3	0.0	4.2
Prop In Lane	1.00		0.00	1.00		0.12	0.04		0.95	1.00		0.98
Lane Grp Cap(c), veh/h	176	2678	0	269	1786	960	606	0	0	467	0	582
V/C Ratio(X)	0.11	0.57	0.00	0.08	0.62	0.62	0.25	0.00	0.00	0.48	0.00	0.11
Avail Cap(c_a), veh/h	176	2678	0	269	1786	960	606	0	0	467	0	582
HCM Platoon Ratio	2.00	2.00	2.00	1.00	1.00	1.00	1.00	1.00	1.00	1.00	1.00	1.00
Upstream Filter(I)	1.00	1.00	0.00	1.00	1.00	1.00	1.00	0.00	0.00	1.00	0.00	1.00
Uniform Delay (d), s/veh	19.8	0.0	0.0	16.1	25.0	25.1	33.5	0.0	0.0	39.7	0.0	31.7
Incr Delay (d2), s/veh	1.3	0.9	0.0	0.6	1.6	3.0	1.0	0.0	0.0	3.5	0.0	0.4
Initial Q Delay(d3),s/veh	0.0	0.0	0.0	0.0	0.0	0.0	0.0	0.0	0.0	0.0	0.0	0.0
%ile BackOfQ(50%),veh/ln	0.4	0.2	0.0	0.5	16.6	18.3	4.5	0.0	0.0	8.0	0.0	1.9
LnGrp Delay(d),s/veh	21.1	0.9	0.0	16.7	26.6	28.1	34.5	0.0	0.0	43.2	0.0	32.1
LnGrp LOS	C	A		B	C	C	C			D		C
Approach Vol, veh/h		1551			1732			149			291	
Approach Delay, s/veh		1.2			27.0			34.5			40.7	
Approach LOS		A			C			C			D	

Timer	1	2	3	4	5	6	7	8
Assigned Phs	1	2		4	5	6		8
Phs Duration (G+Y+Rc), s	8.0	83.0		59.0	8.0	83.0		59.0
Change Period (Y+Rc), s	3.0	5.0		5.0	3.0	5.0		5.0
Max Green Setting (Gmax), s	5.0	78.0		54.0	5.0	78.0		54.0
Max Q Clear Time (g_c+I1), s	2.8	36.7		11.9	2.9	2.0		28.3
Green Ext Time (p_c), s	0.0	4.6		0.8	0.0	4.7		0.9

Intersection Summary		
HCM 2010 Ctrl Delay	17.6	
HCM 2010 LOS	B	

Movement	EBL	EBT	EBR	WBL	WBT	WBR	NBL	NBT	NBR	SBL	SBT	SBR
Lane Configurations												
Traffic Volume (veh/h)	321	1257	174	251	1017	141	243	831	322	275	849	340
Future Volume (veh/h)	321	1257	174	251	1017	141	243	831	322	275	849	340
Number	3	8	18	7	4	14	1	6	16	5	2	12
Initial Q (Qb), veh	0	0	0	0	0	0	0	0	0	0	0	0
Ped-Bike Adj(A_pbT)	1.00		1.00	1.00		1.00	1.00		1.00	1.00		1.00
Parking Bus, Adj	1.00	1.00	1.00	1.00	1.00	1.00	1.00	1.00	1.00	1.00	1.00	1.00
Adj Sat Flow, veh/h/ln	1863	1863	1900	1863	1863	1900	1863	1863	1900	1863	1863	1863
Adj Flow Rate, veh/h	361	1412	196	267	1082	150	264	903	350	302	933	374
Adj No. of Lanes	2	3	0	2	3	0	2	3	0	2	3	1
Peak Hour Factor	0.89	0.89	0.89	0.94	0.94	0.94	0.92	0.92	0.92	0.91	0.91	0.91
Percent Heavy Veh, %	2	2	2	2	2	2	2	2	2	2	2	2
Cap, veh/h	404	1588	220	306	1509	209	472	1163	450	472	1639	714
Arrive On Green	0.12	0.35	0.34	0.09	0.33	0.32	0.14	0.32	0.31	0.14	0.32	0.32
Sat Flow, veh/h	3442	4516	627	3442	4517	626	3442	3611	1396	3442	5085	1583
Grp Volume(v), veh/h	361	1060	548	267	812	420	264	848	405	302	933	374
Grp Sat Flow(s),veh/h/ln	1721	1695	1752	1721	1695	1752	1721	1695	1616	1721	1695	1583
Q Serve(g_s), s	18.6	53.1	53.2	13.8	37.7	37.9	12.9	40.7	41.0	14.9	27.4	19.2
Cycle Q Clear(g_c), s	18.6	53.1	53.2	13.8	37.7	37.9	12.9	40.7	41.0	14.9	27.4	19.2
Prop In Lane	1.00		0.36	1.00		0.36	1.00		0.86	1.00		1.00
Lane Grp Cap(c), veh/h	404	1192	616	306	1133	585	472	1092	521	472	1639	714
V/C Ratio(X)	0.89	0.89	0.89	0.87	0.72	0.72	0.56	0.78	0.78	0.64	0.57	0.52
Avail Cap(c_a), veh/h	516	1243	642	363	1133	585	472	1092	521	472	1639	714
HCM Platoon Ratio	1.00	1.00	1.00	1.00	1.00	1.00	1.00	1.00	1.00	1.00	1.00	1.00
Upstream Filter(I)	1.00	1.00	1.00	1.00	1.00	1.00	1.00	1.00	1.00	1.00	1.00	1.00
Uniform Delay (d), s/veh	78.3	55.0	55.4	81.0	52.5	52.8	72.6	55.1	56.0	73.4	50.6	16.6
Incr Delay (d2), s/veh	14.1	8.0	14.1	17.2	2.2	4.2	0.9	5.4	10.9	2.2	1.4	2.7
Initial Q Delay(d3),s/veh	0.0	0.0	0.0	0.0	0.0	0.0	0.0	0.0	0.0	0.0	0.0	0.0
%ile BackOfQ(50%),veh/ln	9.7	26.2	28.2	7.3	18.0	19.0	6.2	19.9	19.9	7.3	13.1	8.9
LnGrp Delay(d),s/veh	92.4	63.1	69.5	98.1	54.7	57.1	73.5	60.5	66.9	75.7	52.1	19.4
LnGrp LOS	F	E	E	F	D	E	E	E	E	E	D	B
Approach Vol, veh/h		1969			1499			1517			1609	
Approach Delay, s/veh		70.3			63.1			64.5			48.9	
Approach LOS		E			E			E			D	

Timer	1	2	3	4	5	6	7	8
Assigned Phs	1	2	3	4	5	6	7	8
Phs Duration (G+Y+Rc), s	28.7	62.0	25.2	64.1	28.7	62.0	22.0	67.3
Change Period (Y+Rc), s	4.0	6.0	4.0	6.0	4.0	6.0	6.0	* 6
Max Green Setting (Gmax), s	21.0	56.0	27.0	56.0	21.0	56.0	19.0	* 64
Max Q Clear Time (g_c+I1), s	14.9	29.4	20.6	39.9	16.9	43.0	15.8	55.2
Green Ext Time (p_c), s	0.3	2.5	0.5	7.2	0.2	2.8	0.2	6.1

Intersection Summary	
HCM 2010 Ctrl Delay	62.1
HCM 2010 LOS	E

Notes

* HCM 2010 computational engine requires equal clearance times for the phases crossing the barrier.

Movement	EBL	EBT	EBR	WBL	WBT	WBR	NBL	NBT	NBR	SBL	SBT	SBR
Lane Configurations												
Traffic Volume (veh/h)	107	1703	32	0	995	147	100	44	5	278	95	308
Future Volume (veh/h)	107	1703	32	0	995	147	100	44	5	278	95	308
Number	1	6	16	5	2	12	7	4	14	3	8	18
Initial Q (Qb), veh	0	0	0	0	0	0	0	0	0	0	0	0
Ped-Bike Adj(A_pbT)	1.00		1.00	1.00		1.00	1.00		1.00	1.00		1.00
Parking Bus, Adj	1.00	1.00	1.00	1.00	1.00	1.00	1.00	1.00	1.00	1.00	1.00	1.00
Adj Sat Flow, veh/h/ln	1863	1863	1900	0	1863	1900	1863	1863	1863	1863	1863	1863
Adj Flow Rate, veh/h	119	1892	36	0	1082	160	125	55	6	302	103	335
Adj No. of Lanes	1	3	0	0	3	0	1	1	1	1	1	1
Peak Hour Factor	0.90	0.90	0.90	0.92	0.92	0.92	0.80	0.80	0.80	0.92	0.92	0.92
Percent Heavy Veh, %	2	2	2	0	2	2	2	2	2	2	2	2
Cap, veh/h	316	3254	62	0	2511	371	208	248	211	441	466	466
Arrive On Green	0.05	0.63	0.62	0.00	0.56	0.55	0.05	0.13	0.13	0.17	0.25	0.24
Sat Flow, veh/h	1774	5138	98	0	4643	661	1774	1863	1583	1774	1863	1583
Grp Volume(v), veh/h	119	1248	680	0	819	423	125	55	6	302	103	335
Grp Sat Flow(s),veh/h/ln	1774	1695	1846	0	1695	1746	1774	1863	1583	1774	1863	1583
Q Serve(g_s), s	4.9	38.4	38.5	0.0	25.2	25.4	0.0	4.7	0.6	12.9	7.9	27.6
Cycle Q Clear(g_c), s	4.9	38.4	38.5	0.0	25.2	25.4	0.0	4.7	0.6	12.9	7.9	27.6
Prop In Lane	1.00		0.05	0.00		0.38	1.00		1.00	1.00		1.00
Lane Grp Cap(c), veh/h	316	2147	1169	0	1902	980	208	248	211	441	466	466
V/C Ratio(X)	0.38	0.58	0.58	0.00	0.43	0.43	0.60	0.22	0.03	0.68	0.22	0.72
Avail Cap(c_a), veh/h	572	2147	1169	0	1902	980	277	248	211	510	466	466
HCM Platoon Ratio	1.00	1.00	1.00	1.00	1.00	1.00	1.00	1.00	1.00	1.00	1.00	1.00
Upstream Filter(I)	1.00	1.00	1.00	0.00	1.00	1.00	1.00	1.00	1.00	1.00	1.00	1.00
Uniform Delay (d), s/veh	16.6	19.1	19.2	0.0	22.9	23.1	76.4	69.7	67.9	62.3	53.6	37.8
Incr Delay (d2), s/veh	0.3	1.2	2.1	0.0	0.7	1.4	1.0	2.0	0.2	2.2	1.1	9.2
Initial Q Delay(d3),s/veh	0.0	0.0	0.0	0.0	0.0	0.0	0.0	0.0	0.0	0.0	0.0	0.0
%ile BackOfQ(50%),veh/ln	2.4	18.2	20.2	0.0	11.9	12.7	6.0	2.6	0.3	13.9	4.2	13.3
LnGrp Delay(d),s/veh	16.9	20.3	21.3	0.0	23.6	24.5	77.5	71.7	68.1	64.5	54.7	47.0
LnGrp LOS	B	C	C		C	C	E	E	E	E	D	D
Approach Vol, veh/h		2047			1242			186			740	
Approach Delay, s/veh		20.4			23.9			75.5			55.2	
Approach LOS		C			C			E			E	

Timer	1	2	3	4	5	6	7	8
Assigned Phs	1	2	3	4		6	7	8
Phs Duration (G+Y+Rc), s	13.0	105.0	34.0	28.0		118.0	13.0	49.0
Change Period (Y+Rc), s	6.0	6.0	6.0	7.0		6.0	6.0	7.0
Max Green Setting (Gmax), s	33.0	66.0	35.0	21.0		105.0	14.0	42.0
Max Q Clear Time (g_c+I1), s	10.9	27.4	14.9	6.7		40.5	2.0	29.6
Green Ext Time (p_c), s	0.1	3.0	0.4	0.1		5.5	0.1	1.1

Intersection Summary	
HCM 2010 Ctrl Delay	30.0
HCM 2010 LOS	C

Intersection	
Int Delay, s/veh	20.9

Movement	EBL	EBT	EBR	WBL	WBT	WBR	NBL	NBT	NBR	SBL	SBT	SBR
Lane Configurations												
Traffic Vol, veh/h	22	1537	427	153	1107	20	0	0	160	0	0	35
Future Vol, veh/h	22	1537	427	153	1107	20	0	0	160	0	0	35
Conflicting Peds, #/hr	0	0	0	0	0	0	0	0	0	0	0	0
Sign Control	Free	Free	Free	Free	Free	Free	Stop	Stop	Stop	Stop	Stop	Stop
RT Channelized	-	-	None	-	-	None	-	-	None	-	-	None
Storage Length	-	-	-	300	-	-	-	-	0	-	-	0
Veh in Median Storage, #	-	0	-	-	0	-	-	0	-	-	0	-
Grade, %	-	0	-	-	0	-	-	0	-	-	0	-
Peak Hour Factor	92	92	92	92	92	92	92	92	92	92	92	92
Heavy Vehicles, %	2	2	2	2	2	2	2	2	2	2	2	2
Mvmt Flow	24	1671	464	166	1203	22	0	0	174	0	0	38

Major/Minor	Major1			Major2			Minor1			Minor2		
Conflicting Flow All	1225	0	0	2135	0	0	-	-	1068	-	-	613
Stage 1	-	-	-	-	-	-	-	-	-	-	-	-
Stage 2	-	-	-	-	-	-	-	-	-	-	-	-
Critical Hdwy	5.34	-	-	5.34	-	-	-	-	7.14	-	-	7.14
Critical Hdwy Stg 1	-	-	-	-	-	-	-	-	-	-	-	-
Critical Hdwy Stg 2	-	-	-	-	-	-	-	-	-	-	-	-
Follow-up Hdwy	3.12	-	-	3.12	-	-	-	-	3.92	-	-	3.92
Pot Cap-1 Maneuver	304	-	-	~ 107	-	-	0	0	187	0	0	373
Stage 1	-	-	-	-	-	-	0	0	-	0	0	-
Stage 2	-	-	-	-	-	-	0	0	-	0	0	-
Platoon blocked, %		-	-		-	-						
Mov Cap-1 Maneuver	304	-	-	~ 107	-	-	-	-	187	-	-	373
Mov Cap-2 Maneuver	-	-	-	-	-	-	-	-	-	-	-	-
Stage 1	-	-	-	-	-	-	-	-	-	-	-	-
Stage 2	-	-	-	-	-	-	-	-	-	-	-	-

Approach	EB	WB	NB	SB
HCM Control Delay, s	0.2	43.2	99.6	15.7
HCM LOS			F	C

Minor Lane/Major Mvmt	NBLn1	EBL	EBT	EBR	WBL	WBT	WBR	SBLn1
Capacity (veh/h)	187	304	-	-	~ 107	-	-	373
HCM Lane V/C Ratio	0.93	0.079	-	-	1.554	-	-	0.102
HCM Control Delay (s)	99.6	17.9	-	-	$ 361	-	-	15.7
HCM Lane LOS	F	C	-	-	F	-	-	C
HCM 95th %tile Q(veh)	7.3	0.3	-	-	12.4	-	-	0.3

Notes			
~: Volume exceeds capacity	$: Delay exceeds 300s	+: Computation Not Defined	*: All major volume in platoon

Intersection	
Int Delay, s/veh	1.2

Movement	EBT	EBR	WBL	WBT	NBL	NBR
Lane Configurations						
Traffic Vol, veh/h	1653	44	24	1262	18	17
Future Vol, veh/h	1653	44	24	1262	18	17
Conflicting Peds, #/hr	0	0	0	0	0	0
Sign Control	Free	Free	Free	Free	Stop	Stop
RT Channelized	-	None	-	None	-	None
Storage Length	-	-	200	-	0	0
Veh in Median Storage, #	0	-	-	0	0	-
Grade, %	0	-	-	0	0	-
Peak Hour Factor	92	92	92	92	92	92
Heavy Vehicles, %	2	2	2	2	2	2
Mvmt Flow	1797	48	26	1372	20	18

Major/Minor	Major1		Major2		Minor1	
Conflicting Flow All	0	0	1845	0	2422	923
Stage 1	-	-	-	-	1821	-
Stage 2	-	-	-	-	601	-
Critical Hdwy	-	-	5.34	-	5.74	7.14
Critical Hdwy Stg 1	-	-	-	-	6.64	-
Critical Hdwy Stg 2	-	-	-	-	6.04	-
Follow-up Hdwy	-	-	3.12	-	3.82	3.92
Pot Cap-1 Maneuver	-	-	150	-	55	233
Stage 1	-	-	-	-	74	-
Stage 2	-	-	-	-	465	-
Platoon blocked, %	-	-		-		
Mov Cap-1 Maneuver	-	-	150	-	45	233
Mov Cap-2 Maneuver	-	-	-	-	45	-
Stage 1	-	-	-	-	74	-
Stage 2	-	-	-	-	385	-

Approach	EB	WB	NB
HCM Control Delay, s	0	0.6	80.6
HCM LOS			F

Minor Lane/Major Mvmt	NBLn1	NBLn2	EBT	EBR	WBL	WBT
Capacity (veh/h)	45	233	-	-	150	-
HCM Lane V/C Ratio	0.435	0.079	-	-	0.174	-
HCM Control Delay (s)	136.2	21.8	-	-	34	-
HCM Lane LOS	F	C	-	-	D	-
HCM 95th %tile Q(veh)	1.6	0.3	-	-	0.6	-

Movement	EBL	EBT	EBR	WBL	WBT	WBR	NBL	NBT	NBR	SBL	SBT	SBR
Lane Configurations												
Traffic Volume (veh/h)	388	1039	243	206	761	221	305	1292	159	388	1702	220
Future Volume (veh/h)	388	1039	243	206	761	221	305	1292	159	388	1702	220
Number	3	8	18	7	4	14	1	6	16	5	2	12
Initial Q (Qb), veh	0	0	0	0	0	0	0	0	0	0	0	0
Ped-Bike Adj(A_pbT)	1.00		1.00	1.00		1.00	1.00		1.00	1.00		1.00
Parking Bus, Adj	1.00	1.00	1.00	1.00	1.00	1.00	1.00	1.00	1.00	1.00	1.00	1.00
Adj Sat Flow, veh/h/ln	1863	1863	1863	1863	1863	1863	1863	1863	1900	1863	1863	1863
Adj Flow Rate, veh/h	417	1117	261	240	885	257	377	1595	196	400	1755	227
Adj No. of Lanes	2	3	1	2	3	1	2	3	0	2	3	1
Peak Hour Factor	0.93	0.93	0.93	0.86	0.86	0.86	0.81	0.81	0.81	0.97	0.97	0.97
Percent Heavy Veh, %	2	2	2	2	2	2	2	2	2	2	2	2
Cap, veh/h	475	1260	583	299	1031	540	435	1892	232	496	2217	918
Arrive On Green	0.14	0.25	0.24	0.09	0.20	0.20	0.13	0.41	0.40	0.14	0.44	0.44
Sat Flow, veh/h	3442	5085	1583	3442	5085	1583	3442	4591	563	3442	5085	1583
Grp Volume(v), veh/h	417	1117	261	240	885	257	377	1177	614	400	1755	227
Grp Sat Flow(s),veh/h/ln	1721	1695	1583	1721	1695	1583	1721	1695	1763	1721	1695	1583
Q Serve(g_s), s	19.6	34.9	14.8	11.3	27.7	5.0	17.7	51.6	51.9	18.6	49.0	11.6
Cycle Q Clear(g_c), s	19.6	34.9	14.8	11.3	27.7	5.0	17.7	51.6	51.9	18.6	49.0	11.6
Prop In Lane	1.00		1.00	1.00		1.00	1.00		0.32	1.00		1.00
Lane Grp Cap(c), veh/h	475	1260	583	299	1031	540	435	1397	727	496	2217	918
V/C Ratio(X)	0.88	0.89	0.45	0.80	0.86	0.48	0.87	0.84	0.84	0.81	0.79	0.25
Avail Cap(c_a), veh/h	501	1294	594	313	1031	540	459	1397	727	501	2217	918
HCM Platoon Ratio	1.00	1.00	1.00	1.00	1.00	1.00	1.00	1.00	1.00	1.00	1.00	1.00
Upstream Filter(I)	1.00	1.00	1.00	1.00	1.00	1.00	1.00	1.00	1.00	1.00	1.00	1.00
Uniform Delay (d), s/veh	69.8	59.8	21.6	73.9	63.5	20.6	70.7	43.7	44.1	68.4	40.1	17.0
Incr Delay (d2), s/veh	14.9	7.5	0.4	12.3	7.2	0.5	14.5	6.3	11.6	8.7	3.0	0.6
Initial Q Delay(d3),s/veh	0.0	0.0	0.0	0.0	0.0	0.0	0.0	0.0	0.0	0.0	0.0	0.0
%ile BackOfQ(50%),veh/ln	10.3	17.2	6.5	5.9	13.7	6.1	9.3	25.4	27.6	9.4	23.5	5.2
LnGrp Delay(d),s/veh	84.7	67.3	22.0	86.3	70.7	21.1	85.2	50.0	55.6	77.0	43.1	17.6
LnGrp LOS	F	E	C	F	E	C	F	D	E	E	D	B
Approach Vol, veh/h		1795			1382			2168			2382	
Approach Delay, s/veh		64.7			64.2			57.7			46.4	
Approach LOS		E			E			E			D	

Timer	1	2	3	4	5	6	7	8
Assigned Phs	1	2	3	4	5	6	7	8
Phs Duration (G+Y+Rc), s	24.9	75.9	26.8	37.5	28.8	72.0	19.3	44.9
Change Period (Y+Rc), s	5.0	6.0	5.0	6.0	6.0	* 6	6.0	* 6
Max Green Setting (Gmax), s	21.0	68.0	23.0	31.0	23.0	* 66	14.0	* 40
Max Q Clear Time (g_c+I1), s	19.7	51.0	21.6	29.7	20.6	53.9	13.3	36.9
Green Ext Time (p_c), s	0.1	5.9	0.1	0.8	0.2	4.6	0.0	2.0

Intersection Summary	
HCM 2010 Ctrl Delay	57.0
HCM 2010 LOS	E

Notes

* HCM 2010 computational engine requires equal clearance times for the phases crossing the barrier.

Movement	EBL	EBT	EBR	WBL	WBT	WBR	NBL	NBT	NBR	SBL	SBT	SBR
Lane Configurations												
Traffic Volume (veh/h)	898	1527	588	226	831	131	439	322	191	181	218	260
Future Volume (veh/h)	898	1527	588	226	831	131	439	322	191	181	218	260
Number	1	6	16	5	2	12	7	4	14	3	8	18
Initial Q (Qb), veh	0	0	0	0	0	0	0	0	0	0	0	0
Ped-Bike Adj(A_pbT)	1.00		1.00	1.00		1.00	1.00		1.00	1.00		1.00
Parking Bus, Adj	1.00	1.00	1.00	1.00	1.00	1.00	1.00	1.00	1.00	1.00	1.00	1.00
Adj Sat Flow, veh/h/ln	1863	1863	1863	1863	1863	1900	1863	1863	1900	1863	1863	1863
Adj Flow Rate, veh/h	976	1660	639	238	875	138	472	346	205	197	237	283
Adj No. of Lanes	2	3	2	2	3	0	2	2	0	1	2	2
Peak Hour Factor	0.92	0.92	0.92	0.95	0.95	0.95	0.93	0.93	0.93	0.92	0.92	0.92
Percent Heavy Veh, %	2	2	2	2	2	2	2	2	2	2	2	2
Cap, veh/h	1135	2458	1697	374	1059	166	684	396	230	244	570	1368
Arrive On Green	0.33	0.48	0.48	0.09	0.24	0.24	0.13	0.18	0.18	0.10	0.16	0.16
Sat Flow, veh/h	3442	5085	2787	3442	4434	696	3442	2157	1254	1774	3539	2787
Grp Volume(v), veh/h	976	1660	639	238	668	345	472	283	268	197	237	283
Grp Sat Flow(s),veh/h/ln	1721	1695	1393	1721	1695	1740	1721	1770	1641	1774	1770	1393
Q Serve(g_s), s	47.7	45.1	10.7	7.7	33.6	33.9	20.4	27.9	28.7	16.5	10.8	3.3
Cycle Q Clear(g_c), s	47.7	45.1	10.7	7.7	33.6	33.9	20.4	27.9	28.7	16.5	10.8	3.3
Prop In Lane	1.00		1.00	1.00		0.40	1.00		0.76	1.00		1.00
Lane Grp Cap(c), veh/h	1135	2458	1697	374	810	416	684	325	301	244	570	1368
V/C Ratio(X)	0.86	0.68	0.38	0.64	0.82	0.83	0.69	0.87	0.89	0.81	0.42	0.21
Avail Cap(c_a), veh/h	1135	2458	1697	374	810	416	711	325	301	258	570	1368
HCM Platoon Ratio	1.00	1.00	1.00	1.00	1.00	1.00	1.00	1.00	1.00	1.00	1.00	1.00
Upstream Filter(I)	1.00	1.00	1.00	1.00	1.00	1.00	1.00	1.00	1.00	1.00	1.00	1.00
Uniform Delay (d), s/veh	56.4	35.7	6.3	77.5	64.9	65.0	53.5	71.4	71.7	56.9	67.9	10.1
Incr Delay (d2), s/veh	6.8	1.5	0.6	2.7	9.4	17.2	2.2	25.9	30.2	15.1	2.2	0.3
Initial Q Delay(d3),s/veh	0.0	0.0	0.0	0.0	0.0	0.0	0.0	0.0	0.0	0.0	0.0	0.0
%ile BackOfQ(50%),veh/ln	23.9	21.4	4.4	5.8	16.8	18.3	9.8	16.0	15.6	9.1	5.5	2.2
LnGrp Delay(d),s/veh	63.2	37.2	7.0	80.2	74.3	82.3	55.7	97.3	101.9	72.0	70.1	10.5
LnGrp LOS	E	D	A	F	E	F	E	F	F	E	E	B
Approach Vol, veh/h		3275			1251			1023			717	
Approach Delay, s/veh		39.0			77.6			79.3			47.1	
Approach LOS		D			E			E			D	

Timer	1	2	3	4	5	6	7	8
Assigned Phs	1	2	3	4	5	6	7	8
Phs Duration (G+Y+Rc), s	65.4	49.0	25.6	40.0	21.4	93.0	29.6	36.0
Change Period (Y+Rc), s	6.0	6.0	7.0	7.0	6.0	6.0	7.0	7.0
Max Green Setting (Gmax), s	58.0	43.0	20.0	33.0	14.0	87.0	24.0	29.0
Max Q Clear Time (g_c+I1), s	49.7	35.9	18.5	30.7	9.7	47.1	22.4	12.8
Green Ext Time (p_c), s	2.6	1.6	0.0	0.7	0.2	6.1	0.2	1.9

Intersection Summary	
HCM 2010 Ctrl Delay	54.2
HCM 2010 LOS	D

Intersection	
Int Delay, s/veh	0.3

Movement	EBL	EBT	WBT	WBR	SBL	SBR
Lane Configurations						
Traffic Vol, veh/h	0	1899	1134	51	0	54
Future Vol, veh/h	0	1899	1134	51	0	54
Conflicting Peds, #/hr	0	0	0	0	0	0
Sign Control	Free	Free	Free	Free	Stop	Stop
RT Channelized	-	None	-	None	-	None
Storage Length	-	-	-	-	-	0
Veh in Median Storage, #	-	0	0	-	0	-
Grade, %	-	0	0	-	0	-
Peak Hour Factor	92	92	92	92	92	92
Heavy Vehicles, %	2	2	2	2	2	2
Mvmt Flow	0	2064	1233	55	0	59

Major/Minor	Major1		Major2		Minor2	
Conflicting Flow All	-	0	-	0	-	644
Stage 1	-	-	-	-	-	-
Stage 2	-	-	-	-	-	-
Critical Hdwy	-	-	-	-	-	7.14
Critical Hdwy Stg 1	-	-	-	-	-	-
Critical Hdwy Stg 2	-	-	-	-	-	-
Follow-up Hdwy	-	-	-	-	-	3.92
Pot Cap-1 Maneuver	0	-	-	-	0	356
Stage 1	0	-	-	-	0	-
Stage 2	0	-	-	-	0	-
Platoon blocked, %		-	-	-		
Mov Cap-1 Maneuver	-	-	-	-	-	356
Mov Cap-2 Maneuver	-	-	-	-	-	-
Stage 1	-	-	-	-	-	-
Stage 2	-	-	-	-	-	-

Approach	EB	WB	SB
HCM Control Delay, s	0	0	17.1
HCM LOS			C

Minor Lane/Major Mvmt	EBT	WBT	WBR	SBLn1
Capacity (veh/h)	-	-	-	356
HCM Lane V/C Ratio	-	-	-	0.165
HCM Control Delay (s)	-	-	-	17.1
HCM Lane LOS	-	-	-	C
HCM 95th %tile Q(veh)	-	-	-	0.6

Intersection	
Int Delay, s/veh	1.7

Movement	EBT	EBR	WBL	WBT	NBL	NBR
Lane Configurations						
Traffic Vol, veh/h	1898	0	0	1158	27	24
Future Vol, veh/h	1898	0	0	1158	27	24
Conflicting Peds, #/hr	0	0	0	0	0	0
Sign Control	Free	Free	Free	Free	Stop	Stop
RT Channelized	-	None	-	None	-	None
Storage Length	-	-	-	-	0	50
Veh in Median Storage, #	0	-	-	0	0	-
Grade, %	0	-	-	0	0	-
Peak Hour Factor	92	92	92	92	92	92
Heavy Vehicles, %	2	2	2	2	2	2
Mvmt Flow	2063	0	0	1259	29	26

Major/Minor	Major1		Major2		Minor1	
Conflicting Flow All	0	-	-	-	2567	1032
Stage 1	-	-	-	-	2063	-
Stage 2	-	-	-	-	504	-
Critical Hdwy	-	-	-	-	5.74	7.14
Critical Hdwy Stg 1	-	-	-	-	6.64	-
Critical Hdwy Stg 2	-	-	-	-	6.04	-
Follow-up Hdwy	-	-	-	-	3.82	3.92
Pot Cap-1 Maneuver	-	0	0	-	46	197
Stage 1	-	0	0	-	52	-
Stage 2	-	0	0	-	522	-
Platoon blocked, %	-			-		
Mov Cap-1 Maneuver	-	-	-	-	46	197
Mov Cap-2 Maneuver	-	-	-	-	46	-
Stage 1	-	-	-	-	52	-
Stage 2	-	-	-	-	522	-

Approach	EB	WB	NB
HCM Control Delay, s	0	0	103.5
HCM LOS			F

Minor Lane/Major Mvmt	NBLn1	NBLn2	EBT	WBT
Capacity (veh/h)	46	197	-	-
HCM Lane V/C Ratio	0.638	0.132	-	-
HCM Control Delay (s)	172.4	26	-	-
HCM Lane LOS	F	D	-	-
HCM 95th %tile Q(veh)	2.4	0.4	-	-

Intersection	
Int Delay, s/veh	0

Movement	EBL	EBT	WBT	WBR	SBL	SBR
Lane Configurations						
Traffic Vol, veh/h	0	1922	1155	24	0	3
Future Vol, veh/h	0	1922	1155	24	0	3
Conflicting Peds, #/hr	0	0	0	0	0	0
Sign Control	Free	Free	Free	Free	Stop	Stop
RT Channelized	-	None	-	None	-	None
Storage Length	-	-	-	-	-	0
Veh in Median Storage, #	-	0	0	-	0	-
Grade, %	-	0	0	-	0	-
Peak Hour Factor	92	92	92	92	92	92
Heavy Vehicles, %	2	2	2	2	2	2
Mvmt Flow	0	2089	1255	26	0	3

Major/Minor	Major1		Major2		Minor2	
Conflicting Flow All	-	0	-	0	-	641
Stage 1	-	-	-	-	-	-
Stage 2	-	-	-	-	-	-
Critical Hdwy	-	-	-	-	-	7.14
Critical Hdwy Stg 1	-	-	-	-	-	-
Critical Hdwy Stg 2	-	-	-	-	-	-
Follow-up Hdwy	-	-	-	-	-	3.92
Pot Cap-1 Maneuver	0	-	-	-	0	358
Stage 1	0	-	-	-	0	-
Stage 2	0	-	-	-	0	-
Platoon blocked, %		-	-	-		
Mov Cap-1 Maneuver	-	-	-	-	-	358
Mov Cap-2 Maneuver	-	-	-	-	-	-
Stage 1	-	-	-	-	-	-
Stage 2	-	-	-	-	-	-

Approach	EB	WB	SB
HCM Control Delay, s	0	0	15.1
HCM LOS			C

Minor Lane/Major Mvmt	EBT	WBT	WBR	SBLn1
Capacity (veh/h)	-	-	-	358
HCM Lane V/C Ratio	-	-	-	0.009
HCM Control Delay (s)	-	-	-	15.1
HCM Lane LOS	-	-	-	C
HCM 95th %tile Q(veh)	-	-	-	0

Movement	EBL	EBT	EBR	WBL	WBT	WBR	NBL	NBT	NBR	SBL	SBT	SBR
Lane Configurations												
Traffic Volume (veh/h)	208	1509	205	130	913	152	180	102	180	123	62	86
Future Volume (veh/h)	208	1509	205	130	913	152	180	102	180	123	62	86
Number	1	6	16	5	2	12	7	4	14	3	8	18
Initial Q (Qb), veh	0	0	0	0	0	0	0	0	0	0	0	0
Ped-Bike Adj(A_pbT)	1.00		1.00	1.00		1.00	1.00		1.00	1.00		1.00
Parking Bus, Adj	1.00	1.00	1.00	1.00	1.00	1.00	1.00	1.00	1.00	1.00	1.00	1.00
Adj Sat Flow, veh/h/ln	1863	1863	1900	1863	1863	1900	1863	1863	1863	1863	1863	1863
Adj Flow Rate, veh/h	234	1696	230	144	1014	169	225	128	225	148	75	104
Adj No. of Lanes	1	3	0	1	3	0	1	1	1	1	1	1
Peak Hour Factor	0.89	0.89	0.89	0.90	0.90	0.90	0.80	0.80	0.80	0.83	0.83	0.83
Percent Heavy Veh, %	2	2	2	2	2	2	2	2	2	2	2	2
Cap, veh/h	298	2236	302	430	2663	443	300	237	202	231	151	128
Arrive On Green	0.09	0.49	0.49	0.06	0.20	0.20	0.11	0.13	0.13	0.07	0.08	0.08
Sat Flow, veh/h	1774	4533	612	1774	4393	731	1774	1863	1583	1774	1863	1583
Grp Volume(v), veh/h	234	1267	659	144	782	401	225	128	225	148	75	104
Grp Sat Flow(s),veh/h/ln	1774	1695	1755	1774	1695	1734	1774	1863	1583	1774	1863	1583
Q Serve(g_s), s	11.7	45.3	45.8	4.0	30.0	30.0	17.0	9.7	13.4	10.0	5.8	9.7
Cycle Q Clear(g_c), s	11.7	45.3	45.8	4.0	30.0	30.0	17.0	9.7	13.4	10.0	5.8	9.7
Prop In Lane	1.00		0.35	1.00		0.42	1.00		1.00	1.00		1.00
Lane Grp Cap(c), veh/h	298	1672	866	430	2055	1051	300	237	202	231	151	128
V/C Ratio(X)	0.79	0.76	0.76	0.33	0.38	0.38	0.75	0.54	1.11	0.64	0.50	0.81
Avail Cap(c_a), veh/h	440	1672	866	430	2055	1051	300	397	338	231	310	264
HCM Platoon Ratio	1.00	1.00	1.00	0.33	0.33	0.33	1.00	1.00	1.00	1.00	1.00	1.00
Upstream Filter(I)	1.00	1.00	1.00	0.78	0.78	0.78	1.00	1.00	1.00	1.00	1.00	1.00
Uniform Delay (d), s/veh	29.5	30.7	30.8	53.7	35.6	35.6	54.3	61.3	32.3	60.0	66.0	67.8
Incr Delay (d2), s/veh	3.0	3.3	6.3	0.1	0.4	0.8	9.1	1.4	77.2	4.6	1.9	8.9
Initial Q Delay(d3),s/veh	0.0	0.0	0.0	0.0	0.0	0.0	0.0	0.0	0.0	0.0	0.0	0.0
%ile BackOfQ(50%),veh/ln	5.9	21.9	23.7	5.7	14.2	14.7	9.1	5.1	11.6	5.9	3.1	4.6
LnGrp Delay(d),s/veh	32.4	34.0	37.1	53.8	36.0	36.5	63.4	62.7	109.5	64.6	67.9	76.7
LnGrp LOS	C	C	D	D	D	D	E	E	F	E	E	E
Approach Vol, veh/h		2160			1327			578			327	
Approach Delay, s/veh		34.8			38.1			81.2			69.2	
Approach LOS		C			D			F			E	

Timer	1	2	3	4	5	6	7	8
Assigned Phs	1	2	3	4	5	6	7	8
Phs Duration (G+Y+Rc), s	16.9	95.9	13.0	24.1	33.9	79.0	20.0	17.1
Change Period (Y+Rc), s	3.0	5.0	3.0	5.0	5.0	* 5	3.0	5.0
Max Green Setting (Gmax), s	26.0	66.0	10.0	32.0	18.0	* 74	17.0	25.0
Max Q Clear Time (g_c+I1), s	13.7	32.0	12.0	15.4	6.0	47.8	19.0	11.7
Green Ext Time (p_c), s	0.2	2.8	0.0	1.0	0.1	5.5	0.0	0.4

Intersection Summary	
HCM 2010 Ctrl Delay	44.5
HCM 2010 LOS	D

Notes

* HCM 2010 computational engine requires equal clearance times for the phases crossing the barrier.

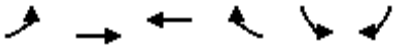

Movement	EBL	EBT	WBT	WBR	SBL	SBR
Lane Configurations						
Traffic Volume (veh/h)	243	1569	1080	324	239	111
Future Volume (veh/h)	243	1569	1080	324	239	111
Number	1	6	2	12	3	18
Initial Q (Qb), veh	0	0	0	0	0	0
Ped-Bike Adj(A_pbT)	1.00			1.00	1.00	1.00
Parking Bus, Adj	1.00	1.00	1.00	1.00	1.00	1.00
Adj Sat Flow, veh/h/ln	1863	1863	1863	1900	1863	1863
Adj Flow Rate, veh/h	279	1803	1213	364	249	116
Adj No. of Lanes	1	3	3	0	1	1
Peak Hour Factor	0.87	0.87	0.89	0.89	0.96	0.96
Percent Heavy Veh, %	2	2	2	2	2	2
Cap, veh/h	635	3954	1734	520	276	718
Arrive On Green	0.59	1.00	0.45	0.45	0.16	0.16
Sat Flow, veh/h	1774	5253	4051	1164	1774	1583
Grp Volume(v), veh/h	279	1803	1059	518	249	116
Grp Sat Flow(s),veh/h/ln	1774	1695	1695	1657	1774	1583
Q Serve(g_s), s	0.8	0.0	37.7	37.7	20.7	0.0
Cycle Q Clear(g_c), s	0.8	0.0	37.7	37.7	20.7	0.0
Prop In Lane	1.00			0.70	1.00	1.00
Lane Grp Cap(c), veh/h	635	3954	1514	740	276	718
V/C Ratio(X)	0.44	0.46	0.70	0.70	0.90	0.16
Avail Cap(c_a), veh/h	635	3954	1514	740	426	851
HCM Platoon Ratio	2.00	2.00	1.00	1.00	1.00	1.00
Upstream Filter(I)	0.69	0.69	1.00	1.00	1.00	1.00
Uniform Delay (d), s/veh	18.5	0.0	33.4	33.4	62.2	24.2
Incr Delay (d2), s/veh	0.2	0.3	2.7	5.4	13.7	0.1
Initial Q Delay(d3),s/veh	0.0	0.0	0.0	0.0	0.0	0.0
%ile BackOfQ(50%),veh/ln	4.7	0.1	18.2	18.4	11.2	2.8
LnGrp Delay(d),s/veh	18.7	0.3	36.1	38.9	75.8	24.3
LnGrp LOS	B	A	D	D	E	C
Approach Vol, veh/h		2082	1577		365	
Approach Delay, s/veh		2.7	37.0		59.4	
Approach LOS		A	D		E	

Timer	1	2	3	4	5	6	7	8
Assigned Phs	1	2				6		8
Phs Duration (G+Y+Rc), s	9.6	72.0				121.6		28.4
Change Period (Y+Rc), s	5.0	* 5				5.0		5.0
Max Green Setting (Gmax), s	4.6	* 67				104.0		36.0
Max Q Clear Time (g_c+I1), s	2.8	39.7				2.0		22.7
Green Ext Time (p_c), s	0.6	4.2				6.0		0.7

Intersection Summary	
HCM 2010 Ctrl Delay	21.3
HCM 2010 LOS	C

Notes

* HCM 2010 computational engine requires equal clearance times for the phases crossing the barrier.

Intersection	
Int Delay, s/veh	0.3

Movement	EBL	EBT	EBR	WBL	WBT	WBR	NBL	NBT	NBR	SBL	SBT	SBR
Lane Configurations												
Traffic Vol, veh/h	0	1808	0	0	1359	16	0	0	0	0	0	45
Future Vol, veh/h	0	1808	0	0	1359	16	0	0	0	0	0	45
Conflicting Peds, #/hr	0	0	0	0	0	0	0	0	0	0	0	0
Sign Control	Free	Free	Free	Free	Free	Free	Stop	Stop	Stop	Stop	Stop	Stop
RT Channelized	-	-	None	-	-	None	-	-	None	-	-	None
Storage Length	-	-	-	75	-	-	-	-	-	-	-	0
Veh in Median Storage, #	-	0	-	-	0	-	-	-	-	-	0	-
Grade, %	-	0	-	-	0	-	-	0	-	-	0	-
Peak Hour Factor	92	92	92	92	92	92	92	92	92	92	92	92
Heavy Vehicles, %	2	2	2	2	2	2	2	2	2	2	2	2
Mvmt Flow	0	1965	0	0	1477	17	0	0	0	0	0	49

Major/Minor	Major1			Major2						Minor2		
Conflicting Flow All	-	0	-	1965	0	0				-	-	747
Stage 1	-	-	-	-	-	-				-	-	-
Stage 2	-	-	-	-	-	-				-	-	-
Critical Hdwy	-	-	-	5.34	-	-				-	-	7.14
Critical Hdwy Stg 1	-	-	-	-	-	-				-	-	-
Critical Hdwy Stg 2	-	-	-	-	-	-				-	-	-
Follow-up Hdwy	-	-	-	3.12	-	-				-	-	3.92
Pot Cap-1 Maneuver	0	-	0	130	-	-				0	0	305
Stage 1	0	-	0	-	-	-				0	0	-
Stage 2	0	-	0	-	-	-				0	0	-
Platoon blocked, %		-			-	-						
Mov Cap-1 Maneuver	-	-	-	130	-	-				-	0	305
Mov Cap-2 Maneuver	-	-	-	-	-	-				-	0	-
Stage 1	-	-	-	-	-	-				-	0	-
Stage 2	-	-	-	-	-	-				-	0	-

Approach	EB	WB	SB
HCM Control Delay, s	0	0	19
HCM LOS			C

Minor Lane/Major Mvmt	EBT	WBL	WBT	WBR	SBLn1
Capacity (veh/h)	-	130	-	-	305
HCM Lane V/C Ratio	-	-	-	-	0.16
HCM Control Delay (s)	-	0	-	-	19
HCM Lane LOS	-	A	-	-	C
HCM 95th %tile Q(veh)	-	0	-	-	0.6

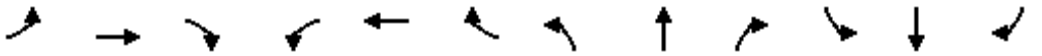

Movement	EBL	EBT	EBR	WBL	WBT	WBR	NBL	NBT	NBR	SBL	SBT	SBR
Lane Configurations												
Traffic Volume (vph)	194	1575	47	73	1253	115	69	18	78	60	4	53
Future Volume (vph)	194	1575	47	73	1253	115	69	18	78	60	4	53
Ideal Flow (vphpl)	1900	1900	1900	1900	1900	1900	1900	1900	1900	1900	1900	1900
Total Lost time (s)	6.0	6.0		6.0	6.0			7.0	7.0		7.0	7.0
Lane Util. Factor	1.00	0.91		1.00	0.91			1.00	1.00		1.00	1.00
Frt	1.00	1.00		1.00	0.99			1.00	0.85		1.00	0.85
Flt Protected	0.95	1.00		0.95	1.00			0.96	1.00		0.96	1.00
Satd. Flow (prot)	1770	5063		1770	5021			1791	1583		1779	1583
Flt Permitted	0.12	1.00		0.09	1.00			0.96	1.00		0.96	1.00
Satd. Flow (perm)	223	5063		163	5021			1791	1583		1779	1583
Peak-hour factor, PHF	0.88	0.88	0.88	0.95	0.95	0.95	0.77	0.77	0.77	0.55	0.55	0.55
Adj. Flow (vph)	220	1790	53	77	1319	121	90	23	101	109	7	96
RTOR Reduction (vph)	0	1	0	0	4	0	0	0	92	0	0	87
Lane Group Flow (vph)	220	1842	0	77	1436	0	0	113	9	0	116	9
Turn Type	pm+pt	NA		pm+pt	NA		Split	NA	Perm	Split	NA	Perm
Protected Phases	1	6		5	2		4	4		3	3	
Permitted Phases	6			2					4			3
Actuated Green, G (s)	127.2	112.8		109.1	100.7			16.2	16.2		16.6	16.6
Effective Green, g (s)	127.2	112.8		109.1	100.7			16.2	16.2		16.6	16.6
Actuated g/C Ratio	0.71	0.63		0.61	0.56			0.09	0.09		0.09	0.09
Clearance Time (s)	6.0	6.0		6.0	6.0			7.0	7.0		7.0	7.0
Vehicle Extension (s)	3.0	1.0		3.0	1.0			2.5	2.5		2.5	2.5
Lane Grp Cap (vph)	333	3172		173	2808			161	142		164	145
v/s Ratio Prot	c0.08	0.36		0.02	0.29			c0.06			c0.07	
v/s Ratio Perm	c0.39			0.25					0.01			0.01
v/c Ratio	0.66	0.58		0.45	0.51			0.70	0.06		0.71	0.06
Uniform Delay, d1	18.3	19.7		16.8	24.5			79.6	75.0		79.3	74.6
Progression Factor	1.00	1.00		1.00	1.00			1.00	1.00		1.00	1.00
Incremental Delay, d2	4.9	0.8		1.8	0.7			12.1	0.1		12.1	0.1
Delay (s)	23.2	20.5		18.6	25.1			91.6	75.1		91.5	74.7
Level of Service	C	C		B	C			F	E		F	E
Approach Delay (s)		20.8			24.8			83.8			83.9	
Approach LOS		C			C			F			F	

Intersection Summary			
HCM 2000 Control Delay	29.0	HCM 2000 Level of Service	C
HCM 2000 Volume to Capacity ratio	0.68		
Actuated Cycle Length (s)	180.0	Sum of lost time (s)	26.0
Intersection Capacity Utilization	64.8%	ICU Level of Service	C
Analysis Period (min)	15		

c Critical Lane Group

Movement	EBT	EBR	WBL	WBT	NBL	NBR
Lane Configurations						
Traffic Volume (veh/h)	1443	262	239	1192	249	334
Future Volume (veh/h)	1443	262	239	1192	249	334
Number	6	16	5	2	7	14
Initial Q (Qb), veh	0	0	0	0	0	0
Ped-Bike Adj(A_pbT)		1.00	1.00		1.00	1.00
Parking Bus, Adj	1.00	1.00	1.00	1.00	1.00	1.00
Adj Sat Flow, veh/h/ln	1863	1900	1863	1863	1863	1863
Adj Flow Rate, veh/h	1698	308	246	1229	283	380
Adj No. of Lanes	3	0	1	3	1	1
Peak Hour Factor	0.85	0.85	0.97	0.97	0.88	0.88
Percent Heavy Veh, %	2	2	2	2	2	2
Cap, veh/h	2110	380	494	3838	317	654
Arrive On Green	0.49	0.49	0.47	1.00	0.18	0.18
Sat Flow, veh/h	4503	780	1774	5253	1774	1583
Grp Volume(v), veh/h	1325	681	246	1229	283	380
Grp Sat Flow(s),veh/h/ln	1695	1725	1774	1695	1774	1583
Q Serve(g_s), s	49.4	50.2	6.2	0.0	23.4	0.0
Cycle Q Clear(g_c), s	49.4	50.2	6.2	0.0	23.4	0.0
Prop In Lane		0.45	1.00		1.00	1.00
Lane Grp Cap(c), veh/h	1650	840	494	3838	317	654
V/C Ratio(X)	0.80	0.81	0.50	0.32	0.89	0.58
Avail Cap(c_a), veh/h	1650	840	494	3838	438	762
HCM Platoon Ratio	1.00	1.00	2.00	2.00	1.00	1.00
Upstream Filter(I)	0.81	0.81	0.93	0.93	1.00	1.00
Uniform Delay (d), s/veh	32.4	32.7	29.9	0.0	60.2	34.0
Incr Delay (d2), s/veh	3.4	6.9	0.3	0.2	14.7	0.6
Initial Q Delay(d3),s/veh	0.0	0.0	0.0	0.0	0.0	0.0
%ile BackOfQ(50%),veh/ln	23.8	25.4	6.2	0.1	12.8	15.8
LnGrp Delay(d),s/veh	35.9	39.5	30.2	0.2	74.9	34.6
LnGrp LOS	D	D	C	A	E	C
Approach Vol, veh/h	2006			1475	663	
Approach Delay, s/veh	37.1			5.2	51.8	
Approach LOS	D			A	D	

Timer	1	2	3	4	5	6	7	8
Assigned Phs		2		4	5	6		
Phs Duration (G+Y+Rc), s		118.2		31.8	40.2	78.0		
Change Period (Y+Rc), s		5.0		5.0	5.0	* 5		
Max Green Setting (Gmax), s		103.0		37.0	27.0	* 73		
Max Q Clear Time (g_c+I1), s		2.0		25.4	8.2	52.2		
Green Ext Time (p_c), s		3.4		1.4	0.3	5.7		

Intersection Summary	
HCM 2010 Ctrl Delay	28.1
HCM 2010 LOS	C

Notes

* HCM 2010 computational engine requires equal clearance times for the phases crossing the barrier.

Movement	EBL	EBT	EBR	WBL	WBT	WBR	NBL	NBT	NBR	SBL	SBT	SBR
Lane Configurations												
Traffic Volume (veh/h)	80	1388	309	123	1306	24	104	1	92	12	3	21
Future Volume (veh/h)	80	1388	309	123	1306	24	104	1	92	12	3	21
Number	1	6	16	5	2	12	7	4	14	3	8	18
Initial Q (Qb), veh	0	0	0	0	0	0	0	0	0	0	0	0
Ped-Bike Adj(A_pbT)	1.00		1.00	1.00		1.00	1.00		1.00	1.00		1.00
Parking Bus, Adj	1.00	1.00	1.00	1.00	1.00	1.00	1.00	1.00	1.00	1.00	1.00	1.00
Adj Sat Flow, veh/h/ln	1863	1863	1900	1863	1863	1900	1863	1863	1900	1900	1863	1900
Adj Flow Rate, veh/h	100	1735	386	127	1346	25	130	1	115	17	4	29
Adj No. of Lanes	1	3	0	2	3	0	2	1	0	0	1	0
Peak Hour Factor	0.80	0.80	0.80	0.97	0.97	0.97	0.80	0.80	0.80	0.72	0.72	0.72
Percent Heavy Veh, %	2	2	2	2	2	2	2	2	2	2	2	2
Cap, veh/h	499	3222	707	417	3153	59	273	1	150	44	20	44
Arrive On Green	0.34	1.00	1.00	0.01	0.20	0.20	0.10	0.10	0.10	0.10	0.10	0.10
Sat Flow, veh/h	1774	4176	916	3442	5141	95	2658	14	1572	125	213	466
Grp Volume(v), veh/h	100	1404	717	127	888	483	130	0	116	50	0	0
Grp Sat Flow(s),veh/h/ln	1774	1695	1701	1721	1695	1846	1329	0	1585	804	0	0
Q Serve(g_s), s	0.0	0.0	0.0	2.3	34.3	34.3	0.0	0.0	10.7	0.8	0.0	0.0
Cycle Q Clear(g_c), s	0.0	0.0	0.0	2.3	34.3	34.3	11.4	0.0	10.7	11.5	0.0	0.0
Prop In Lane	1.00		0.54	1.00		0.05	1.00		0.99	0.34		0.58
Lane Grp Cap(c), veh/h	499	2616	1313	417	2079	1132	273	0	151	109	0	0
V/C Ratio(X)	0.20	0.54	0.55	0.30	0.43	0.43	0.48	0.00	0.77	0.46	0.00	0.00
Avail Cap(c_a), veh/h	499	2616	1313	532	2079	1132	570	0	328	273	0	0
HCM Platoon Ratio	2.00	2.00	2.00	0.33	0.33	0.33	1.00	1.00	1.00	1.00	1.00	1.00
Upstream Filter(I)	0.62	0.62	0.62	1.00	1.00	1.00	1.00	0.00	1.00	1.00	0.00	0.00
Uniform Delay (d), s/veh	15.6	0.0	0.0	12.3	36.8	36.8	66.6	0.0	66.3	64.2	0.0	0.0
Incr Delay (d2), s/veh	0.0	0.5	1.0	0.2	0.6	1.2	1.0	0.0	6.0	2.2	0.0	0.0
Initial Q Delay(d3),s/veh	0.0	0.0	0.0	0.0	0.0	0.0	0.0	0.0	0.0	0.0	0.0	0.0
%ile BackOfQ(50%),veh/ln	1.9	0.2	0.4	1.1	16.3	17.9	2.7	0.0	5.0	2.1	0.0	0.0
LnGrp Delay(d),s/veh	15.6	0.5	1.0	12.5	37.4	38.0	67.5	0.0	72.3	66.4	0.0	0.0
LnGrp LOS	B	A	A	B	D	D	E		E	E		
Approach Vol, veh/h		2221			1498			246			50	
Approach Delay, s/veh		1.3			35.5			69.8			66.4	
Approach LOS		A			D			E			E	

Timer	1	2	3	4	5	6	7	8
Assigned Phs	1	2		4	5	6		8
Phs Duration (G+Y+Rc), s	11.7	98.0		20.3	8.0	121.8		20.3
Change Period (Y+Rc), s	6.0	* 6		6.0	3.0	6.0		6.0
Max Green Setting (Gmax), s	12.0	* 92		31.0	10.0	94.0		31.0
Max Q Clear Time (g_c+I1), s	2.0	36.3		13.4	4.3	2.0		13.5
Green Ext Time (p_c), s	0.1	3.3		0.8	0.1	6.9		0.1

Intersection Summary	
HCM 2010 Ctrl Delay	19.1
HCM 2010 LOS	B

Notes

* HCM 2010 computational engine requires equal clearance times for the phases crossing the barrier.

Movement	EBL	EBT	EBR	WBL	WBT	WBR	NBL	NBT	NBR	SBL	SBT	SBR
Lane Configurations												
Traffic Volume (veh/h)	7	1223	262	370	1268	8	174	0	235	4	5	11
Future Volume (veh/h)	7	1223	262	370	1268	8	174	0	235	4	5	11
Number	1	6	16	5	2	12	7	4	14	3	8	18
Initial Q (Qb), veh	0	0	0	0	0	0	0	0	0	0	0	0
Ped-Bike Adj(A_pbT)	1.00		1.00	1.00		1.00	1.00		1.00	1.00		1.00
Parking Bus, Adj	1.00	1.00	1.00	1.00	1.00	1.00	1.00	1.00	1.00	1.00	1.00	1.00
Adj Sat Flow, veh/h/ln	1863	1863	1900	1863	1863	1900	1863	1863	1863	1900	1863	1900
Adj Flow Rate, veh/h	8	1359	291	374	1281	8	193	0	261	7	9	20
Adj No. of Lanes	1	3	0	1	3	0	1	1	1	0	1	0
Peak Hour Factor	0.90	0.90	0.90	0.99	0.99	0.99	0.90	0.90	0.90	0.55	0.55	0.55
Percent Heavy Veh, %	2	2	2	2	2	2	2	2	2	2	2	2
Cap, veh/h	227	1767	378	543	3739	23	353	404	344	77	102	188
Arrive On Green	0.14	0.14	0.14	0.53	1.00	1.00	0.22	0.00	0.22	0.22	0.22	0.22
Sat Flow, veh/h	427	4197	898	1774	5215	33	1375	1863	1583	223	470	867
Grp Volume(v), veh/h	8	1097	553	374	833	456	193	0	261	36	0	0
Grp Sat Flow(s),veh/h/ln	427	1695	1704	1774	1695	1857	1375	1863	1583	1560	0	0
Q Serve(g_s), s	2.5	47.4	47.5	15.0	0.0	0.0	16.0	0.0	23.5	0.0	0.0	0.0
Cycle Q Clear(g_c), s	2.5	47.4	47.5	15.0	0.0	0.0	18.6	0.0	23.5	2.6	0.0	0.0
Prop In Lane	1.00		0.53	1.00		0.02	1.00		1.00	0.19		0.56
Lane Grp Cap(c), veh/h	227	1427	718	543	2431	1332	353	404	344	367	0	0
V/C Ratio(X)	0.04	0.77	0.77	0.69	0.34	0.34	0.55	0.00	0.76	0.10	0.00	0.00
Avail Cap(c_a), veh/h	227	1427	718	543	2431	1332	353	404	344	367	0	0
HCM Platoon Ratio	0.33	0.33	0.33	2.00	2.00	2.00	1.00	1.00	1.00	1.00	1.00	1.00
Upstream Filter(I)	1.00	1.00	1.00	1.00	1.00	1.00	1.00	0.00	1.00	1.00	0.00	0.00
Uniform Delay (d), s/veh	38.9	58.3	58.3	28.0	0.0	0.0	53.6	0.0	55.8	47.6	0.0	0.0
Incr Delay (d2), s/veh	0.3	4.0	7.8	7.0	0.4	0.7	6.0	0.0	14.6	0.5	0.0	0.0
Initial Q Delay(d3),s/veh	0.0	0.0	0.0	0.0	0.0	0.0	0.0	0.0	0.0	0.0	0.0	0.0
%ile BackOfQ(50%),veh/ln	0.3	23.1	24.0	11.4	0.1	0.3	7.9	0.0	11.7	1.3	0.0	0.0
LnGrp Delay(d),s/veh	39.2	62.3	66.1	35.0	0.4	0.7	59.6	0.0	70.3	48.1	0.0	0.0
LnGrp LOS	D	E	E	C	A	A	E		E	D		
Approach Vol, veh/h		1658			1663			454			36	
Approach Delay, s/veh		63.5			8.3			65.8			48.1	
Approach LOS		E			A			E			D	

Timer	1	2	3	4	5	6	7	8
Assigned Phs		2		4	5	6		8
Phs Duration (G+Y+Rc), s		114.0		38.0	45.0	69.0		38.0
Change Period (Y+Rc), s		5.0		5.0	5.0	* 5		5.0
Max Green Setting (Gmax), s		107.0		33.0	40.0	* 64		33.0
Max Q Clear Time (g_c+I1), s		2.0		25.5	17.0	49.5		4.6
Green Ext Time (p_c), s		3.0		1.0	0.5	4.0		0.1

Intersection Summary		
HCM 2010 Ctrl Delay		39.5
HCM 2010 LOS		D

Notes

* HCM 2010 computational engine requires equal clearance times for the phases crossing the barrier.

Movement	EBL	EBT	EBR	WBL	WBT	WBR	NBL	NBT	NBR	SBL	SBT	SBR
Lane Configurations												
Traffic Volume (veh/h)	70	1392	0	45	1581	225	2	0	34	112	0	63
Future Volume (veh/h)	70	1392	0	45	1581	225	2	0	34	112	0	63
Number	1	6	16	5	2	12	7	4	14	3	8	18
Initial Q (Qb), veh	0	0	0	0	0	0	0	0	0	0	0	0
Ped-Bike Adj(A_pbT)	1.00		1.00	1.00		1.00	1.00		1.00	1.00		1.00
Parking Bus, Adj	1.00	1.00	1.00	1.00	1.00	1.00	1.00	1.00	1.00	1.00	1.00	1.00
Adj Sat Flow, veh/h/ln	1863	1863	1900	1863	1863	1900	1900	1863	1900	1863	1863	1900
Adj Flow Rate, veh/h	77	1530	0	47	1664	237	2	0	40	123	0	69
Adj No. of Lanes	1	3	0	1	3	0	0	1	0	1	1	0
Peak Hour Factor	0.91	0.91	0.91	0.95	0.95	0.95	0.84	0.84	0.84	0.91	0.91	0.91
Percent Heavy Veh, %	2	2	2	2	2	2	2	2	2	2	2	2
Cap, veh/h	272	3279	0	321	2725	386	30	11	328	352	0	344
Arrive On Green	0.16	1.00	0.00	0.05	0.61	0.61	0.22	0.00	0.22	0.22	0.00	0.22
Sat Flow, veh/h	1774	5253	0	1774	4502	639	25	51	1511	1362	0	1583
Grp Volume(v), veh/h	77	1530	0	47	1251	650	42	0	0	123	0	69
Grp Sat Flow(s),veh/h/ln	1774	1695	0	1774	1695	1750	1586	0	0	1362	0	1583
Q Serve(g_s), s	0.0	0.0	0.0	1.7	35.1	35.4	0.0	0.0	0.0	7.5	0.0	5.4
Cycle Q Clear(g_c), s	0.0	0.0	0.0	1.7	35.1	35.4	3.2	0.0	0.0	10.7	0.0	5.4
Prop In Lane	1.00		0.00	1.00		0.36	0.05		0.95	1.00		1.00
Lane Grp Cap(c), veh/h	272	3279	0	321	2052	1059	369	0	0	352	0	344
V/C Ratio(X)	0.28	0.47	0.00	0.15	0.61	0.61	0.11	0.00	0.00	0.35	0.00	0.20
Avail Cap(c_a), veh/h	272	3279	0	321	2052	1059	369	0	0	352	0	344
HCM Platoon Ratio	2.00	2.00	2.00	1.00	1.00	1.00	1.00	1.00	1.00	1.00	1.00	1.00
Upstream Filter(I)	1.00	1.00	0.00	1.00	1.00	1.00	1.00	0.00	0.00	1.00	0.00	1.00
Uniform Delay (d), s/veh	31.3	0.0	0.0	12.6	18.8	18.8	47.8	0.0	0.0	50.5	0.0	48.7
Incr Delay (d2), s/veh	2.6	0.5	0.0	1.0	1.4	2.7	0.6	0.0	0.0	2.7	0.0	1.3
Initial Q Delay(d3),s/veh	0.0	0.0	0.0	0.0	0.0	0.0	0.0	0.0	0.0	0.0	0.0	0.0
%ile BackOfQ(50%),veh/ln	2.6	0.1	0.0	0.9	16.7	17.7	1.5	0.0	0.0	4.7	0.0	2.5
LnGrp Delay(d),s/veh	33.8	0.5	0.0	13.5	20.1	21.5	48.5	0.0	0.0	53.2	0.0	50.0
LnGrp LOS	C	A		B	C	C	D			D		D
Approach Vol, veh/h		1607			1948			42			192	
Approach Delay, s/veh		2.1			20.4			48.5			52.1	
Approach LOS		A			C			D			D	

Timer	1	2	3	4	5	6	7	8
Assigned Phs	1	2		4	5	6		8
Phs Duration (G+Y+Rc), s	17.0	97.0		38.0	11.0	103.0		38.0
Change Period (Y+Rc), s	5.0	* 5		5.0	3.0	5.0		5.0
Max Green Setting (Gmax), s	12.0	* 92		33.0	8.0	96.0		33.0
Max Q Clear Time (g_c+I1), s	2.0	37.4		5.2	3.7	2.0		12.7
Green Ext Time (p_c), s	0.0	5.6		0.1	0.0	4.6		0.5

Intersection Summary	
HCM 2010 Ctrl Delay	14.6
HCM 2010 LOS	B

Notes

* HCM 2010 computational engine requires equal clearance times for the phases crossing the barrier.

Movement	EBL	EBT	EBR	WBL	WBT	WBR	NBL	NBT	NBR	SBL	SBT	SBR
Lane Configurations												
Traffic Volume (veh/h)	479	964	145	388	1141	143	349	924	302	221	961	368
Future Volume (veh/h)	479	964	145	388	1141	143	349	924	302	221	961	368
Number	3	8	18	7	4	14	1	6	16	5	2	12
Initial Q (Qb), veh	0	0	0	0	0	0	0	0	0	0	0	0
Ped-Bike Adj(A_pbT)	1.00		1.00	1.00		1.00	1.00		1.00	1.00		1.00
Parking Bus, Adj	1.00	1.00	1.00	1.00	1.00	1.00	1.00	1.00	1.00	1.00	1.00	1.00
Adj Sat Flow, veh/h/ln	1863	1863	1900	1863	1863	1900	1863	1863	1900	1863	1863	1863
Adj Flow Rate, veh/h	538	1083	163	413	1214	152	379	1004	328	243	1056	404
Adj No. of Lanes	2	3	0	2	3	0	2	3	0	2	3	1
Peak Hour Factor	0.89	0.89	0.89	0.94	0.94	0.94	0.92	0.92	0.92	0.91	0.91	0.91
Percent Heavy Veh, %	2	2	2	2	2	2	2	2	2	2	2	2
Cap, veh/h	541	1316	198	461	1243	156	393	1308	427	289	1598	746
Arrive On Green	0.16	0.29	0.29	0.13	0.27	0.27	0.11	0.34	0.34	0.08	0.31	0.31
Sat Flow, veh/h	3442	4463	671	3442	4579	573	3442	3795	1239	3442	5085	1583
Grp Volume(v), veh/h	538	822	424	413	899	467	379	897	435	243	1056	404
Grp Sat Flow(s),veh/h/ln	1721	1695	1744	1721	1695	1762	1721	1695	1644	1721	1695	1583
Q Serve(g_s), s	21.9	31.6	31.7	16.5	36.8	36.8	15.3	33.0	33.0	9.7	25.2	25.3
Cycle Q Clear(g_c), s	21.9	31.6	31.7	16.5	36.8	36.8	15.3	33.0	33.0	9.7	25.2	25.3
Prop In Lane	1.00		0.38	1.00		0.33	1.00		0.75	1.00		1.00
Lane Grp Cap(c), veh/h	541	999	514	461	920	478	393	1168	567	289	1598	746
V/C Ratio(X)	0.99	0.82	0.82	0.90	0.98	0.98	0.96	0.77	0.77	0.84	0.66	0.54
Avail Cap(c_a), veh/h	541	999	514	492	920	478	393	1168	567	295	1598	746
HCM Platoon Ratio	1.00	1.00	1.00	1.00	1.00	1.00	1.00	1.00	1.00	1.00	1.00	1.00
Upstream Filter(I)	1.00	1.00	1.00	1.00	1.00	1.00	1.00	1.00	1.00	1.00	1.00	1.00
Uniform Delay (d), s/veh	58.9	46.0	46.0	59.7	50.6	50.6	61.7	40.9	40.9	63.2	41.5	26.3
Incr Delay (d2), s/veh	37.3	5.6	10.5	17.9	24.0	35.1	35.6	4.9	9.6	17.8	2.2	2.8
Initial Q Delay(d3),s/veh	0.0	0.0	0.0	0.0	0.0	0.0	0.0	0.0	0.0	0.0	0.0	0.0
%ile BackOfQ(50%),veh/ln	13.2	15.6	16.8	9.0	20.3	22.6	9.3	16.2	16.5	5.3	12.1	11.7
LnGrp Delay(d),s/veh	96.2	51.6	56.5	77.6	74.6	85.7	97.3	45.7	50.5	81.0	43.7	29.1
LnGrp LOS	F	D	E	E	E	F	F	D	D	F	D	C
Approach Vol, veh/h		1784			1779			1711			1703	
Approach Delay, s/veh		66.2			78.2			58.4			45.6	
Approach LOS		E			E			E			D	

Timer	1	2	3	4	5	6	7	8
Assigned Phs	1	2	3	4	5	6	7	8
Phs Duration (G+Y+Rc), s	20.0	50.0	26.0	44.0	15.8	54.2	22.7	47.3
Change Period (Y+Rc), s	4.0	6.0	4.0	6.0	4.0	6.0	4.0	6.0
Max Green Setting (Gmax), s	16.0	44.0	22.0	38.0	12.0	48.0	20.0	40.0
Max Q Clear Time (g_c+I1), s	17.3	27.3	23.9	38.8	11.7	35.0	18.5	33.7
Green Ext Time (p_c), s	0.0	2.8	0.0	0.0	0.0	3.0	0.2	3.8

Intersection Summary	
HCM 2010 Ctrl Delay	62.3
HCM 2010 LOS	E

Movement	EBL	EBT	EBR	WBL	WBT	WBR	NBL	NBT	NBR	SBL	SBT	SBR
Lane Configurations												
Traffic Volume (veh/h)	212	1218	44	0	1283	166	187	76	7	91	30	188
Future Volume (veh/h)	212	1218	44	0	1283	166	187	76	7	91	30	188
Number	1	6	16	5	2	12	7	4	14	3	8	18
Initial Q (Qb), veh	0	0	0	0	0	0	0	0	0	0	0	0
Ped-Bike Adj(A_pbT)	1.00		1.00	1.00		1.00	1.00		1.00	1.00		1.00
Parking Bus, Adj	1.00	1.00	1.00	1.00	1.00	1.00	1.00	1.00	1.00	1.00	1.00	1.00
Adj Sat Flow, veh/h/ln	1863	1863	1900	0	1863	1900	1863	1863	1863	1863	1863	1863
Adj Flow Rate, veh/h	236	1353	49	0	1395	180	234	95	9	99	33	204
Adj No. of Lanes	1	3	0	0	3	0	1	1	1	1	1	1
Peak Hour Factor	0.90	0.90	0.90	0.92	0.92	0.92	0.80	0.80	0.80	0.92	0.92	0.92
Percent Heavy Veh, %	2	2	2	0	2	2	2	2	2	2	2	2
Cap, veh/h	282	3388	123	0	2612	337	336	342	290	188	197	272
Arrive On Green	0.07	0.67	0.67	0.00	0.57	0.57	0.12	0.18	0.18	0.04	0.11	0.11
Sat Flow, veh/h	1774	5038	182	0	4728	588	1774	1863	1583	1774	1863	1583
Grp Volume(v), veh/h	236	910	492	0	1037	538	234	95	9	99	33	204
Grp Sat Flow(s),veh/h/ln	1774	1695	1831	0	1695	1759	1774	1863	1583	1774	1863	1583
Q Serve(g_s), s	9.7	21.6	21.6	0.0	33.9	33.9	9.1	7.9	0.8	0.0	2.9	16.1
Cycle Q Clear(g_c), s	9.7	21.6	21.6	0.0	33.9	33.9	9.1	7.9	0.8	0.0	2.9	16.1
Prop In Lane	1.00		0.10	0.00		0.33	1.00		1.00	1.00		1.00
Lane Grp Cap(c), veh/h	282	2280	1231	0	1942	1007	336	342	290	188	197	272
V/C Ratio(X)	0.84	0.40	0.40	0.00	0.53	0.53	0.70	0.28	0.03	0.53	0.17	0.75
Avail Cap(c_a), veh/h	519	2280	1231	0	1942	1007	366	342	290	218	197	272
HCM Platoon Ratio	1.00	1.00	1.00	1.00	1.00	1.00	1.00	1.00	1.00	1.00	1.00	1.00
Upstream Filter(I)	1.00	1.00	1.00	0.00	1.00	1.00	1.00	1.00	1.00	1.00	1.00	1.00
Uniform Delay (d), s/veh	25.1	13.2	13.2	0.0	23.7	23.7	69.1	63.3	60.4	78.7	73.3	40.3
Incr Delay (d2), s/veh	2.5	0.5	1.0	0.0	1.1	2.0	4.0	2.0	0.2	0.9	1.8	17.1
Initial Q Delay(d3),s/veh	0.0	0.0	0.0	0.0	0.0	0.0	0.0	0.0	0.0	0.0	0.0	0.0
%ile BackOfQ(50%),veh/ln	7.1	10.3	11.3	0.0	16.1	17.0	11.3	4.3	0.4	4.8	1.6	8.3
LnGrp Delay(d),s/veh	27.6	13.7	14.2	0.0	24.7	25.7	73.1	65.3	60.6	79.6	75.1	57.4
LnGrp LOS	C	B	B		C	C	E	E	E	E	E	E
Approach Vol, veh/h		1638			1575			338			336	
Approach Delay, s/veh		15.9			25.1			70.6			65.7	
Approach LOS		B			C			E			E	

Timer	1	2	3	4	5	6	7	8
Assigned Phs	1	2	3	4		6	7	8
Phs Duration (G+Y+Rc), s	18.0	109.1	13.0	40.0		127.0	27.0	26.0
Change Period (Y+Rc), s	6.0	6.0	6.0	7.0		6.0	6.0	7.0
Max Green Setting (Gmax), s	36.0	76.0	10.0	33.0		118.0	24.0	19.0
Max Q Clear Time (g_c+I1), s	11.7	35.9	2.0	9.9		23.6	11.1	18.1
Green Ext Time (p_c), s	0.3	4.1	0.1	0.4		3.4	0.3	0.1

Intersection Summary	
HCM 2010 Ctrl Delay	28.7
HCM 2010 LOS	C

Intersection	
Int Delay, s/veh	3.4

Movement	EBL	EBT	EBR	WBL	WBT	WBR	NBL	NBT	NBR	SBL	SBT	SBR
Lane Configurations												
Traffic Vol, veh/h	18	1089	209	65	1379	29	0	0	195	0	0	70
Future Vol, veh/h	18	1089	209	65	1379	29	0	0	195	0	0	70
Conflicting Peds, #/hr	0	0	0	0	0	0	0	0	0	0	0	0
Sign Control	Free	Free	Free	Free	Free	Free	Stop	Stop	Stop	Stop	Stop	Stop
RT Channelized	-	-	None	-	-	None	-	-	None	-	-	None
Storage Length	-	-	-	300	-	-	-	-	0	-	-	0
Veh in Median Storage, #	-	0	-	-	0	-	-	0	-	-	0	-
Grade, %	-	0	-	-	0	-	-	0	-	-	0	-
Peak Hour Factor	92	92	92	92	92	92	92	92	92	92	92	92
Heavy Vehicles, %	2	2	2	2	2	2	2	2	2	2	2	2
Mvmt Flow	20	1184	227	71	1499	32	0	0	212	0	0	76

Major/Minor	Major1			Major2			Minor1			Minor2		
Conflicting Flow All	1531	0	0	1411	0	0	-	-	706	-	-	766
Stage 1	-	-	-	-	-	-	-	-	-	-	-	-
Stage 2	-	-	-	-	-	-	-	-	-	-	-	-
Critical Hdwy	5.34	-	-	5.34	-	-	-	-	7.14	-	-	7.14
Critical Hdwy Stg 1	-	-	-	-	-	-	-	-	-	-	-	-
Critical Hdwy Stg 2	-	-	-	-	-	-	-	-	-	-	-	-
Follow-up Hdwy	3.12	-	-	3.12	-	-	-	-	3.92	-	-	3.92
Pot Cap-1 Maneuver	215	-	-	247	-	-	0	0	324	0	0	296
Stage 1	-	-	-	-	-	-	0	0	-	0	0	-
Stage 2	-	-	-	-	-	-	0	0	-	0	0	-
Platoon blocked, %		-	-		-	-						
Mov Cap-1 Maneuver	215	-	-	247	-	-	-	-	324	-	-	296
Mov Cap-2 Maneuver	-	-	-	-	-	-	-	-	-	-	-	-
Stage 1	-	-	-	-	-	-	-	-	-	-	-	-
Stage 2	-	-	-	-	-	-	-	-	-	-	-	-

Approach	EB	WB	NB	SB
HCM Control Delay, s	0.3	1.1	34.9	21.3
HCM LOS			D	C

Minor Lane/Major Mvmt	NBLn1	EBL	EBT	EBR	WBL	WBT	WBR	SBLn1
Capacity (veh/h)	324	215	-	-	247	-	-	296
HCM Lane V/C Ratio	0.654	0.091	-	-	0.286	-	-	0.257
HCM Control Delay (s)	34.9	23.4	-	-	25.3	-	-	21.3
HCM Lane LOS	D	C	-	-	D	-	-	C
HCM 95th %tile Q(veh)	4.3	0.3	-	-	1.1	-	-	1

Intersection	
Int Delay, s/veh	23

Movement	EBT	EBR	WBL	WBT	NBL	NBR
Lane Configurations						
Traffic Vol, veh/h	1170	114	78	1372	101	124
Future Vol, veh/h	1170	114	78	1372	101	124
Conflicting Peds, #/hr	0	0	0	0	0	0
Sign Control	Free	Free	Free	Free	Stop	Stop
RT Channelized	-	None	-	None	-	None
Storage Length	-	-	200	-	0	0
Veh in Median Storage, #	0	-	-	0	0	-
Grade, %	0	-	-	0	0	-
Peak Hour Factor	92	92	92	92	92	92
Heavy Vehicles, %	2	2	2	2	2	2
Mvmt Flow	1272	124	85	1491	110	135

Major/Minor	Major1		Major2		Minor1	
Conflicting Flow All	0	0	1396	0	2100	698
Stage 1	-	-	-	-	1334	-
Stage 2	-	-	-	-	766	-
Critical Hdwy	-	-	5.34	-	5.74	7.14
Critical Hdwy Stg 1	-	-	-	-	6.64	-
Critical Hdwy Stg 2	-	-	-	-	6.04	-
Follow-up Hdwy	-	-	3.12	-	3.82	3.92
Pot Cap-1 Maneuver	-	-	251	-	~ 83	328
Stage 1	-	-	-	-	150	-
Stage 2	-	-	-	-	381	-
Platoon blocked, %	-	-		-		
Mov Cap-1 Maneuver	-	-	251	-	~ 55	328
Mov Cap-2 Maneuver	-	-	-	-	~ 55	-
Stage 1	-	-	-	-	150	-
Stage 2	-	-	-	-	252	-

Approach	EB	WB	NB
HCM Control Delay, s	0	1.4	293.3
HCM LOS			F

Minor Lane/Major Mvmt	NBLn1	NBLn2	EBT	EBR	WBL	WBT
Capacity (veh/h)	55	328	-	-	251	-
HCM Lane V/C Ratio	1.996	0.411	-	-	0.338	-
HCM Control Delay (s)	$ 624.7	23.4	-	-	26.5	-
HCM Lane LOS	F	C	-	-	D	-
HCM 95th %tile Q(veh)	10.7	1.9	-	-	1.4	-

Notes			
~: Volume exceeds capacity	$: Delay exceeds 300s	+: Computation Not Defined	*: All major volume in platoon

Movement	EBL	EBT	EBR	WBL	WBT	WBR	NBL	NBT	NBR	SBL	SBT	SBR
Lane Configurations												
Traffic Volume (veh/h)	438	629	227	276	594	379	591	1638	327	355	1088	265
Future Volume (veh/h)	438	629	227	276	594	379	591	1638	327	355	1088	265
Number	3	8	18	7	4	14	1	6	16	5	2	12
Initial Q (Qb), veh	0	0	0	0	0	0	0	0	0	0	0	0
Ped-Bike Adj(A_pbT)	1.00		1.00	1.00		1.00	1.00		1.00	1.00		1.00
Parking Bus, Adj	1.00	1.00	1.00	1.00	1.00	1.00	1.00	1.00	1.00	1.00	1.00	1.00
Adj Sat Flow, veh/h/ln	1863	1863	1863	1863	1863	1863	1863	1863	1900	1863	1863	1863
Adj Flow Rate, veh/h	471	676	244	321	691	441	730	2022	404	366	1122	273
Adj No. of Lanes	2	3	1	2	3	1	2	3	0	2	3	1
Peak Hour Factor	0.93	0.93	0.93	0.86	0.86	0.86	0.81	0.81	0.81	0.97	0.97	0.97
Percent Heavy Veh, %	2	2	2	2	2	2	2	2	2	2	2	2
Cap, veh/h	482	776	597	456	737	413	774	2090	406	399	1934	824
Arrive On Green	0.14	0.15	0.15	0.13	0.14	0.14	0.22	0.49	0.49	0.12	0.38	0.38
Sat Flow, veh/h	3442	5085	1583	3442	5085	1583	3442	4275	831	3442	5085	1583
Grp Volume(v), veh/h	471	676	244	321	691	441	730	1592	834	366	1122	273
Grp Sat Flow(s),veh/h/ln	1721	1695	1583	1721	1695	1583	1721	1695	1716	1721	1695	1583
Q Serve(g_s), s	27.3	26.0	14.9	17.8	26.9	29.0	41.7	90.4	96.7	21.0	35.1	10.4
Cycle Q Clear(g_c), s	27.3	26.0	14.9	17.8	26.9	29.0	41.7	90.4	96.7	21.0	35.1	10.4
Prop In Lane	1.00		1.00	1.00		1.00	1.00		0.48	1.00		1.00
Lane Grp Cap(c), veh/h	482	776	597	456	737	413	774	1658	839	399	1934	824
V/C Ratio(X)	0.98	0.87	0.41	0.70	0.94	1.07	0.94	0.96	0.99	0.92	0.58	0.33
Avail Cap(c_a), veh/h	482	890	633	456	737	413	912	1658	839	430	1934	824
HCM Platoon Ratio	1.00	1.00	1.00	1.00	1.00	1.00	1.00	1.00	1.00	1.00	1.00	1.00
Upstream Filter(I)	1.00	1.00	1.00	1.00	1.00	1.00	1.00	1.00	1.00	1.00	1.00	1.00
Uniform Delay (d), s/veh	85.7	82.8	22.8	83.0	84.6	45.0	76.3	49.2	50.8	87.4	49.3	11.2
Incr Delay (d2), s/veh	35.0	8.2	0.3	4.2	19.3	63.2	15.4	14.5	29.8	22.4	1.3	1.1
Initial Q Delay(d3),s/veh	0.0	0.0	0.0	0.0	0.0	0.0	0.0	0.0	0.0	0.0	0.0	0.0
%ile BackOfQ(50%),veh/ln	15.4	12.8	6.6	8.8	13.9	28.4	21.5	45.6	52.8	11.3	16.6	4.8
LnGrp Delay(d),s/veh	120.6	91.0	23.2	87.2	103.9	108.2	91.7	63.7	80.6	109.8	50.6	12.3
LnGrp LOS	F	F	C	F	F	F	F	E	F	F	D	B
Approach Vol, veh/h		1391			1453			3156			1761	
Approach Delay, s/veh		89.2			101.5			74.6			57.0	
Approach LOS		F			F			E			E	

Timer	1	2	3	4	5	6	7	8
Assigned Phs	1	2	3	4	5	6	7	8
Phs Duration (G+Y+Rc), s	50.0	82.0	33.0	35.0	28.2	103.8	31.5	36.5
Change Period (Y+Rc), s	5.0	6.0	5.0	6.0	5.0	6.0	5.0	6.0
Max Green Setting (Gmax), s	53.0	68.0	28.0	29.0	25.0	96.0	22.0	35.0
Max Q Clear Time (g_c+I1), s	43.7	37.1	29.3	31.0	23.0	98.7	19.8	28.0
Green Ext Time (p_c), s	1.2	3.6	0.0	0.0	0.2	0.0	0.2	2.5

Intersection Summary	
HCM 2010 Ctrl Delay	78.3
HCM 2010 LOS	E

Build 2040

Movement	EBL	EBT	EBR	WBL	WBT	WBR	NBL	NBT	NBR	SBL	SBT	SBR
Lane Configurations												
Traffic Volume (veh/h)	292	931	454	325	2543	104	861	376	241	109	349	913
Future Volume (veh/h)	292	931	454	325	2543	104	861	376	241	109	349	913
Number	1	6	16	5	2	12	7	4	14	3	8	18
Initial Q (Qb), veh	0	0	0	0	0	0	0	0	0	0	0	0
Ped-Bike Adj(A_pbT)	1.00		1.00	1.00		1.00	1.00		1.00	1.00		1.00
Parking Bus, Adj	1.00	1.00	1.00	1.00	1.00	1.00	1.00	1.00	1.00	1.00	1.00	1.00
Adj Sat Flow, veh/h/ln	1863	1863	1863	1863	1863	1900	1863	1863	1900	1863	1863	1863
Adj Flow Rate, veh/h	317	1012	493	342	2677	109	926	404	259	118	379	992
Adj No. of Lanes	2	3	2	2	3	0	2	2	0	1	2	2
Peak Hour Factor	0.92	0.92	0.92	0.95	0.95	0.95	0.93	0.93	0.93	0.92	0.92	0.92
Percent Heavy Veh, %	2	2	2	2	2	2	2	2	2	2	2	2
Cap, veh/h	268	2147	1564	593	2201	89	638	572	363	228	708	774
Arrive On Green	0.08	0.42	0.42	0.09	0.44	0.44	0.14	0.28	0.28	0.06	0.20	0.20
Sat Flow, veh/h	3442	5085	2787	3442	5015	202	3442	2080	1319	1774	3539	2787
Grp Volume(v), veh/h	317	1012	493	342	1800	986	926	343	320	118	379	992
Grp Sat Flow(s),veh/h/ln	1721	1695	1393	1721	1695	1827	1721	1770	1630	1774	1770	1393
Q Serve(g_s), s	14.0	25.8	9.2	2.5	79.0	79.0	25.0	31.4	31.9	9.4	17.3	31.0
Cycle Q Clear(g_c), s	14.0	25.8	9.2	2.5	79.0	79.0	25.0	31.4	31.9	9.4	17.3	31.0
Prop In Lane	1.00		1.00	1.00		0.11	1.00		0.81	1.00		1.00
Lane Grp Cap(c), veh/h	268	2147	1564	593	1488	802	638	487	449	228	708	774
V/C Ratio(X)	1.18	0.47	0.32	0.58	1.21	1.23	1.45	0.70	0.71	0.52	0.54	1.28
Avail Cap(c_a), veh/h	268	2147	1564	593	1488	802	638	487	449	244	708	774
HCM Platoon Ratio	1.00	1.00	1.00	1.00	1.00	1.00	1.00	1.00	1.00	1.00	1.00	1.00
Upstream Filter(I)	1.00	1.00	1.00	1.00	1.00	1.00	1.00	1.00	1.00	1.00	1.00	1.00
Uniform Delay (d), s/veh	83.0	37.5	8.0	60.2	50.5	50.5	51.0	58.6	58.8	53.4	64.5	43.7
Incr Delay (d2), s/veh	114.3	0.7	0.5	0.9	101.0	114.1	212.2	8.3	9.3	0.7	2.9	136.5
Initial Q Delay(d3),s/veh	0.0	0.0	0.0	0.0	0.0	0.0	0.0	0.0	0.0	0.0	0.0	0.0
%ile BackOfQ(50%),veh/ln	10.9	12.2	3.9	7.9	57.9	65.3	18.8	16.5	15.6	4.6	8.8	30.1
LnGrp Delay(d),s/veh	197.3	38.3	8.6	61.1	151.5	164.6	263.2	66.9	68.1	54.0	67.4	180.2
LnGrp LOS	F	D	A	E	F	F	F	E	E	D	E	F
Approach Vol, veh/h		1822			3128			1589			1489	
Approach Delay, s/veh		57.9			145.7			181.5			141.5	
Approach LOS		E			F			F			F	

Timer	1	2	3	4	5	6	7	8
Assigned Phs	1	2	3	4	5	6	7	8
Phs Duration (G+Y+Rc), s	20.0	85.0	18.5	56.5	23.0	82.0	32.0	43.0
Change Period (Y+Rc), s	6.0	6.0	7.0	7.0	6.0	6.0	7.0	7.0
Max Green Setting (Gmax), s	14.0	79.0	13.0	48.0	17.0	76.0	25.0	36.0
Max Q Clear Time (g_c+I1), s	16.0	81.0	11.4	33.9	4.5	27.8	27.0	33.0
Green Ext Time (p_c), s	0.0	0.0	0.0	3.1	0.5	3.1	0.0	1.7

Intersection Summary	
HCM 2010 Ctrl Delay	132.1
HCM 2010 LOS	F

Intersection	
Int Delay, s/veh	17.4

Movement	EBL	EBT	WBT	WBR	SBL	SBR
Lane Configurations						
Traffic Vol, veh/h	0	1281	2823	26	0	149
Future Vol, veh/h	0	1281	2823	26	0	149
Conflicting Peds, #/hr	0	0	0	0	0	0
Sign Control	Free	Free	Free	Free	Stop	Stop
RT Channelized	-	None	-	None	-	None
Storage Length	-	-	-	-	-	0
Veh in Median Storage, #	-	0	0	-	0	-
Grade, %	-	0	0	-	0	-
Peak Hour Factor	92	92	92	92	92	92
Heavy Vehicles, %	2	2	2	2	2	2
Mvmt Flow	0	1392	3068	28	0	162

Major/Minor	Major1		Major2		Minor2	
Conflicting Flow All	-	0	-	0	-	1548
Stage 1	-	-	-	-	-	-
Stage 2	-	-	-	-	-	-
Critical Hdwy	-	-	-	-	-	7.14
Critical Hdwy Stg 1	-	-	-	-	-	-
Critical Hdwy Stg 2	-	-	-	-	-	-
Follow-up Hdwy	-	-	-	-	-	3.92
Pot Cap-1 Maneuver	0	-	-	-	0	~ 88
Stage 1	0	-	-	-	0	-
Stage 2	0	-	-	-	0	-
Platoon blocked, %		-	-	-		
Mov Cap-1 Maneuver	-	-	-	-	-	~ 88
Mov Cap-2 Maneuver	-	-	-	-	-	-
Stage 1	-	-	-	-	-	-
Stage 2	-	-	-	-	-	-

Approach	EB	WB	SB
HCM Control Delay, s	0	0	$ 498.9
HCM LOS			F

Minor Lane/Major Mvmt	EBT	WBT	WBR	SBLn1
Capacity (veh/h)	-	-	-	88
HCM Lane V/C Ratio	-	-	-	1.84
HCM Control Delay (s)	-	-	-	$ 498.9
HCM Lane LOS	-	-	-	F
HCM 95th %tile Q(veh)	-	-	-	13.7

Notes			
~: Volume exceeds capacity	$: Delay exceeds 300s	+: Computation Not Defined	*: All major volume in platoon

Intersection	
Int Delay, s/veh	50.5

Movement	EBT	EBR	WBL	WBT	NBL	NBR
Lane Configurations	↑↑↑			↑↑↑	↰	↱
Traffic Vol, veh/h	1281	0	0	2695	154	78
Future Vol, veh/h	1281	0	0	2695	154	78
Conflicting Peds, #/hr	0	0	0	0	0	0
Sign Control	Free	Free	Free	Free	Stop	Stop
RT Channelized	-	None	-	None	-	None
Storage Length	-	-	-	-	0	50
Veh in Median Storage, #	0	-	-	0	0	-
Grade, %	0	-	-	0	0	-
Peak Hour Factor	92	92	92	92	92	92
Heavy Vehicles, %	2	2	2	2	2	2
Mvmt Flow	1392	0	0	2929	167	85

Major/Minor	Major1		Major2		Minor1	
Conflicting Flow All	0	-	-	-	2564	696
Stage 1	-	-	-	-	1392	-
Stage 2	-	-	-	-	1172	-
Critical Hdwy	-	-	-	-	5.74	7.14
Critical Hdwy Stg 1	-	-	-	-	6.64	-
Critical Hdwy Stg 2	-	-	-	-	6.04	-
Follow-up Hdwy	-	-	-	-	3.82	3.92
Pot Cap-1 Maneuver	-	0	0	-	~ 46	329
Stage 1	-	0	0	-	~ 138	-
Stage 2	-	0	0	-	231	-
Platoon blocked, %	-			-		
Mov Cap-1 Maneuver	-	-	-	-	~ 46	329
Mov Cap-2 Maneuver	-	-	-	-	~ 46	-
Stage 1	-	-	-	-	~ 138	-
Stage 2	-	-	-	-	231	-

Approach	EB	WB	NB
HCM Control Delay, s	0	0	$ 916.3
HCM LOS			F

Minor Lane/Major Mvmt	NBLn1	NBLn2	EBT	WBT
Capacity (veh/h)	46	329	-	-
HCM Lane V/C Ratio	3.639	0.258	-	-
HCM Control Delay (s)	$ 1370.4	19.7	-	-
HCM Lane LOS	F	C	-	-
HCM 95th %tile Q(veh)	18.6	1	-	-

Notes			
~: Volume exceeds capacity	$: Delay exceeds 300s	+: Computation Not Defined	*: All major volume in platoon

Intersection	
Int Delay, s/veh	0.2

Movement	EBL	EBT	WBT	WBR	SBL	SBR
Lane Configurations						
Traffic Vol, veh/h	0	1359	2678	2	0	15
Future Vol, veh/h	0	1359	2678	2	0	15
Conflicting Peds, #/hr	0	0	0	0	0	0
Sign Control	Free	Free	Free	Free	Stop	Stop
RT Channelized	-	None	-	None	-	None
Storage Length	-	-	-	-	-	0
Veh in Median Storage, #	-	0	0	-	0	-
Grade, %	-	0	0	-	0	-
Peak Hour Factor	92	92	92	92	92	92
Heavy Vehicles, %	2	2	2	2	2	2
Mvmt Flow	0	1477	2911	2	0	16

Major/Minor	Major1		Major2		Minor2	
Conflicting Flow All	-	0	-	0	-	1457
Stage 1	-	-	-	-	-	-
Stage 2	-	-	-	-	-	-
Critical Hdwy	-	-	-	-	-	7.14
Critical Hdwy Stg 1	-	-	-	-	-	-
Critical Hdwy Stg 2	-	-	-	-	-	-
Follow-up Hdwy	-	-	-	-	-	3.92
Pot Cap-1 Maneuver	0	-	-	-	0	102
Stage 1	0	-	-	-	0	-
Stage 2	0	-	-	-	0	-
Platoon blocked, %		-	-	-		
Mov Cap-1 Maneuver	-	-	-	-	-	102
Mov Cap-2 Maneuver	-	-	-	-	-	-
Stage 1	-	-	-	-	-	-
Stage 2	-	-	-	-	-	-

Approach	EB	WB	SB
HCM Control Delay, s	0	0	46.9
HCM LOS			E

Minor Lane/Major Mvmt	EBT	WBT	WBR	SBLn1
Capacity (veh/h)	-	-	-	102
HCM Lane V/C Ratio	-	-	-	0.16
HCM Control Delay (s)	-	-	-	46.9
HCM Lane LOS	-	-	-	E
HCM 95th %tile Q(veh)	-	-	-	0.5

Movement	EBL	EBT	EBR	WBL	WBT	WBR	NBL	NBT	NBR	SBL	SBT	SBR
Lane Configurations												
Traffic Volume (veh/h)	119	1085	155	265	2110	164	368	98	214	168	216	202
Future Volume (veh/h)	119	1085	155	265	2110	164	368	98	214	168	216	202
Number	1	6	16	5	2	12	7	4	14	3	8	18
Initial Q (Qb), veh	0	0	0	0	0	0	0	0	0	0	0	0
Ped-Bike Adj(A_pbT)	1.00		1.00	1.00		1.00	1.00		1.00	1.00		1.00
Parking Bus, Adj	1.00	1.00	1.00	1.00	1.00	1.00	1.00	1.00	1.00	1.00	1.00	1.00
Adj Sat Flow, veh/h/ln	1863	1863	1900	1863	1863	1900	1863	1863	1863	1863	1863	1863
Adj Flow Rate, veh/h	134	1219	174	294	2344	182	460	122	268	202	260	243
Adj No. of Lanes	1	3	0	1	3	0	1	1	1	1	1	1
Peak Hour Factor	0.89	0.89	0.89	0.90	0.90	0.90	0.80	0.80	0.80	0.83	0.83	0.83
Percent Heavy Veh, %	2	2	2	2	2	2	2	2	2	2	2	2
Cap, veh/h	143	1589	227	373	2288	175	429	519	441	365	308	262
Arrive On Green	0.05	0.35	0.35	0.32	0.95	0.95	0.20	0.28	0.28	0.09	0.17	0.17
Sat Flow, veh/h	1774	4498	642	1774	4819	369	1774	1863	1583	1774	1863	1583
Grp Volume(v), veh/h	134	919	474	294	1640	886	460	122	268	202	260	243
Grp Sat Flow(s),veh/h/ln	1774	1695	1749	1774	1695	1798	1774	1863	1583	1774	1863	1583
Q Serve(g_s), s	8.0	36.1	36.1	14.2	71.2	71.2	30.0	7.6	15.1	13.0	20.3	22.7
Cycle Q Clear(g_c), s	8.0	36.1	36.1	14.2	71.2	71.2	30.0	7.6	15.1	13.0	20.3	22.7
Prop In Lane	1.00		0.37	1.00		0.21	1.00		1.00	1.00		1.00
Lane Grp Cap(c), veh/h	143	1198	618	373	1610	854	429	519	441	365	308	262
V/C Ratio(X)	0.94	0.77	0.77	0.79	1.02	1.04	1.07	0.24	0.61	0.55	0.85	0.93
Avail Cap(c_a), veh/h	143	1198	618	394	1610	854	429	522	443	365	310	264
HCM Platoon Ratio	1.00	1.00	1.00	2.00	2.00	2.00	1.00	1.00	1.00	1.00	1.00	1.00
Upstream Filter(I)	1.00	1.00	1.00	0.09	0.09	0.09	1.00	1.00	1.00	1.00	1.00	1.00
Uniform Delay (d), s/veh	41.1	43.0	43.0	44.3	3.8	3.8	41.1	41.8	22.0	47.4	60.8	61.7
Incr Delay (d2), s/veh	56.6	4.7	8.8	0.9	12.2	21.3	63.8	0.2	2.1	1.1	18.4	36.5
Initial Q Delay(d3),s/veh	0.0	0.0	0.0	0.0	0.0	0.0	0.0	0.0	0.0	0.0	0.0	0.0
%ile BackOfQ(50%),veh/ln	6.1	17.6	18.9	10.5	27.8	31.6	25.4	3.9	8.2	7.1	12.0	12.6
LnGrp Delay(d),s/veh	97.7	47.8	51.9	45.2	16.0	25.1	104.9	41.9	24.1	48.5	79.1	98.2
LnGrp LOS	F	D	D	D	F	F	F	D	C	D	E	F
Approach Vol, veh/h		1527			2820			850			705	
Approach Delay, s/veh		53.4			21.9			70.4			76.9	
Approach LOS		D			C			E			E	

Timer	1	2	3	4	5	6	7	8
Assigned Phs	1	2	3	4	5	6	7	8
Phs Duration (G+Y+Rc), s	11.0	76.2	16.0	46.8	29.2	58.0	33.0	29.8
Change Period (Y+Rc), s	3.0	5.0	3.0	5.0	5.0	* 5	3.0	5.0
Max Green Setting (Gmax), s	8.0	71.0	13.0	42.0	26.0	* 53	30.0	25.0
Max Q Clear Time (g_c+I1), s	10.0	73.2	15.0	17.1	16.2	38.1	32.0	24.7
Green Ext Time (p_c), s	0.0	0.0	0.0	1.2	0.3	3.2	0.0	0.1

Intersection Summary	
HCM 2010 Ctrl Delay	43.6
HCM 2010 LOS	D

Notes

* HCM 2010 computational engine requires equal clearance times for the phases crossing the barrier.

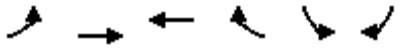

Movement	EBL	EBT	WBT	WBR	SBL	SBR
Lane Configurations						
Traffic Volume (veh/h)	139	1312	2309	564	558	270
Future Volume (veh/h)	139	1312	2309	564	558	270
Number	1	6	2	12	3	18
Initial Q (Qb), veh	0	0	0	0	0	0
Ped-Bike Adj(A_pbT)	1.00			1.00	1.00	1.00
Parking Bus, Adj	1.00	1.00	1.00	1.00	1.00	1.00
Adj Sat Flow, veh/h/ln	1863	1863	1863	1900	1863	1863
Adj Flow Rate, veh/h	160	1508	2594	634	581	281
Adj No. of Lanes	1	3	3	0	1	1
Peak Hour Factor	0.87	0.87	0.89	0.89	0.96	0.96
Percent Heavy Veh, %	2	2	2	2	2	2
Cap, veh/h	456	4222	2350	533	520	829
Arrive On Green	0.46	1.00	0.57	0.57	0.29	0.29
Sat Flow, veh/h	1774	5253	4315	940	1774	1583
Grp Volume(v), veh/h	160	1508	2083	1145	581	281
Grp Sat Flow(s),veh/h/ln	1774	1695	1695	1697	1774	1583
Q Serve(g_s), s	4.0	0.0	85.0	85.0	44.0	0.0
Cycle Q Clear(g_c), s	4.0	0.0	85.0	85.0	44.0	0.0
Prop In Lane	1.00			0.55	1.00	1.00
Lane Grp Cap(c), veh/h	456	4222	1921	962	520	829
V/C Ratio(X)	0.35	0.36	1.08	1.19	1.12	0.34
Avail Cap(c_a), veh/h	456	4222	1921	962	520	829
HCM Platoon Ratio	2.00	2.00	1.00	1.00	1.00	1.00
Upstream Filter(I)	0.65	0.65	1.00	1.00	1.00	1.00
Uniform Delay (d), s/veh	31.6	0.0	32.5	32.5	53.0	20.7
Incr Delay (d2), s/veh	0.2	0.2	47.6	96.1	75.4	0.2
Initial Q Delay(d3),s/veh	0.0	0.0	0.0	0.0	0.0	0.0
%ile BackOfQ(50%),veh/ln	3.9	0.1	52.2	65.2	32.4	6.8
LnGrp Delay(d),s/veh	31.9	0.2	80.1	128.6	128.4	20.9
LnGrp LOS	C	A	F	F	F	C
Approach Vol, veh/h		1668	3228		862	
Approach Delay, s/veh		3.2	97.3		93.4	
Approach LOS		A	F		F	

Timer	1	2	3	4	5	6	7	8
Assigned Phs	1	2				6		8
Phs Duration (G+Y+Rc), s	39.5	90.0				129.5		49.0
Change Period (Y+Rc), s	5.0	* 5				5.0		5.0
Max Green Setting (Gmax), s	8.6	* 85				96.0		44.0
Max Q Clear Time (g_c+I1), s	10.0	87.0				2.0		46.0
Green Ext Time (p_c), s	0.1	0.0				4.5		0.0

Intersection Summary	
HCM 2010 Ctrl Delay	69.5
HCM 2010 LOS	E

Notes

* HCM 2010 computational engine requires equal clearance times for the phases crossing the barrier.

Intersection	
Int Delay, s/veh	13.5

Movement	EBL	EBT	EBR	WBL	WBT	WBR	NBL	NBT	NBR	SBL	SBT	SBR
Lane Configurations												
Traffic Vol, veh/h	0	1870	0	0	2721	7	0	0	0	0	0	152
Future Vol, veh/h	0	1870	0	0	2721	7	0	0	0	0	0	152
Conflicting Peds, #/hr	0	0	0	0	0	0	0	0	0	0	0	0
Sign Control	Free	Free	Free	Free	Free	Free	Stop	Stop	Stop	Stop	Stop	Stop
RT Channelized	-	-	None	-	-	None	-	-	None	-	-	None
Storage Length	-	-	-	75	-	-	-	-	-	-	-	0
Veh in Median Storage, #	-	0	-	-	0	-	-	-	-	-	0	-
Grade, %	-	0	-	-	0	-	-	0	-	-	0	-
Peak Hour Factor	92	92	92	92	92	92	92	92	92	92	92	92
Heavy Vehicles, %	2	2	2	2	2	2	2	2	2	2	2	2
Mvmt Flow	0	2033	0	0	2958	8	0	0	0	0	0	165

Major/Minor	Major1			Major2			Minor2		
Conflicting Flow All	-	0	-	2033	0	0	-	-	1483
Stage 1	-	-	-	-	-	-	-	-	-
Stage 2	-	-	-	-	-	-	-	-	-
Critical Hdwy	-	-	-	5.34	-	-	-	-	7.14
Critical Hdwy Stg 1	-	-	-	-	-	-	-	-	-
Critical Hdwy Stg 2	-	-	-	-	-	-	-	-	-
Follow-up Hdwy	-	-	-	3.12	-	-	-	-	3.92
Pot Cap-1 Maneuver	0	-	0	120	-	-	0	0	~ 98
Stage 1	0	-	0	-	-	-	0	0	-
Stage 2	0	-	0	-	-	-	0	0	-
Platoon blocked, %		-			-	-			
Mov Cap-1 Maneuver	-	-	-	120	-	-	-	0	~ 98
Mov Cap-2 Maneuver	-	-	-	-	-	-	-	0	-
Stage 1	-	-	-	-	-	-	-	0	-
Stage 2	-	-	-	-	-	-	-	0	-

Approach	EB	WB	SB
HCM Control Delay, s	0	0	$ 423.4
HCM LOS			F

Minor Lane/Major Mvmt	EBT	WBL	WBT	WBR	SBLn1
Capacity (veh/h)	-	120	-	-	98
HCM Lane V/C Ratio	-	-	-	-	1.686
HCM Control Delay (s)	-	0	-	-	$ 423.4
HCM Lane LOS	-	A	-	-	F
HCM 95th %tile Q(veh)	-	0	-	-	13.1

Notes

~: Volume exceeds capacity $: Delay exceeds 300s +: Computation Not Defined *: All major volume in platoon

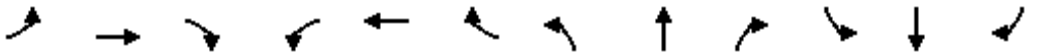

Movement	EBL	EBT	EBR	WBL	WBT	WBR	NBL	NBT	NBR	SBL	SBT	SBR
Lane Configurations												
Traffic Volume (vph)	172	1664	45	11	2330	28	171	6	28	60	28	229
Future Volume (vph)	172	1664	45	11	2330	28	171	6	28	60	28	229
Ideal Flow (vphpl)	1900	1900	1900	1900	1900	1900	1900	1900	1900	1900	1900	1900
Total Lost time (s)	6.0	6.0		6.0	6.0			7.0	7.0		7.0	7.0
Lane Util. Factor	1.00	0.91		1.00	0.91			1.00	1.00		1.00	1.00
Frt	1.00	1.00		1.00	1.00			1.00	0.85		1.00	0.85
Flt Protected	0.95	1.00		0.95	1.00			0.95	1.00		0.97	1.00
Satd. Flow (prot)	1770	5065		1770	5076			1777	1583		1801	1583
Flt Permitted	0.05	1.00		0.07	1.00			0.95	1.00		0.97	1.00
Satd. Flow (perm)	90	5065		131	5076			1777	1583		1801	1583
Peak-hour factor, PHF	0.88	0.88	0.88	0.95	0.95	0.95	0.77	0.77	0.77	0.55	0.55	0.55
Adj. Flow (vph)	195	1891	51	12	2453	29	222	8	36	109	51	416
RTOR Reduction (vph)	0	1	0	0	1	0	0	0	31	0	0	142
Lane Group Flow (vph)	195	1941	0	12	2481	0	0	230	5	0	160	274
Turn Type	pm+pt	NA		pm+pt	NA		Split	NA	Perm	Split	NA	Perm
Protected Phases	1	6		5	2		4	4		3	3	
Permitted Phases	6			2					4			3
Actuated Green, G (s)	99.0	99.0		85.0	85.0			23.0	23.0		30.0	30.0
Effective Green, g (s)	99.0	99.0		85.0	85.0			23.0	23.0		30.0	30.0
Actuated g/C Ratio	0.55	0.55		0.47	0.47			0.13	0.13		0.17	0.17
Clearance Time (s)	6.0	6.0		6.0	6.0			7.0	7.0		7.0	7.0
Vehicle Extension (s)	3.0	1.0		3.0	1.0			2.5	2.5		2.5	2.5
Lane Grp Cap (vph)	198	2785		80	2397			227	202		300	263
v/s Ratio Prot	c0.09	0.38		0.00	c0.49			c0.13			0.09	
v/s Ratio Perm	0.45			0.07					0.00			c0.17
v/c Ratio	0.98	0.70		0.15	1.04			1.01	0.02		0.53	1.04
Uniform Delay, d1	62.5	29.6		42.7	47.5			78.5	68.7		68.6	75.0
Progression Factor	1.00	1.00		1.00	1.00			1.00	1.00		1.00	1.00
Incremental Delay, d2	59.1	1.5		0.9	28.2			63.2	0.0		1.4	67.2
Delay (s)	121.7	31.0		43.5	75.7			141.7	68.7		70.0	142.2
Level of Service	F	C		D	E			F	E		E	F
Approach Delay (s)		39.3			75.6			131.8			122.1	
Approach LOS		D			E			F			F	

Intersection Summary			
HCM 2000 Control Delay	69.0	HCM 2000 Level of Service	E
HCM 2000 Volume to Capacity ratio	1.03		
Actuated Cycle Length (s)	180.0	Sum of lost time (s)	26.0
Intersection Capacity Utilization	87.5%	ICU Level of Service	E
Analysis Period (min)	15		

c Critical Lane Group

Movement	EBT	EBR	WBL	WBT	NBL	NBR
Lane Configurations						
Traffic Volume (veh/h)	1563	178	383	2104	265	215
Future Volume (veh/h)	1563	178	383	2104	265	215
Number	6	16	5	2	7	14
Initial Q (Qb), veh	0	0	0	0	0	0
Ped-Bike Adj(A_pbT)		1.00	1.00		1.00	1.00
Parking Bus, Adj	1.00	1.00	1.00	1.00	1.00	1.00
Adj Sat Flow, veh/h/ln	1863	1900	1863	1863	1863	1863
Adj Flow Rate, veh/h	1839	209	395	2169	301	244
Adj No. of Lanes	3	0	1	3	1	1
Peak Hour Factor	0.85	0.85	0.97	0.97	0.88	0.88
Percent Heavy Veh, %	2	2	2	2	2	2
Cap, veh/h	2133	241	519	3807	328	697
Arrive On Green	0.46	0.46	0.51	1.00	0.18	0.18
Sat Flow, veh/h	4804	524	1774	5253	1774	1583
Grp Volume(v), veh/h	1342	706	395	2169	301	244
Grp Sat Flow(s),veh/h/ln	1695	1770	1774	1695	1774	1583
Q Serve(g_s), s	53.1	53.8	19.4	0.0	25.0	0.0
Cycle Q Clear(g_c), s	53.1	53.8	19.4	0.0	25.0	0.0
Prop In Lane		0.30	1.00		1.00	1.00
Lane Grp Cap(c), veh/h	1559	814	519	3807	328	697
V/C Ratio(X)	0.86	0.87	0.76	0.57	0.92	0.35
Avail Cap(c_a), veh/h	1559	814	519	3807	378	742
HCM Platoon Ratio	1.00	1.00	2.00	2.00	1.00	1.00
Upstream Filter(I)	0.70	0.70	0.61	0.61	1.00	1.00
Uniform Delay (d), s/veh	36.2	36.4	30.2	0.0	60.0	27.8
Incr Delay (d2), s/veh	4.6	8.8	3.6	0.4	24.4	0.2
Initial Q Delay(d3),s/veh	0.0	0.0	0.0	0.0	0.0	0.0
%ile BackOfQ(50%),veh/ln	25.8	28.3	12.6	0.1	14.5	10.1
LnGrp Delay(d),s/veh	40.8	45.2	33.8	0.4	84.5	28.0
LnGrp LOS	D	D	C	A	F	C
Approach Vol, veh/h	2048			2564	545	
Approach Delay, s/veh	42.3			5.5	59.2	
Approach LOS	D			A	E	

Timer	1	2	3	4	5	6	7	8
Assigned Phs		2		4	5	6		
Phs Duration (G+Y+Rc), s		117.3		32.7	43.3	74.0		
Change Period (Y+Rc), s		5.0		5.0	5.0	* 5		
Max Green Setting (Gmax), s		108.0		32.0	36.0	* 69		
Max Q Clear Time (g_c+I1), s		2.0		27.0	21.4	55.8		
Green Ext Time (p_c), s		8.4		0.7	0.5	5.0		

Intersection Summary	
HCM 2010 Ctrl Delay	25.8
HCM 2010 LOS	C

Notes

* HCM 2010 computational engine requires equal clearance times for the phases crossing the barrier.

Movement	EBL	EBT	EBR	WBL	WBT	WBR	NBL	NBT	NBR	SBL	SBT	SBR
Lane Configurations												
Traffic Volume (veh/h)	40	1613	165	480	2017	18	401	10	166	20	37	69
Future Volume (veh/h)	40	1613	165	480	2017	18	401	10	166	20	37	69
Number	1	6	16	5	2	12	7	4	14	3	8	18
Initial Q (Qb), veh	0	0	0	0	0	0	0	0	0	0	0	0
Ped-Bike Adj(A_pbT)	1.00		1.00	1.00		1.00	1.00		1.00	1.00		1.00
Parking Bus, Adj	1.00	1.00	1.00	1.00	1.00	1.00	1.00	1.00	1.00	1.00	1.00	1.00
Adj Sat Flow, veh/h/ln	1863	1863	1900	1863	1863	1900	1863	1863	1900	1900	1863	1900
Adj Flow Rate, veh/h	50	2016	206	495	2079	19	501	12	208	28	51	96
Adj No. of Lanes	1	3	0	2	3	0	2	1	0	0	1	0
Peak Hour Factor	0.80	0.80	0.80	0.97	0.97	0.97	0.80	0.80	0.80	0.72	0.72	0.72
Percent Heavy Veh, %	2	2	2	2	2	2	2	2	2	2	2	2
Cap, veh/h	162	2535	257	551	3071	28	565	24	423	69	127	205
Arrive On Green	0.06	1.00	1.00	0.08	0.59	0.59	0.28	0.28	0.28	0.28	0.28	0.28
Sat Flow, veh/h	1774	4694	475	3442	5197	47	2397	87	1509	147	454	731
Grp Volume(v), veh/h	50	1451	771	495	1356	742	501	0	220	175	0	0
Grp Sat Flow(s),veh/h/ln	1774	1695	1779	1721	1695	1854	1199	0	1596	1332	0	0
Q Serve(g_s), s	1.9	0.0	0.0	9.2	40.9	41.0	21.5	0.0	17.3	3.3	0.0	0.0
Cycle Q Clear(g_c), s	1.9	0.0	0.0	9.2	40.9	41.0	42.0	0.0	17.3	20.5	0.0	0.0
Prop In Lane	1.00		0.27	1.00		0.03	1.00		0.95	0.16		0.55
Lane Grp Cap(c), veh/h	162	1831	961	551	2003	1096	565	0	447	401	0	0
V/C Ratio(X)	0.31	0.79	0.80	0.90	0.68	0.68	0.89	0.00	0.49	0.44	0.00	0.00
Avail Cap(c_a), veh/h	181	1831	961	758	2003	1096	565	0	447	401	0	0
HCM Platoon Ratio	2.00	2.00	2.00	1.00	1.00	1.00	1.00	1.00	1.00	1.00	1.00	1.00
Upstream Filter(I)	0.51	0.51	0.51	1.00	1.00	1.00	1.00	0.00	1.00	1.00	0.00	0.00
Uniform Delay (d), s/veh	18.7	0.0	0.0	20.0	20.9	20.9	59.7	0.0	45.1	44.5	0.0	0.0
Incr Delay (d2), s/veh	0.2	1.9	3.7	8.7	1.9	3.4	15.6	0.0	0.6	0.6	0.0	0.0
Initial Q Delay(d3),s/veh	0.0	0.0	0.0	0.0	0.0	0.0	0.0	0.0	0.0	0.0	0.0	0.0
%ile BackOfQ(50%),veh/ln	0.9	0.5	1.0	6.4	19.5	21.8	11.6	0.0	7.7	6.3	0.0	0.0
LnGrp Delay(d),s/veh	18.9	1.9	3.7	28.7	22.8	24.3	75.3	0.0	45.7	45.1	0.0	0.0
LnGrp LOS	B	A	A	C	C	C	E		D	D		
Approach Vol, veh/h		2272			2593			721			175	
Approach Delay, s/veh		2.9			24.3			66.3			45.1	
Approach LOS		A			C			E			D	

Timer	1	2	3	4	5	6	7	8
Assigned Phs	1	2		4	5	6		8
Phs Duration (G+Y+Rc), s	7.4	94.6		48.0	15.0	87.0		48.0
Change Period (Y+Rc), s	3.0	6.0		6.0	3.0	6.0		6.0
Max Green Setting (Gmax), s	6.0	87.0		42.0	21.0	72.0		42.0
Max Q Clear Time (g_c+I1), s	3.9	43.0		44.0	11.2	2.0		22.5
Green Ext Time (p_c), s	0.0	6.3		0.0	0.7	7.3		0.8

Intersection Summary		
HCM 2010 Ctrl Delay	21.8	
HCM 2010 LOS	C	

Movement	EBL	EBT	EBR	WBL	WBT	WBR	NBL	NBT	NBR	SBL	SBT	SBR
Lane Configurations												
Traffic Volume (veh/h)	4	1679	116	199	2210	13	304	5	440	6	1	1
Future Volume (veh/h)	4	1679	116	199	2210	13	304	5	440	6	1	1
Number	1	6	16	5	2	12	7	4	14	3	8	18
Initial Q (Qb), veh	0	0	0	0	0	0	0	0	0	0	0	0
Ped-Bike Adj(A_pbT)	1.00		1.00	1.00		1.00	1.00		1.00	1.00		1.00
Parking Bus, Adj	1.00	1.00	1.00	1.00	1.00	1.00	1.00	1.00	1.00	1.00	1.00	1.00
Adj Sat Flow, veh/h/ln	1863	1863	1900	1863	1863	1900	1863	1863	1863	1900	1863	1900
Adj Flow Rate, veh/h	4	1866	129	201	2232	13	338	6	489	11	2	2
Adj No. of Lanes	1	3	0	1	3	0	1	1	1	0	1	0
Peak Hour Factor	0.90	0.90	0.90	0.99	0.99	0.99	0.90	0.90	0.90	0.55	0.55	0.55
Percent Heavy Veh, %	2	2	2	2	2	2	2	2	2	2	2	2
Cap, veh/h	124	2206	152	342	3226	19	494	588	500	276	50	44
Arrive On Green	0.91	0.91	0.91	0.26	1.00	1.00	0.32	0.32	0.32	0.32	0.32	0.32
Sat Flow, veh/h	168	4859	335	1774	5217	30	1407	1863	1583	743	159	139
Grp Volume(v), veh/h	4	1300	695	201	1450	795	338	6	489	15	0	0
Grp Sat Flow(s),veh/h/ln	168	1695	1804	1774	1695	1857	1407	1863	1583	1041	0	0
Q Serve(g_s), s	0.3	23.1	23.5	4.3	0.0	0.0	31.6	0.3	46.5	0.2	0.0	0.0
Cycle Q Clear(g_c), s	0.3	23.1	23.5	4.3	0.0	0.0	32.6	0.3	46.5	1.0	0.0	0.0
Prop In Lane	1.00		0.19	1.00		0.02	1.00		1.00	0.73		0.13
Lane Grp Cap(c), veh/h	124	1539	819	342	2097	1149	494	588	500	370	0	0
V/C Ratio(X)	0.03	0.84	0.85	0.59	0.69	0.69	0.68	0.01	0.98	0.04	0.00	0.00
Avail Cap(c_a), veh/h	124	1539	819	342	2097	1149	494	588	500	370	0	0
HCM Platoon Ratio	2.00	2.00	2.00	2.00	2.00	2.00	1.00	1.00	1.00	1.00	1.00	1.00
Upstream Filter(I)	1.00	1.00	1.00	1.00	1.00	1.00	1.00	1.00	1.00	1.00	0.00	0.00
Uniform Delay (d), s/veh	3.8	4.9	4.9	42.4	0.0	0.0	46.6	35.7	51.5	35.9	0.0	0.0
Incr Delay (d2), s/veh	0.5	5.9	10.7	7.2	1.9	3.4	7.5	0.0	35.2	0.2	0.0	0.0
Initial Q Delay(d3),s/veh	0.0	0.0	0.0	0.0	0.0	0.0	0.0	0.0	0.0	0.0	0.0	0.0
%ile BackOfQ(50%),veh/ln	0.0	10.6	12.8	7.4	0.6	1.1	13.8	0.2	25.3	0.5	0.0	0.0
LnGrp Delay(d),s/veh	4.3	10.8	15.6	49.6	1.9	3.4	54.1	35.7	86.6	36.1	0.0	0.0
LnGrp LOS	A	B	B	D	A	A	D	D	F	D		
Approach Vol, veh/h		1999			2446			833			15	
Approach Delay, s/veh		12.4			6.3			73.1			36.1	
Approach LOS		B			A			E			D	

Timer	1	2	3	4	5	6	7	8
Assigned Phs		2		4	5	6		8
Phs Duration (G+Y+Rc), s		99.0		53.0	25.0	74.0		53.0
Change Period (Y+Rc), s		5.0		5.0	5.0	* 5		5.0
Max Green Setting (Gmax), s		92.0		48.0	20.0	* 69		48.0
Max Q Clear Time (g_c+I1), s		2.0		48.5	6.3	25.5		3.0
Green Ext Time (p_c), s		7.2		0.0	0.2	6.1		0.1

Intersection Summary		
HCM 2010 Ctrl Delay		19.2
HCM 2010 LOS		B

Notes

* HCM 2010 computational engine requires equal clearance times for the phases crossing the barrier.

Movement	EBL	EBT	EBR	WBL	WBT	WBR	NBL	NBT	NBR	SBL	SBT	SBR
Lane Configurations												
Traffic Volume (veh/h)	50	2075	0	24	2227	90	6	1	140	273	1	90
Future Volume (veh/h)	50	2075	0	24	2227	90	6	1	140	273	1	90
Number	1	6	16	5	2	12	7	4	14	3	8	18
Initial Q (Qb), veh	0	0	0	0	0	0	0	0	0	0	0	0
Ped-Bike Adj(A_pbT)	1.00		1.00	1.00		1.00	1.00		1.00	1.00		1.00
Parking Bus, Adj	1.00	1.00	1.00	1.00	1.00	1.00	1.00	1.00	1.00	1.00	1.00	1.00
Adj Sat Flow, veh/h/ln	1863	1863	1900	1863	1863	1900	1900	1863	1900	1863	1863	1900
Adj Flow Rate, veh/h	55	2280	0	25	2344	95	7	1	167	300	1	99
Adj No. of Lanes	1	3	0	1	3	0	0	1	0	1	1	0
Peak Hour Factor	0.91	0.91	0.91	0.95	0.95	0.95	0.84	0.84	0.84	0.91	0.91	0.91
Percent Heavy Veh, %	2	2	2	2	2	2	2	2	2	2	2	2
Cap, veh/h	119	2743	0	183	2640	106	33	16	517	410	5	537
Arrive On Green	0.07	1.00	0.00	0.03	0.53	0.53	0.34	0.34	0.34	0.34	0.34	0.34
Sat Flow, veh/h	1774	5253	0	1774	5015	202	25	48	1512	1212	16	1570
Grp Volume(v), veh/h	55	2280	0	25	1580	859	175	0	0	300	0	100
Grp Sat Flow(s),veh/h/ln	1774	1695	0	1774	1695	1827	1585	0	0	1212	0	1586
Q Serve(g_s), s	0.0	0.0	0.0	1.0	62.8	63.9	0.0	0.0	0.0	29.2	0.0	6.7
Cycle Q Clear(g_c), s	0.0	0.0	0.0	1.0	62.8	63.9	12.3	0.0	0.0	41.5	0.0	6.7
Prop In Lane	1.00		0.00	1.00		0.11	0.04		0.95	1.00		0.99
Lane Grp Cap(c), veh/h	119	2743	0	183	1784	962	567	0	0	410	0	542
V/C Ratio(X)	0.46	0.83	0.00	0.14	0.89	0.89	0.31	0.00	0.00	0.73	0.00	0.18
Avail Cap(c_a), veh/h	119	2743	0	183	1784	962	567	0	0	410	0	542
HCM Platoon Ratio	2.00	2.00	2.00	1.00	1.00	1.00	1.00	1.00	1.00	1.00	1.00	1.00
Upstream Filter(I)	1.00	1.00	0.00	1.00	1.00	1.00	1.00	0.00	0.00	1.00	0.00	1.00
Uniform Delay (d), s/veh	67.0	0.0	0.0	17.8	31.9	32.2	37.0	0.0	0.0	49.1	0.0	35.1
Incr Delay (d2), s/veh	12.5	3.1	0.0	1.6	6.9	12.4	1.4	0.0	0.0	11.0	0.0	0.7
Initial Q Delay(d3),s/veh	0.0	0.0	0.0	0.0	0.0	0.0	0.0	0.0	0.0	0.0	0.0	0.0
%ile BackOfQ(50%),veh/ln	2.6	0.8	0.0	0.6	30.9	35.3	5.7	0.0	0.0	13.0	0.0	3.1
LnGrp Delay(d),s/veh	79.5	3.1	0.0	19.3	38.8	44.6	38.4	0.0	0.0	60.1	0.0	35.9
LnGrp LOS	E	A		B	D	D	D			E		D
Approach Vol, veh/h		2335			2464			175			400	
Approach Delay, s/veh		4.9			40.6			38.4			54.0	
Approach LOS		A			D			D			D	

Timer	1	2	3	4	5	6	7	8
Assigned Phs	1	2		4	5	6		8
Phs Duration (G+Y+Rc), s	10.0	85.0		57.0	8.0	87.0		57.0
Change Period (Y+Rc), s	5.0	* 5		5.0	3.0	5.0		5.0
Max Green Setting (Gmax), s	5.0	* 80		52.0	5.0	80.0		52.0
Max Q Clear Time (g_c+I1), s	2.0	65.9		14.3	3.0	2.0		43.5
Green Ext Time (p_c), s	0.0	6.4		1.0	0.0	9.3		0.9

Intersection Summary	
HCM 2010 Ctrl Delay	26.0
HCM 2010 LOS	C

Notes

* HCM 2010 computational engine requires equal clearance times for the phases crossing the barrier.

Movement	EBL	EBT	EBR	WBL	WBT	WBR	NBL	NBT	NBR	SBL	SBT	SBR
Lane Configurations												
Traffic Volume (veh/h)	721	1536	325	418	1269	388	314	876	474	493	945	675
Future Volume (veh/h)	721	1536	325	418	1269	388	314	876	474	493	945	675
Number	3	8	18	7	4	14	1	6	16	5	2	12
Initial Q (Qb), veh	0	0	0	0	0	0	0	0	0	0	0	0
Ped-Bike Adj(A_pbT)	1.00		1.00	1.00		1.00	1.00		1.00	1.00		1.00
Parking Bus, Adj	1.00	1.00	1.00	1.00	1.00	1.00	1.00	1.00	1.00	1.00	1.00	1.00
Adj Sat Flow, veh/h/ln	1863	1863	1900	1863	1863	1900	1863	1863	1900	1863	1863	1863
Adj Flow Rate, veh/h	810	1726	365	445	1350	413	341	952	515	542	1038	742
Adj No. of Lanes	2	3	0	2	3	0	2	3	0	2	3	1
Peak Hour Factor	0.89	0.89	0.89	0.94	0.94	0.94	0.92	0.92	0.92	0.91	0.91	0.91
Percent Heavy Veh, %	2	2	2	2	2	2	2	2	2	2	2	2
Cap, veh/h	650	1640	342	363	1139	347	325	2204	1029	421	3447	1372
Arrive On Green	0.19	0.39	0.39	0.11	0.29	0.29	0.09	0.65	0.65	0.12	0.68	0.68
Sat Flow, veh/h	3442	4217	881	3442	3867	1178	3442	3390	1583	3442	5085	1583
Grp Volume(v), veh/h	810	1383	708	445	1183	580	341	952	515	542	1038	742
Grp Sat Flow(s),veh/h/ln	1721	1695	1707	1721	1695	1655	1721	1695	1583	1721	1695	1583
Q Serve(g_s), s	34.0	70.0	70.0	19.0	53.0	53.0	17.0	24.6	30.4	22.0	14.9	36.6
Cycle Q Clear(g_c), s	34.0	70.0	70.0	19.0	53.0	53.0	17.0	24.6	30.4	22.0	14.9	36.6
Prop In Lane	1.00		0.52	1.00		0.71	1.00		1.00	1.00		1.00
Lane Grp Cap(c), veh/h	650	1318	664	363	998	487	325	2204	1029	421	3447	1372
V/C Ratio(X)	1.25	1.05	1.07	1.22	1.18	1.19	1.05	0.43	0.50	1.29	0.30	0.54
Avail Cap(c_a), veh/h	650	1318	664	363	998	487	325	2204	1029	421	3447	1372
HCM Platoon Ratio	1.00	1.00	1.00	1.00	1.00	1.00	1.00	1.00	1.00	1.00	1.00	1.00
Upstream Filter(I)	1.00	1.00	1.00	1.00	1.00	1.00	1.00	1.00	1.00	1.00	1.00	1.00
Uniform Delay (d), s/veh	73.0	55.0	55.0	80.5	63.5	63.5	81.5	15.3	16.3	79.0	11.7	25.0
Incr Delay (d2), s/veh	123.3	38.8	53.8	123.4	93.5	104.7	63.4	0.6	1.7	146.7	0.2	1.5
Initial Q Delay(d3),s/veh	0.0	0.0	0.0	0.0	0.0	0.0	0.0	0.0	0.0	0.0	0.0	0.0
%ile BackOfQ(50%),veh/ln	27.3	39.9	42.9	15.3	37.8	38.4	10.9	11.7	13.7	19.0	7.0	16.3
LnGrp Delay(d),s/veh	196.3	93.8	108.8	203.9	157.0	168.2	144.9	15.9	18.1	225.7	12.0	26.5
LnGrp LOS	F	F	F	F	F	F	F	B	B	F	B	C
Approach Vol, veh/h		2901			2208			1808			2322	
Approach Delay, s/veh		126.1			169.4			40.9			66.5	
Approach LOS		F			F			D			E	

Timer	1	2	3	4	5	6	7	8
Assigned Phs	1	2	3	4	5	6	7	8
Phs Duration (G+Y+Rc), s	21.0	130.0	40.0	59.0	26.0	125.0	23.0	76.0
Change Period (Y+Rc), s	4.0	6.0	6.0	* 6	4.0	6.0	4.0	6.0
Max Green Setting (Gmax), s	17.0	56.0	34.0	* 53	22.0	51.0	19.0	68.0
Max Q Clear Time (g_c+I1), s	19.0	38.6	36.0	55.0	24.0	32.4	21.0	72.0
Green Ext Time (p_c), s	0.0	3.0	0.0	0.0	0.0	3.7	0.0	0.0

Intersection Summary	
HCM 2010 Ctrl Delay	104.8
HCM 2010 LOS	F

Notes

* HCM 2010 computational engine requires equal clearance times for the phases crossing the barrier.

Movement	EBL	EBT	EBR	WBL	WBT	WBR	NBL	NBT	NBR	SBL	SBT	SBR
Lane Configurations												
Traffic Volume (veh/h)	126	2267	38	0	1427	254	186	51	6	327	112	430
Future Volume (veh/h)	126	2267	38	0	1427	254	186	51	6	327	112	430
Number	1	6	16	5	2	12	7	4	14	3	8	18
Initial Q (Qb), veh	0	0	0	0	0	0	0	0	0	0	0	0
Ped-Bike Adj(A_pbT)	1.00		1.00	1.00		1.00	1.00		1.00	1.00		1.00
Parking Bus, Adj	1.00	1.00	1.00	1.00	1.00	1.00	1.00	1.00	1.00	1.00	1.00	1.00
Adj Sat Flow, veh/h/ln	1863	1863	1900	0	1863	1900	1863	1863	1863	1863	1863	1863
Adj Flow Rate, veh/h	140	2519	42	0	1551	276	232	64	8	355	122	467
Adj No. of Lanes	1	3	0	0	3	0	1	1	1	1	1	1
Peak Hour Factor	0.90	0.90	0.90	0.92	0.92	0.92	0.80	0.80	0.80	0.92	0.92	0.92
Percent Heavy Veh, %	2	2	2	0	2	2	2	2	2	2	2	2
Cap, veh/h	205	3382	56	0	2520	447	291	197	167	372	217	253
Arrive On Green	0.04	0.66	0.66	0.00	0.58	0.58	0.12	0.11	0.11	0.13	0.12	0.12
Sat Flow, veh/h	1774	5152	86	0	4514	771	1774	1863	1583	1774	1863	1583
Grp Volume(v), veh/h	140	1655	906	0	1209	618	232	64	8	355	122	467
Grp Sat Flow(s),veh/h/ln	1774	1695	1848	0	1695	1727	1774	1863	1583	1774	1863	1583
Q Serve(g_s), s	5.6	59.0	59.5	0.0	41.9	42.2	14.9	5.7	0.8	21.6	11.1	21.0
Cycle Q Clear(g_c), s	5.6	59.0	59.5	0.0	41.9	42.2	14.9	5.7	0.8	21.6	11.1	21.0
Prop In Lane	1.00		0.05	0.00		0.45	1.00		1.00	1.00		1.00
Lane Grp Cap(c), veh/h	205	2226	1213	0	1966	1001	291	197	167	372	217	253
V/C Ratio(X)	0.68	0.74	0.75	0.00	0.61	0.62	0.80	0.33	0.05	0.95	0.56	1.84
Avail Cap(c_a), veh/h	482	2226	1213	0	1966	1001	322	197	167	404	217	253
HCM Platoon Ratio	1.00	1.00	1.00	1.00	1.00	1.00	1.00	1.00	1.00	1.00	1.00	1.00
Upstream Filter(I)	1.00	1.00	1.00	0.00	1.00	1.00	1.00	1.00	1.00	1.00	1.00	1.00
Uniform Delay (d), s/veh	25.2	20.8	20.8	0.0	24.7	24.8	73.0	74.6	72.4	71.1	75.1	42.9
Incr Delay (d2), s/veh	1.5	2.3	4.2	0.0	1.5	2.9	10.5	4.4	0.5	31.0	10.1	394.3
Initial Q Delay(d3),s/veh	0.0	0.0	0.0	0.0	0.0	0.0	0.0	0.0	0.0	0.0	0.0	0.0
%ile BackOfQ(50%),veh/ln	3.9	28.1	31.6	0.0	20.0	20.9	12.0	3.2	0.4	20.7	6.4	36.9
LnGrp Delay(d),s/veh	26.7	23.1	25.1	0.0	26.1	27.6	83.5	78.9	72.9	102.1	85.2	437.2
LnGrp LOS	C	C	C		C	C	F	E	E	F	F	F
Approach Vol, veh/h		2701			1827			304			944	
Approach Delay, s/veh		23.9			26.6			82.3			265.7	
Approach LOS		C			C			F			F	

Timer	1	2	3	4	5	6	7	8
Assigned Phs	1	2	3	4		6	7	8
Phs Duration (G+Y+Rc), s	13.8	110.4	29.8	26.0		124.2	27.8	28.0
Change Period (Y+Rc), s	6.0	6.0	6.0	7.0		6.0	6.0	7.0
Max Green Setting (Gmax), s	36.0	73.0	27.0	19.0		115.0	25.0	21.0
Max Q Clear Time (g_c+I1), s	7.6	44.2	23.6	7.7		61.5	16.9	23.0
Green Ext Time (p_c), s	0.2	5.2	0.2	0.1		9.5	0.2	0.0

Intersection Summary	
HCM 2010 Ctrl Delay	67.4
HCM 2010 LOS	E

Intersection	
Int Delay, s/veh	79.2

Movement	EBL	EBT	EBR	WBL	WBT	WBR	NBL	NBT	NBR	SBL	SBT	SBR
Lane Configurations												
Traffic Vol, veh/h	26	2072	502	180	1641	23	0	0	188	0	0	40
Future Vol, veh/h	26	2072	502	180	1641	23	0	0	188	0	0	40
Conflicting Peds, #/hr	0	0	0	0	0	0	0	0	0	0	0	0
Sign Control	Free	Free	Free	Free	Free	Free	Stop	Stop	Stop	Stop	Stop	Stop
RT Channelized	-	-	None	-	-	None	-	-	None	-	-	None
Storage Length	-	-	-	300	-	-	-	-	0	-	-	0
Veh in Median Storage, #	-	0	-	-	0	-	-	0	-	-	0	-
Grade, %	-	0	-	-	0	-	-	0	-	-	0	-
Peak Hour Factor	92	92	92	92	92	92	92	92	92	92	92	92
Heavy Vehicles, %	2	2	2	2	2	2	2	2	2	2	2	2
Mvmt Flow	28	2252	546	196	1784	25	0	0	204	0	0	43

Major/Minor	Major1			Major2			Minor1			Minor2		
Conflicting Flow All	1809	0	0	2798	0	0	-	-	1399	-	-	905
Stage 1	-	-	-	-	-	-	-	-	-	-	-	-
Stage 2	-	-	-	-	-	-	-	-	-	-	-	-
Critical Hdwy	5.34	-	-	5.34	-	-	-	-	7.14	-	-	7.14
Critical Hdwy Stg 1	-	-	-	-	-	-	-	-	-	-	-	-
Critical Hdwy Stg 2	-	-	-	-	-	-	-	-	-	-	-	-
Follow-up Hdwy	3.12	-	-	3.12	-	-	-	-	3.92	-	-	3.92
Pot Cap-1 Maneuver	156	-	-	~ 48	-	-	0	0	~ 112	0	0	240
Stage 1	-	-	-	-	-	-	0	0	-	0	0	-
Stage 2	-	-	-	-	-	-	0	0	-	0	0	-
Platoon blocked, %		-	-		-	-						
Mov Cap-1 Maneuver	156	-	-	~ 48	-	-	-	-	~ 112	-	-	240
Mov Cap-2 Maneuver	-	-	-	-	-	-	-	-	-	-	-	-
Stage 1	-	-	-	-	-	-	-	-	-	-	-	-
Stage 2	-	-	-	-	-	-	-	-	-	-	-	-

Approach	EB	WB	NB	SB
HCM Control Delay, s	0.3	152	$ 469.3	23.3
HCM LOS			F	C

Minor Lane/Major Mvmt	NBLn1	EBL	EBT	EBR	WBL	WBT	WBR	SBLn1
Capacity (veh/h)	112	156	-	-	~ 48	-	-	240
HCM Lane V/C Ratio	1.825	0.181	-	-	4.076	-	-	0.181
HCM Control Delay (s)	$ 469.3	33.1	-	-	$ 1557.4	-	-	23.3
HCM Lane LOS	F	D	-	-	F	-	-	C
HCM 95th %tile Q(veh)	16.3	0.6	-	-	21.8	-	-	0.6

Notes			
~: Volume exceeds capacity	$: Delay exceeds 300s	+: Computation Not Defined	*: All major volume in platoon

Intersection	
Int Delay, s/veh	12.1

Movement	EBT	EBR	WBL	WBT	NBL	NBR
Lane Configurations						
Traffic Vol, veh/h	2209	51	28	1814	30	20
Future Vol, veh/h	2209	51	28	1814	30	20
Conflicting Peds, #/hr	0	0	0	0	0	0
Sign Control	Free	Free	Free	Free	Stop	Stop
RT Channelized	-	None	-	None	-	None
Storage Length	-	-	200	-	0	0
Veh in Median Storage, #	0	-	-	0	0	-
Grade, %	0	-	-	0	0	-
Peak Hour Factor	92	92	92	92	92	92
Heavy Vehicles, %	2	2	2	2	2	2
Mvmt Flow	2401	55	30	1972	33	22

Major/Minor	Major1		Major2		Minor1	
Conflicting Flow All	0	0	2456	0	3278	1228
Stage 1	-	-	-	-	2429	-
Stage 2	-	-	-	-	849	-
Critical Hdwy	-	-	5.34	-	5.74	7.14
Critical Hdwy Stg 1	-	-	-	-	6.64	-
Critical Hdwy Stg 2	-	-	-	-	6.04	-
Follow-up Hdwy	-	-	3.12	-	3.82	3.92
Pot Cap-1 Maneuver	-	-	73	-	~ 18	146
Stage 1	-	-	-	-	~ 30	-
Stage 2	-	-	-	-	344	-
Platoon blocked, %	-	-		-		
Mov Cap-1 Maneuver	-	-	73	-	~ 11	146
Mov Cap-2 Maneuver	-	-	-	-	~ 11	-
Stage 1	-	-	-	-	~ 30	-
Stage 2	-	-	-	-	203	-

Approach	EB	WB	NB
HCM Control Delay, s	0	1.3	$ 955.1
HCM LOS			F

Minor Lane/Major Mvmt	NBLn1	NBLn2	EBT	EBR	WBL	WBT
Capacity (veh/h)	11	146	-	-	73	-
HCM Lane V/C Ratio	2.964	0.149	-	-	0.417	-
HCM Control Delay (s)	$ 1569.2	33.9	-	-	85.8	-
HCM Lane LOS	F	D	-	-	F	-
HCM 95th %tile Q(veh)	5.1	0.5	-	-	1.6	-

Notes			
~: Volume exceeds capacity	$: Delay exceeds 300s	+: Computation Not Defined	*: All major volume in platoon

Movement	EBL	EBT	EBR	WBL	WBT	WBR	NBL	NBT	NBR	SBL	SBT	SBR
Lane Configurations												
Traffic Volume (veh/h)	503	1365	361	228	1136	473	476	1409	353	427	2280	317
Future Volume (veh/h)	503	1365	361	228	1136	473	476	1409	353	427	2280	317
Number	3	8	18	7	4	14	1	6	16	5	2	12
Initial Q (Qb), veh	0	0	0	0	0	0	0	0	0	0	0	0
Ped-Bike Adj(A_pbT)	1.00		1.00	1.00		1.00	1.00		1.00	1.00		1.00
Parking Bus, Adj	1.00	1.00	1.00	1.00	1.00	1.00	1.00	1.00	1.00	1.00	1.00	1.00
Adj Sat Flow, veh/h/ln	1863	1863	1863	1863	1863	1863	1863	1863	1900	1863	1863	1863
Adj Flow Rate, veh/h	541	1468	388	265	1321	550	588	1740	436	440	2351	327
Adj No. of Lanes	2	3	1	2	3	1	2	3	0	2	3	1
Peak Hour Factor	0.93	0.93	0.93	0.86	0.86	0.86	0.81	0.81	0.81	0.97	0.97	0.97
Percent Heavy Veh, %	2	2	2	2	2	2	2	2	2	2	2	2
Cap, veh/h	417	1418	1211	250	1140	518	1672	3165	778	355	1972	806
Arrive On Green	0.12	0.28	0.28	0.07	0.22	0.22	0.49	0.78	0.78	0.10	0.39	0.39
Sat Flow, veh/h	3442	5085	1583	3442	5085	1583	3442	4075	1002	3442	5085	1583
Grp Volume(v), veh/h	541	1468	388	265	1321	550	588	1442	734	440	2351	327
Grp Sat Flow(s),veh/h/ln	1721	1695	1583	1721	1695	1583	1721	1695	1686	1721	1695	1583
Q Serve(g_s), s	20.0	46.0	5.5	12.0	37.0	37.0	17.5	27.3	28.4	17.0	64.0	1.1
Cycle Q Clear(g_c), s	20.0	46.0	5.5	12.0	37.0	37.0	17.5	27.3	28.4	17.0	64.0	1.1
Prop In Lane	1.00		1.00	1.00		1.00	1.00		0.59	1.00		1.00
Lane Grp Cap(c), veh/h	417	1418	1211	250	1140	518	1672	2633	1310	355	1972	806
V/C Ratio(X)	1.30	1.04	0.32	1.06	1.16	1.06	0.35	0.55	0.56	1.24	1.19	0.41
Avail Cap(c_a), veh/h	417	1418	1211	250	1140	518	1672	2633	1310	355	1972	806
HCM Platoon Ratio	1.00	1.00	1.00	1.00	1.00	1.00	1.00	1.00	1.00	1.00	1.00	1.00
Upstream Filter(I)	1.00	1.00	1.00	1.00	1.00	1.00	1.00	1.00	1.00	1.00	1.00	1.00
Uniform Delay (d), s/veh	72.5	59.5	20.8	76.5	64.0	149.1	26.3	7.2	7.3	74.0	50.5	25.1
Incr Delay (d2), s/veh	150.3	33.6	0.1	73.2	81.4	56.8	0.0	0.8	1.7	130.2	91.7	1.5
Initial Q Delay(d3),s/veh	0.0	0.0	0.0	0.0	0.0	0.0	0.0	0.0	0.0	0.0	0.0	0.0
%ile BackOfQ(50%),veh/ln	18.2	25.9	10.0	8.2	25.9	58.2	8.3	12.9	13.7	14.5	46.7	9.4
LnGrp Delay(d),s/veh	222.8	93.1	20.9	149.7	145.4	205.9	26.3	8.0	9.0	204.2	142.2	26.6
LnGrp LOS	F	F	C	F	F	F	C	A	A	F	F	C
Approach Vol, veh/h		2397			2136			2764			3118	
Approach Delay, s/veh		110.7			161.5			12.2			138.8	
Approach LOS		F			F			B			F	

Timer	1	2	3	4	5	6	7	8
Assigned Phs	1	2	3	4	5	6	7	8
Phs Duration (G+Y+Rc), s	87.2	70.0	26.0	43.0	22.0	135.2	17.0	52.0
Change Period (Y+Rc), s	6.0	* 6	6.0	* 6	5.0	6.0	5.0	6.0
Max Green Setting (Gmax), s	22.0	* 64	20.0	* 37	17.0	69.0	12.0	45.0
Max Q Clear Time (g_c+I1), s	19.5	66.0	22.0	39.0	19.0	30.4	14.0	48.0
Green Ext Time (p_c), s	0.4	0.0	0.0	0.0	0.0	8.8	0.0	0.0

Intersection Summary	
HCM 2010 Ctrl Delay	103.4
HCM 2010 LOS	F

Notes

* HCM 2010 computational engine requires equal clearance times for the phases crossing the barrier.

Movement	EBL	EBT	EBR	WBL	WBT	WBR	NBL	NBT	NBR	SBL	SBT	SBR
Lane Configurations												
Traffic Volume (veh/h)	942	2429	755	344	1540	252	886	377	340	200	228	477
Future Volume (veh/h)	942	2429	755	344	1540	252	886	377	340	200	228	477
Number	1	6	16	5	2	12	7	4	14	3	8	18
Initial Q (Qb), veh	0	0	0	0	0	0	0	0	0	0	0	0
Ped-Bike Adj(A_pbT)	1.00		1.00	1.00		1.00	1.00		1.00	1.00		1.00
Parking Bus, Adj	1.00	1.00	1.00	1.00	1.00	1.00	1.00	1.00	1.00	1.00	1.00	1.00
Adj Sat Flow, veh/h/ln	1863	1863	1863	1863	1863	1900	1863	1863	1900	1863	1863	1863
Adj Flow Rate, veh/h	1024	2640	821	362	1621	265	953	405	366	217	248	518
Adj No. of Lanes	2	3	2	2	3	0	2	2	0	1	2	2
Peak Hour Factor	0.92	0.92	0.92	0.95	0.95	0.95	0.93	0.93	0.93	0.92	0.92	0.92
Percent Heavy Veh, %	2	2	2	2	2	2	2	2	2	2	2	2
Cap, veh/h	860	2684	2028	329	1543	251	768	315	281	178	197	851
Arrive On Green	0.25	0.53	0.53	0.07	0.35	0.35	0.20	0.18	0.18	0.08	0.06	0.06
Sat Flow, veh/h	3442	5085	2787	3442	4409	718	3442	1770	1583	1774	3539	2787
Grp Volume(v), veh/h	1024	2640	821	362	1245	641	953	405	366	217	248	518
Grp Sat Flow(s),veh/h/ln	1721	1695	1393	1721	1695	1736	1721	1770	1583	1774	1770	1393
Q Serve(g_s), s	45.0	91.8	7.1	13.0	63.0	63.0	36.0	32.0	32.0	14.0	10.0	9.8
Cycle Q Clear(g_c), s	45.0	91.8	7.1	13.0	63.0	63.0	36.0	32.0	32.0	14.0	10.0	9.8
Prop In Lane	1.00		1.00	1.00		0.41	1.00		1.00	1.00		1.00
Lane Grp Cap(c), veh/h	860	2684	2028	329	1187	608	768	315	281	178	197	851
V/C Ratio(X)	1.19	0.98	0.40	1.10	1.05	1.06	1.24	1.29	1.30	1.22	1.26	0.61
Avail Cap(c_a), veh/h	860	2684	2028	329	1187	608	768	315	281	178	197	851
HCM Platoon Ratio	1.00	1.00	1.00	1.00	1.00	1.00	1.00	1.00	1.00	1.00	1.00	1.00
Upstream Filter(I)	1.00	1.00	1.00	1.00	1.00	1.00	1.00	1.00	1.00	1.00	1.00	1.00
Uniform Delay (d), s/veh	67.5	41.7	2.6	81.9	58.5	58.5	63.1	74.0	74.0	76.8	85.0	22.6
Incr Delay (d2), s/veh	97.1	13.9	0.6	79.8	40.0	51.9	119.1	151.2	158.7	138.7	151.8	3.2
Initial Q Delay(d3),s/veh	0.0	0.0	0.0	0.0	0.0	0.0	0.0	0.0	0.0	0.0	0.0	0.0
%ile BackOfQ(50%),veh/ln	33.0	46.2	3.5	11.8	36.1	39.0	12.7	28.9	26.4	6.9	9.0	6.4
LnGrp Delay(d),s/veh	164.6	55.7	3.2	161.7	98.5	110.4	182.3	225.2	232.7	215.5	236.8	25.8
LnGrp LOS	F	E	A	F	F	F	F	F	F	F	F	C
Approach Vol, veh/h		4485			2248			1724			983	
Approach Delay, s/veh		70.9			112.1			203.1			120.9	
Approach LOS		E			F			F			F	

Timer	1	2	3	4	5	6	7	8
Assigned Phs	1	2	3	4	5	6	7	8
Phs Duration (G+Y+Rc), s	51.0	69.0	21.0	39.0	19.0	101.0	43.0	17.0
Change Period (Y+Rc), s	6.0	6.0	7.0	7.0	6.0	6.0	7.0	7.0
Max Green Setting (Gmax), s	45.0	63.0	14.0	32.0	13.0	95.0	36.0	10.0
Max Q Clear Time (g_c+I1), s	47.0	65.0	16.0	34.0	15.0	93.8	38.0	12.0
Green Ext Time (p_c), s	0.0	0.0	0.0	0.0	0.0	1.1	0.0	0.0

Intersection Summary	
HCM 2010 Ctrl Delay	110.1
HCM 2010 LOS	F

Intersection	
Int Delay, s/veh	1

Movement	EBL	EBT	WBT	WBR	SBL	SBR
Lane Configurations						
Traffic Vol, veh/h	0	2969	2045	92	0	91
Future Vol, veh/h	0	2969	2045	92	0	91
Conflicting Peds, #/hr	0	0	0	0	0	0
Sign Control	Free	Free	Free	Free	Stop	Stop
RT Channelized	-	None	-	None	-	None
Storage Length	-	-	-	-	-	0
Veh in Median Storage, #	-	0	0	-	0	-
Grade, %	-	0	0	-	0	-
Peak Hour Factor	92	92	92	92	92	92
Heavy Vehicles, %	2	2	2	2	2	2
Mvmt Flow	0	3227	2223	100	0	99

Major/Minor	Major1		Major2		Minor2	
Conflicting Flow All	-	0	-	0	-	1162
Stage 1	-	-	-	-	-	-
Stage 2	-	-	-	-	-	-
Critical Hdwy	-	-	-	-	-	7.14
Critical Hdwy Stg 1	-	-	-	-	-	-
Critical Hdwy Stg 2	-	-	-	-	-	-
Follow-up Hdwy	-	-	-	-	-	3.92
Pot Cap-1 Maneuver	0	-	-	-	0	162
Stage 1	0	-	-	-	0	-
Stage 2	0	-	-	-	0	-
Platoon blocked, %		-	-	-		
Mov Cap-1 Maneuver	-	-	-	-	-	162
Mov Cap-2 Maneuver	-	-	-	-	-	-
Stage 1	-	-	-	-	-	-
Stage 2	-	-	-	-	-	-

Approach	EB	WB	SB
HCM Control Delay, s	0	0	57
HCM LOS			F

Minor Lane/Major Mvmt	EBT	WBT	WBR	SBLn1
Capacity (veh/h)	-	-	-	162
HCM Lane V/C Ratio	-	-	-	0.611
HCM Control Delay (s)	-	-	-	57
HCM Lane LOS	-	-	-	F
HCM 95th %tile Q(veh)	-	-	-	3.3

Intersection	
Int Delay, s/veh	69.9

Movement	EBT	EBR	WBL	WBT	NBL	NBR
Lane Configurations						
Traffic Vol, veh/h	2969	0	0	2076	61	72
Future Vol, veh/h	2969	0	0	2076	61	72
Conflicting Peds, #/hr	0	0	0	0	0	0
Sign Control	Free	Free	Free	Free	Stop	Stop
RT Channelized	-	None	-	None	-	None
Storage Length	-	-	-	-	0	50
Veh in Median Storage, #	0	-	-	0	0	-
Grade, %	0	-	-	0	0	-
Peak Hour Factor	92	92	92	92	92	92
Heavy Vehicles, %	2	2	2	2	2	2
Mvmt Flow	3227	0	0	2257	66	78

Major/Minor	Major1		Major2		Minor1	
Conflicting Flow All	0	-	-	-	4130	1614
Stage 1	-	-	-	-	3227	-
Stage 2	-	-	-	-	903	-
Critical Hdwy	-	-	-	-	5.74	7.14
Critical Hdwy Stg 1	-	-	-	-	6.64	-
Critical Hdwy Stg 2	-	-	-	-	6.04	-
Follow-up Hdwy	-	-	-	-	3.82	3.92
Pot Cap-1 Maneuver	-	0	0	-	~ 6	79
Stage 1	-	0	0	-	~ 9	-
Stage 2	-	0	0	-	322	-
Platoon blocked, %	-			-		
Mov Cap-1 Maneuver	-	-	-	-	~ 6	79
Mov Cap-2 Maneuver	-	-	-	-	~ 6	-
Stage 1	-	-	-	-	~ 9	-
Stage 2	-	-	-	-	322	-

Approach	EB	WB	NB
HCM Control Delay, s	0	0	$ 2723.2
HCM LOS			F

Minor Lane/Major Mvmt	NBLn1	NBLn2	EBT	WBT
Capacity (veh/h)	6	79	-	-
HCM Lane V/C Ratio	11.051	0.991	-	-
HCM Control Delay (s)	$ 5712.1	191	-	-
HCM Lane LOS	F	F	-	-
HCM 95th %tile Q(veh)	10	5.4	-	-

Notes			
~: Volume exceeds capacity	$: Delay exceeds 300s	+: Computation Not Defined	*: All major volume in platoon

Intersection	
Int Delay, s/veh	0

Movement	EBL	EBT	WBT	WBR	SBL	SBR
Lane Configurations						
Traffic Vol, veh/h	0	3041	2045	27	0	4
Future Vol, veh/h	0	3041	2045	27	0	4
Conflicting Peds, #/hr	0	0	0	0	0	0
Sign Control	Free	Free	Free	Free	Stop	Stop
RT Channelized	-	None	-	None	-	None
Storage Length	-	-	-	-	-	0
Veh in Median Storage, #	-	0	0	-	0	-
Grade, %	-	0	0	-	0	-
Peak Hour Factor	92	92	92	92	92	92
Heavy Vehicles, %	2	2	2	2	2	2
Mvmt Flow	0	3305	2223	29	0	4

Major/Minor	Major1		Major2		Minor2	
Conflicting Flow All	-	0	-	0	-	1126
Stage 1	-	-	-	-	-	-
Stage 2	-	-	-	-	-	-
Critical Hdwy	-	-	-	-	-	7.14
Critical Hdwy Stg 1	-	-	-	-	-	-
Critical Hdwy Stg 2	-	-	-	-	-	-
Follow-up Hdwy	-	-	-	-	-	3.92
Pot Cap-1 Maneuver	0	-	-	-	0	171
Stage 1	0	-	-	-	0	-
Stage 2	0	-	-	-	0	-
Platoon blocked, %		-	-	-		
Mov Cap-1 Maneuver	-	-	-	-	-	171
Mov Cap-2 Maneuver	-	-	-	-	-	-
Stage 1	-	-	-	-	-	-
Stage 2	-	-	-	-	-	-

Approach	EB	WB	SB
HCM Control Delay, s	0	0	26.6
HCM LOS			D

Minor Lane/Major Mvmt	EBT	WBT	WBR	SBLn1
Capacity (veh/h)	-	-	-	171
HCM Lane V/C Ratio	-	-	-	0.025
HCM Control Delay (s)	-	-	-	26.6
HCM Lane LOS	-	-	-	D
HCM 95th %tile Q(veh)	-	-	-	0.1

Movement	EBL	EBT	EBR	WBL	WBT	WBR	NBL	NBT	NBR	SBL	SBT	SBR
Lane Configurations												
Traffic Volume (veh/h)	250	2409	382	167	1720	180	194	122	223	175	74	158
Future Volume (veh/h)	250	2409	382	167	1720	180	194	122	223	175	74	158
Number	1	6	16	5	2	12	7	4	14	3	8	18
Initial Q (Qb), veh	0	0	0	0	0	0	0	0	0	0	0	0
Ped-Bike Adj(A_pbT)	1.00		1.00	1.00		1.00	1.00		1.00	1.00		1.00
Parking Bus, Adj	1.00	1.00	1.00	1.00	1.00	1.00	1.00	1.00	1.00	1.00	1.00	1.00
Adj Sat Flow, veh/h/ln	1863	1863	1900	1863	1863	1900	1863	1863	1863	1863	1863	1863
Adj Flow Rate, veh/h	281	2707	429	186	1911	200	242	152	279	211	89	190
Adj No. of Lanes	1	3	0	1	3	0	1	1	1	1	1	1
Peak Hour Factor	0.89	0.89	0.89	0.90	0.90	0.90	0.80	0.80	0.80	0.83	0.83	0.83
Percent Heavy Veh, %	2	2	2	2	2	2	2	2	2	2	2	2
Cap, veh/h	305	2647	399	224	2868	298	242	250	212	197	250	212
Arrive On Green	0.09	0.59	0.59	0.20	1.00	1.00	0.05	0.13	0.13	0.05	0.13	0.13
Sat Flow, veh/h	1774	4461	673	1774	4680	487	1774	1863	1583	1774	1863	1583
Grp Volume(v), veh/h	281	2024	1112	186	1381	730	242	152	279	211	89	190
Grp Sat Flow(s),veh/h/ln	1774	1695	1744	1774	1695	1777	1774	1863	1583	1774	1863	1583
Q Serve(g_s), s	11.7	89.0	89.0	10.8	0.0	0.0	8.0	11.5	16.3	8.0	6.5	17.7
Cycle Q Clear(g_c), s	11.7	89.0	89.0	10.8	0.0	0.0	8.0	11.5	16.3	8.0	6.5	17.7
Prop In Lane	1.00		0.39	1.00		0.27	1.00		1.00	1.00		1.00
Lane Grp Cap(c), veh/h	305	2012	1035	224	2078	1089	242	250	212	197	250	212
V/C Ratio(X)	0.92	1.01	1.07	0.83	0.66	0.67	1.00	0.61	1.31	1.07	0.36	0.89
Avail Cap(c_a), veh/h	424	2012	1035	224	2078	1089	242	310	264	197	310	264
HCM Platoon Ratio	1.00	1.00	1.00	2.00	2.00	2.00	1.00	1.00	1.00	1.00	1.00	1.00
Upstream Filter(I)	1.00	1.00	1.00	0.14	0.14	0.14	1.00	1.00	1.00	1.00	1.00	1.00
Uniform Delay (d), s/veh	21.7	30.5	30.5	57.1	0.0	0.0	62.8	61.2	42.4	62.2	59.1	63.9
Incr Delay (d2), s/veh	17.3	21.6	50.3	3.5	0.2	0.5	57.9	1.8	170.6	84.0	0.6	25.0
Initial Q Delay(d3),s/veh	0.0	0.0	0.0	0.0	0.0	0.0	0.0	0.0	0.0	0.0	0.0	0.0
%ile BackOfQ(50%),veh/ln	7.2	47.4	57.0	7.4	0.1	0.1	12.5	6.1	17.6	11.6	3.4	9.2
LnGrp Delay(d),s/veh	39.0	52.1	80.8	60.6	0.2	0.5	120.7	63.0	213.1	146.3	59.7	88.9
LnGrp LOS	D	F	F	E	A	A	F	E	F	F	E	F
Approach Vol, veh/h		3417			2297			673			490	
Approach Delay, s/veh		60.3			5.2			146.0			108.3	
Approach LOS		E			A			F			F	

Timer	1	2	3	4	5	6	7	8
Assigned Phs	1	2	3	4	5	6	7	8
Phs Duration (G+Y+Rc), s	17.0	96.9	11.0	25.1	19.9	94.0	11.0	25.1
Change Period (Y+Rc), s	3.0	5.0	3.0	5.0	5.0	* 5	3.0	5.0
Max Green Setting (Gmax), s	24.0	77.0	8.0	25.0	12.0	* 89	8.0	25.0
Max Q Clear Time (g_c+I1), s	13.7	2.0	10.0	18.3	12.8	91.0	10.0	19.7
Green Ext Time (p_c), s	0.3	6.7	0.0	0.9	0.0	0.0	0.0	0.4

Intersection Summary	
HCM 2010 Ctrl Delay	53.7
HCM 2010 LOS	D

Notes

* HCM 2010 computational engine requires equal clearance times for the phases crossing the barrier.

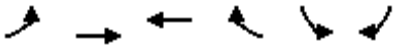

Movement	EBL	EBT	WBT	WBR	SBL	SBR
Lane Configurations						
Traffic Volume (veh/h)	386	2421	1880	536	313	227
Future Volume (veh/h)	386	2421	1880	536	313	227
Number	1	6	2	12	3	18
Initial Q (Qb), veh	0	0	0	0	0	0
Ped-Bike Adj(A_pbT)	1.00			1.00	1.00	1.00
Parking Bus, Adj	1.00	1.00	1.00	1.00	1.00	1.00
Adj Sat Flow, veh/h/ln	1863	1863	1863	1900	1863	1863
Adj Flow Rate, veh/h	444	2783	2112	602	326	236
Adj No. of Lanes	1	3	3	0	1	1
Peak Hour Factor	0.87	0.87	0.89	0.89	0.96	0.96
Percent Heavy Veh, %	2	2	2	2	2	2
Cap, veh/h	524	4212	2105	562	319	710
Arrive On Green	0.54	1.00	0.53	0.53	0.18	0.18
Sat Flow, veh/h	1774	5253	4165	1067	1774	1583
Grp Volume(v), veh/h	444	2783	1769	945	326	236
Grp Sat Flow(s),veh/h/ln	1774	1695	1695	1674	1774	1583
Q Serve(g_s), s	26.7	0.0	77.5	79.0	27.0	0.0
Cycle Q Clear(g_c), s	26.7	0.0	77.5	79.0	27.0	0.0
Prop In Lane	1.00			0.64	1.00	1.00
Lane Grp Cap(c), veh/h	524	4212	1786	882	319	710
V/C Ratio(X)	0.85	0.66	0.99	1.07	1.02	0.33
Avail Cap(c_a), veh/h	524	4212	1786	882	319	710
HCM Platoon Ratio	2.00	2.00	1.00	1.00	1.00	1.00
Upstream Filter(I)	0.09	0.09	1.00	1.00	1.00	1.00
Uniform Delay (d), s/veh	30.2	0.0	35.1	35.5	61.5	26.8
Incr Delay (d2), s/veh	1.3	0.1	19.3	51.2	55.8	0.2
Initial Q Delay(d3),s/veh	0.0	0.0	0.0	0.0	0.0	0.0
%ile BackOfQ(50%),veh/ln	15.0	0.0	40.9	48.8	18.2	6.4
LnGrp Delay(d),s/veh	31.5	0.1	54.4	86.7	117.4	27.0
LnGrp LOS	C	A	D	F	F	C
Approach Vol, veh/h		3227	2714		562	
Approach Delay, s/veh		4.4	65.7		79.4	
Approach LOS		A	E		E	

Timer	1	2	3	4	5	6	7	8
Assigned Phs	1	2				6		8
Phs Duration (G+Y+Rc), s	45.2	84.0				129.2		32.0
Change Period (Y+Rc), s	5.0	* 5				5.0		5.0
Max Green Setting (Gmax), s	31.0	* 79				113.0		27.0
Max Q Clear Time (g_c+I2), s	29.7	81.0				2.0		29.0
Green Ext Time (p_c), s	0.3	0.0				15.3		0.0

Intersection Summary	
HCM 2010 Ctrl Delay	36.4
HCM 2010 LOS	D

Notes

* HCM 2010 computational engine requires equal clearance times for the phases crossing the barrier.

Intersection	
Int Delay, s/veh	0.5

Movement	EBL	EBT	EBR	WBL	WBT	WBR	NBL	NBT	NBR	SBL	SBT	SBR
Lane Configurations												
Traffic Vol, veh/h	0	2734	0	0	2364	18	0	0	0	0	0	52
Future Vol, veh/h	0	2734	0	0	2364	18	0	0	0	0	0	52
Conflicting Peds, #/hr	0	0	0	0	0	0	0	0	0	0	0	0
Sign Control	Free	Free	Free	Free	Free	Free	Stop	Stop	Stop	Stop	Stop	Stop
RT Channelized	-	-	None	-	-	None	-	-	None	-	-	None
Storage Length	-	-	-	75	-	-	-	-	-	-	-	0
Veh in Median Storage, #	-	0	-	-	0	-	-	-	-	-	0	-
Grade, %	-	0	-	-	0	-	-	0	-	-	0	-
Peak Hour Factor	92	92	92	92	92	92	92	92	92	92	92	92
Heavy Vehicles, %	2	2	2	2	2	2	2	2	2	2	2	2
Mvmt Flow	0	2972	0	0	2570	20	0	0	0	0	0	57

Major/Minor	Major1			Major2					Minor2		
Conflicting Flow All	-	0	-	2972	0	0			-	-	1295
Stage 1	-	-	-	-	-	-			-	-	-
Stage 2	-	-	-	-	-	-			-	-	-
Critical Hdwy	-	-	-	5.34	-	-			-	-	7.14
Critical Hdwy Stg 1	-	-	-	-	-	-			-	-	-
Critical Hdwy Stg 2	-	-	-	-	-	-			-	-	-
Follow-up Hdwy	-	-	-	3.12	-	-			-	-	3.92
Pot Cap-1 Maneuver	0	-	0	39	-	-			0	0	131
Stage 1	0	-	0	-	-	-			0	0	-
Stage 2	0	-	0	-	-	-			0	0	-
Platoon blocked, %		-			-	-					
Mov Cap-1 Maneuver	-	-	-	39	-	-			-	0	131
Mov Cap-2 Maneuver	-	-	-	-	-	-			-	0	-
Stage 1	-	-	-	-	-	-			-	0	-
Stage 2	-	-	-	-	-	-			-	0	-

Approach	EB	WB	SB
HCM Control Delay, s	0	0	51.9
HCM LOS			F

Minor Lane/Major Mvmt	EBT	WBL	WBT	WBR	SBLn1
Capacity (veh/h)	-	39	-	-	131
HCM Lane V/C Ratio	-	-	-	-	0.431
HCM Control Delay (s)	-	0	-	-	51.9
HCM Lane LOS	-	A	-	-	F
HCM 95th %tile Q(veh)	-	0	-	-	1.9

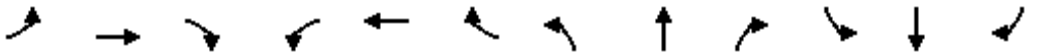

Movement	EBL	EBT	EBR	WBL	WBT	WBR	NBL	NBT	NBR	SBL	SBT	SBR
Lane Configurations												
Traffic Volume (vph)	380	2316	47	73	2174	132	69	21	91	67	5	140
Future Volume (vph)	380	2316	47	73	2174	132	69	21	91	67	5	140
Ideal Flow (vphpl)	1900	1900	1900	1900	1900	1900	1900	1900	1900	1900	1900	1900
Total Lost time (s)	6.0	6.0		6.0	6.0			7.0	7.0		7.0	7.0
Lane Util. Factor	1.00	0.91		1.00	0.91			1.00	1.00		1.00	1.00
Frt	1.00	1.00		1.00	0.99			1.00	0.85		1.00	0.85
Flt Protected	0.95	1.00		0.95	1.00			0.96	1.00		0.96	1.00
Satd. Flow (prot)	1770	5070		1770	5042			1794	1583		1780	1583
Flt Permitted	0.04	1.00		0.05	1.00			0.96	1.00		0.96	1.00
Satd. Flow (perm)	81	5070		87	5042			1794	1583		1780	1583
Peak-hour factor, PHF	0.88	0.88	0.88	0.95	0.95	0.95	0.77	0.77	0.77	0.55	0.55	0.55
Adj. Flow (vph)	432	2632	53	77	2288	139	90	27	118	122	9	255
RTOR Reduction (vph)	0	1	0	0	4	0	0	0	110	0	0	121
Lane Group Flow (vph)	432	2684	0	77	2423	0	0	117	8	0	131	134
Turn Type	pm+pt	NA		pm+pt	NA		Split	NA	Perm	Split	NA	Perm
Protected Phases	1	6		5	2		4	4		3	3	
Permitted Phases	6			2					4			3
Actuated Green, G (s)	131.6	116.8		94.8	86.0			12.0	12.0		16.4	16.4
Effective Green, g (s)	131.6	116.8		94.8	86.0			12.0	12.0		16.4	16.4
Actuated g/C Ratio	0.73	0.65		0.53	0.48			0.07	0.07		0.09	0.09
Clearance Time (s)	6.0	6.0		6.0	6.0			7.0	7.0		7.0	7.0
Vehicle Extension (s)	3.0	1.0		3.0	1.0			2.5	2.5		2.5	2.5
Lane Grp Cap (vph)	430	3289		128	2408			119	105		162	144
v/s Ratio Prot	c0.22	0.53		0.03	0.48			c0.07			0.07	
v/s Ratio Perm	c0.51			0.29					0.00			c0.08
v/c Ratio	1.00	0.82		0.60	1.01			0.98	0.07		0.81	0.93
Uniform Delay, d1	63.4	23.6		29.4	47.0			83.9	78.8		80.3	81.2
Progression Factor	1.00	1.00		1.00	1.00			1.00	1.00		1.00	1.00
Incremental Delay, d2	44.6	2.4		7.7	19.9			76.8	0.2		24.2	54.5
Delay (s)	108.0	25.9		37.1	66.9			160.7	79.0		104.5	135.7
Level of Service	F	C		D	E			F	E		F	F
Approach Delay (s)		37.3			66.0			119.7			125.1	
Approach LOS		D			E			F			F	

Intersection Summary			
HCM 2000 Control Delay	57.3	HCM 2000 Level of Service	E
HCM 2000 Volume to Capacity ratio	1.01		
Actuated Cycle Length (s)	180.0	Sum of lost time (s)	26.0
Intersection Capacity Utilization	93.4%	ICU Level of Service	F
Analysis Period (min)	15		

c Critical Lane Group

Movement	EBT	EBR	WBL	WBT	NBL	NBR
Lane Configurations						
Traffic Volume (veh/h)	2173	292	250	2038	341	404
Future Volume (veh/h)	2173	292	250	2038	341	404
Number	6	16	5	2	7	14
Initial Q (Qb), veh	0	0	0	0	0	0
Ped-Bike Adj(A_pbT)		1.00	1.00		1.00	1.00
Parking Bus, Adj	1.00	1.00	1.00	1.00	1.00	1.00
Adj Sat Flow, veh/h/ln	1863	1900	1863	1863	1863	1863
Adj Flow Rate, veh/h	2556	344	258	2101	388	459
Adj No. of Lanes	3	0	1	3	1	1
Peak Hour Factor	0.85	0.85	0.97	0.97	0.88	0.88
Percent Heavy Veh, %	2	2	2	2	2	2
Cap, veh/h	2584	334	369	3971	402	645
Arrive On Green	0.57	0.57	0.36	1.00	0.23	0.23
Sat Flow, veh/h	4728	589	1774	5253	1774	1583
Grp Volume(v), veh/h	1873	1027	258	2101	388	459
Grp Sat Flow(s),veh/h/ln	1695	1759	1774	1695	1774	1583
Q Serve(g_s), s	80.2	85.0	13.9	0.0	32.5	9.2
Cycle Q Clear(g_c), s	80.2	85.0	13.9	0.0	32.5	9.2
Prop In Lane		0.33	1.00		1.00	1.00
Lane Grp Cap(c), veh/h	1921	997	369	3971	402	645
V/C Ratio(X)	0.97	1.03	0.70	0.53	0.96	0.71
Avail Cap(c_a), veh/h	1921	997	369	3971	402	645
HCM Platoon Ratio	1.00	1.00	2.00	2.00	1.00	1.00
Upstream Filter(I)	0.50	0.50	0.71	0.71	1.00	1.00
Uniform Delay (d), s/veh	31.5	32.5	42.4	0.0	57.4	37.1
Incr Delay (d2), s/veh	9.8	28.6	3.5	0.4	35.6	3.5
Initial Q Delay(d3),s/veh	0.0	0.0	0.0	0.0	0.0	0.0
%ile BackOfQ(50%),veh/ln	39.8	48.9	9.1	0.1	19.9	22.5
LnGrp Delay(d),s/veh	41.2	61.1	45.9	0.4	93.0	40.5
LnGrp LOS	D	F	D	A	F	D
Approach Vol, veh/h	2900			2359	847	
Approach Delay, s/veh	48.3			5.3	64.6	
Approach LOS	D			A	E	

Timer	1	2	3	4	5	6	7	8
Assigned Phs		2		4	5	6		
Phs Duration (G+Y+Rc), s		122.1		39.0	32.1	90.0		
Change Period (Y+Rc), s		5.0		5.0	5.0	* 5		
Max Green Setting (Gmax), s		106.0		34.0	18.0	* 85		
Max Q Clear Time (g_c+I1), s		2.0		34.5	15.9	87.0		
Green Ext Time (p_c), s		7.9		0.0	0.1	0.0		

Intersection Summary	
HCM 2010 Ctrl Delay	33.9
HCM 2010 LOS	C

Notes

* HCM 2010 computational engine requires equal clearance times for the phases crossing the barrier.

Movement	EBL	EBT	EBR	WBL	WBT	WBR	NBL	NBT	NBR	SBL	SBT	SBR
Lane Configurations												
Traffic Volume (veh/h)	126	2146	431	123	2137	36	122	1	109	13	13	29
Future Volume (veh/h)	126	2146	431	123	2137	36	122	1	109	13	13	29
Number	1	6	16	5	2	12	7	4	14	3	8	18
Initial Q (Qb), veh	0	0	0	0	0	0	0	0	0	0	0	0
Ped-Bike Adj(A_pbT)	1.00		1.00	1.00		1.00	1.00		1.00	1.00		1.00
Parking Bus, Adj	1.00	1.00	1.00	1.00	1.00	1.00	1.00	1.00	1.00	1.00	1.00	1.00
Adj Sat Flow, veh/h/ln	1863	1863	1900	1863	1863	1900	1863	1863	1900	1900	1863	1900
Adj Flow Rate, veh/h	158	2682	539	127	2203	37	152	1	136	18	18	40
Adj No. of Lanes	1	3	0	2	3	0	2	1	0	0	1	0
Peak Hour Factor	0.80	0.80	0.80	0.97	0.97	0.97	0.80	0.80	0.80	0.72	0.72	0.72
Percent Heavy Veh, %	2	2	2	2	2	2	2	2	2	2	2	2
Cap, veh/h	439	2894	546	540	2988	50	295	1	186	42	44	63
Arrive On Green	0.40	1.00	1.00	0.07	0.39	0.39	0.12	0.12	0.12	0.12	0.12	0.12
Sat Flow, veh/h	1774	4298	811	3442	5151	86	2599	12	1573	108	374	536
Grp Volume(v), veh/h	158	2079	1142	127	1449	791	152	0	137	76	0	0
Grp Sat Flow(s),veh/h/ln	1774	1695	1720	1721	1695	1848	1299	0	1585	1018	0	0
Q Serve(g_s), s	1.3	0.0	0.0	0.0	54.9	55.1	1.7	0.0	12.5	0.7	0.0	0.0
Cycle Q Clear(g_c), s	1.3	0.0	0.0	0.0	54.9	55.1	14.9	0.0	12.5	13.2	0.0	0.0
Prop In Lane	1.00		0.47	1.00		0.05	1.00		0.99	0.24		0.53
Lane Grp Cap(c), veh/h	439	2283	1158	540	1966	1072	295	0	188	150	0	0
V/C Ratio(X)	0.36	0.91	0.99	0.24	0.74	0.74	0.52	0.00	0.73	0.51	0.00	0.00
Avail Cap(c_a), veh/h	439	2283	1158	540	1966	1072	490	0	306	266	0	0
HCM Platoon Ratio	2.00	2.00	2.00	0.67	0.67	0.67	1.00	1.00	1.00	1.00	1.00	1.00
Upstream Filter(I)	0.12	0.12	0.12	1.00	1.00	1.00	1.00	0.00	1.00	1.00	0.00	0.00
Uniform Delay (d), s/veh	32.6	0.0	0.0	37.7	36.0	36.1	65.5	0.0	63.8	61.5	0.0	0.0
Incr Delay (d2), s/veh	0.0	0.9	6.5	0.1	2.5	4.6	1.0	0.0	4.0	2.0	0.0	0.0
Initial Q Delay(d3),s/veh	0.0	0.0	0.0	0.0	0.0	0.0	0.0	0.0	0.0	0.0	0.0	0.0
%ile BackOfQ(50%),veh/ln	4.0	0.3	2.1	2.4	26.4	29.5	3.1	0.0	5.7	3.1	0.0	0.0
LnGrp Delay(d),s/veh	32.6	0.9	6.5	37.8	38.6	40.7	66.5	0.0	67.8	63.4	0.0	0.0
LnGrp LOS	C	A	A	D	D	D	E		E	E		
Approach Vol, veh/h		3379			2367			289			76	
Approach Delay, s/veh		4.3			39.2			67.1			63.4	
Approach LOS		A			D			E			E	

Timer	1	2	3	4	5	6	7	8
Assigned Phs	1	2		4	5	6		8
Phs Duration (G+Y+Rc), s	13.2	93.0		23.8	19.2	107.0		23.8
Change Period (Y+Rc), s	3.0	6.0		6.0	3.0	6.0		6.0
Max Green Setting (Gmax), s	10.0	87.0		29.0	5.0	101.0		29.0
Max Q Clear Time (g_c+I1), s	3.3	57.1		16.9	2.0	2.0		15.2
Green Ext Time (p_c), s	0.2	6.9		0.9	0.1	18.9		0.2

Intersection Summary	
HCM 2010 Ctrl Delay	21.5
HCM 2010 LOS	C

Movement	EBL	EBT	EBR	WBL	WBT	WBR	NBL	NBT	NBR	SBL	SBT	SBR
Lane Configurations												
Traffic Volume (veh/h)	8	1961	299	422	2078	9	205	0	277	5	6	13
Future Volume (veh/h)	8	1961	299	422	2078	9	205	0	277	5	6	13
Number	1	6	16	5	2	12	7	4	14	3	8	18
Initial Q (Qb), veh	0	0	0	0	0	0	0	0	0	0	0	0
Ped-Bike Adj(A_pbT)	1.00		1.00	1.00		1.00	1.00		1.00	1.00		1.00
Parking Bus, Adj	1.00	1.00	1.00	1.00	1.00	1.00	1.00	1.00	1.00	1.00	1.00	1.00
Adj Sat Flow, veh/h/ln	1863	1863	1900	1863	1863	1900	1863	1863	1863	1900	1863	1900
Adj Flow Rate, veh/h	9	2179	332	426	2099	9	228	0	308	9	11	24
Adj No. of Lanes	1	3	0	1	3	0	1	1	1	0	1	0
Peak Hour Factor	0.90	0.90	0.90	0.99	0.99	0.99	0.90	0.90	0.90	0.55	0.55	0.55
Percent Heavy Veh, %	2	2	2	2	2	2	2	2	2	2	2	2
Cap, veh/h	141	2177	323	409	3782	16	344	392	333	78	98	177
Arrive On Green	0.33	0.33	0.33	0.41	1.00	1.00	0.21	0.00	0.21	0.21	0.21	0.21
Sat Flow, veh/h	193	4471	664	1774	5227	22	1368	1863	1583	233	468	840
Grp Volume(v), veh/h	9	1639	872	426	1361	747	228	0	308	44	0	0
Grp Sat Flow(s),veh/h/ln	193	1695	1746	1774	1695	1859	1368	1863	1583	1541	0	0
Q Serve(g_s), s	4.9	73.2	74.0	31.0	0.0	0.0	19.7	0.0	29.0	0.0	0.0	0.0
Cycle Q Clear(g_c), s	4.9	73.2	74.0	31.0	0.0	0.0	22.9	0.0	29.0	3.2	0.0	0.0
Prop In Lane	1.00		0.38	1.00		0.01	1.00		1.00	0.20		0.55
Lane Grp Cap(c), veh/h	141	1650	850	409	2453	1345	344	392	333	353	0	0
V/C Ratio(X)	0.06	0.99	1.03	1.04	0.55	0.56	0.66	0.00	0.92	0.12	0.00	0.00
Avail Cap(c_a), veh/h	141	1650	850	409	2453	1345	344	392	333	353	0	0
HCM Platoon Ratio	0.67	0.67	0.67	2.00	2.00	2.00	1.00	1.00	1.00	1.00	1.00	1.00
Upstream Filter(I)	1.00	1.00	1.00	1.00	1.00	1.00	1.00	0.00	1.00	1.00	0.00	0.00
Uniform Delay (d), s/veh	27.9	50.9	51.2	43.2	0.0	0.0	56.0	0.0	58.8	48.6	0.0	0.0
Incr Delay (d2), s/veh	0.9	20.5	37.8	55.6	0.9	1.7	9.7	0.0	33.3	0.7	0.0	0.0
Initial Q Delay(d3),s/veh	0.0	0.0	0.0	0.0	0.0	0.0	0.0	0.0	0.0	0.0	0.0	0.0
%ile BackOfQ(50%),veh/ln	0.3	39.0	44.6	23.4	0.3	0.6	9.9	0.0	15.7	1.6	0.0	0.0
LnGrp Delay(d),s/veh	28.8	71.5	89.0	98.8	0.9	1.7	65.7	0.0	92.1	49.4	0.0	0.0
LnGrp LOS	C	E	F	F	A	A	E		F	D		
Approach Vol, veh/h		2520			2534			536			44	
Approach Delay, s/veh		77.4			17.6			80.9			49.4	
Approach LOS		E			B			F			D	

Timer	1	2	3	4	5	6	7	8
Assigned Phs		2		4	5	6		8
Phs Duration (G+Y+Rc), s		115.0		37.0	36.0	79.0		37.0
Change Period (Y+Rc), s		5.0		5.0	5.0	* 5		5.0
Max Green Setting (Gmax), s		108.0		32.0	31.0	* 74		32.0
Max Q Clear Time (g_c+I1), s		2.0		31.0	33.0	76.0		5.2
Green Ext Time (p_c), s		6.4		0.2	0.0	0.0		0.2

Intersection Summary	
HCM 2010 Ctrl Delay	50.6
HCM 2010 LOS	D

Notes

* HCM 2010 computational engine requires equal clearance times for the phases crossing the barrier.

Movement	EBL	EBT	EBR	WBL	WBT	WBR	NBL	NBT	NBR	SBL	SBT	SBR
Lane Configurations												
Traffic Volume (veh/h)	141	2102	0	52	2148	400	2	0	40	169	0	80
Future Volume (veh/h)	141	2102	0	52	2148	400	2	0	40	169	0	80
Number	1	6	16	5	2	12	7	4	14	3	8	18
Initial Q (Qb), veh	0	0	0	0	0	0	0	0	0	0	0	0
Ped-Bike Adj(A_pbT)	1.00		1.00	1.00		1.00	1.00		1.00	1.00		1.00
Parking Bus, Adj	1.00	1.00	1.00	1.00	1.00	1.00	1.00	1.00	1.00	1.00	1.00	1.00
Adj Sat Flow, veh/h/ln	1863	1863	1900	1863	1863	1900	1900	1863	1900	1863	1863	1900
Adj Flow Rate, veh/h	155	2310	0	55	2261	421	2	0	48	186	0	88
Adj No. of Lanes	1	3	0	1	3	0	0	1	0	1	1	0
Peak Hour Factor	0.91	0.91	0.91	0.95	0.95	0.95	0.84	0.84	0.84	0.91	0.91	0.91
Percent Heavy Veh, %	2	2	2	2	2	2	2	2	2	2	2	2
Cap, veh/h	246	3413	0	213	2599	464	28	9	301	323	0	312
Arrive On Green	0.21	1.00	0.00	0.05	0.60	0.60	0.20	0.00	0.20	0.20	0.00	0.20
Sat Flow, veh/h	1774	5253	0	1774	4340	776	17	47	1523	1352	0	1583
Grp Volume(v), veh/h	155	2310	0	55	1745	937	50	0	0	186	0	88
Grp Sat Flow(s),veh/h/ln	1774	1695	0	1774	1695	1726	1587	0	0	1352	0	1583
Q Serve(g_s), s	6.6	0.0	0.0	2.0	64.7	72.4	0.0	0.0	0.0	14.3	0.0	7.2
Cycle Q Clear(g_c), s	6.6	0.0	0.0	2.0	64.7	72.4	4.0	0.0	0.0	18.3	0.0	7.2
Prop In Lane	1.00		0.00	1.00		0.45	0.04		0.96	1.00		1.00
Lane Grp Cap(c), veh/h	246	3413	0	213	2030	1033	338	0	0	323	0	313
V/C Ratio(X)	0.63	0.68	0.00	0.26	0.86	0.91	0.15	0.00	0.00	0.58	0.00	0.28
Avail Cap(c_a), veh/h	246	3413	0	213	2030	1033	338	0	0	323	0	313
HCM Platoon Ratio	2.00	2.00	2.00	1.00	1.00	1.00	1.00	1.00	1.00	1.00	1.00	1.00
Upstream Filter(I)	1.00	1.00	0.00	1.00	1.00	1.00	1.00	0.00	0.00	1.00	0.00	1.00
Uniform Delay (d), s/veh	54.4	0.0	0.0	13.1	25.2	26.8	50.5	0.0	0.0	56.0	0.0	51.8
Incr Delay (d2), s/veh	11.6	1.1	0.0	2.9	5.0	12.9	0.9	0.0	0.0	7.3	0.0	2.2
Initial Q Delay(d3),s/veh	0.0	0.0	0.0	0.0	0.0	0.0	0.0	0.0	0.0	0.0	0.0	0.0
%ile BackOfQ(50%),veh/ln	6.5	0.3	0.0	1.1	31.5	38.1	1.8	0.0	0.0	7.9	0.0	3.3
LnGrp Delay(d),s/veh	66.0	1.1	0.0	16.0	30.3	39.7	51.5	0.0	0.0	63.2	0.0	54.1
LnGrp LOS	E	A		B	C	D	D			E		D
Approach Vol, veh/h		2465			2737			50			274	
Approach Delay, s/veh		5.2			33.2			51.5			60.3	
Approach LOS		A			C			D			E	

Timer	1	2	3	4	5	6	7	8
Assigned Phs	1	2		4	5	6		8
Phs Duration (G+Y+Rc), s	21.0	96.0		35.0	10.0	107.0		35.0
Change Period (Y+Rc), s	5.0	* 5		5.0	3.0	5.0		5.0
Max Green Setting (Gmax), s	16.0	* 91		30.0	7.0	100.0		30.0
Max Q Clear Time (g_c+I1), s	8.6	74.4		6.0	4.0	2.0		20.3
Green Ext Time (p_c), s	0.1	8.1		0.2	0.0	9.6		0.6

Intersection Summary	
HCM 2010 Ctrl Delay	22.2
HCM 2010 LOS	C

Notes

* HCM 2010 computational engine requires equal clearance times for the phases crossing the barrier.

Movement	EBL	EBT	EBR	WBL	WBT	WBR	NBL	NBT	NBR	SBL	SBT	SBR
Lane Configurations												
Traffic Volume (veh/h)	621	1435	187	392	1520	429	358	1269	337	298	1115	755
Future Volume (veh/h)	621	1435	187	392	1520	429	358	1269	337	298	1115	755
Number	3	8	18	7	4	14	1	6	16	5	2	12
Initial Q (Qb), veh	0	0	0	0	0	0	0	0	0	0	0	0
Ped-Bike Adj(A_pbT)	1.00		1.00	1.00		1.00	1.00		1.00	1.00		1.00
Parking Bus, Adj	1.00	1.00	1.00	1.00	1.00	1.00	1.00	1.00	1.00	1.00	1.00	1.00
Adj Sat Flow, veh/h/ln	1863	1863	1900	1863	1863	1900	1863	1863	1900	1863	1863	1863
Adj Flow Rate, veh/h	698	1612	210	417	1617	456	389	1379	366	327	1225	830
Adj No. of Lanes	2	3	0	2	3	0	2	3	0	2	3	1
Peak Hour Factor	0.89	0.89	0.89	0.94	0.94	0.94	0.92	0.92	0.92	0.91	0.91	0.91
Percent Heavy Veh, %	2	2	2	2	2	2	2	2	2	2	2	2
Cap, veh/h	442	1562	203	393	1301	361	270	1345	356	221	1635	712
Arrive On Green	0.13	0.34	0.34	0.11	0.33	0.33	0.08	0.34	0.34	0.06	0.32	0.32
Sat Flow, veh/h	3442	4556	592	3442	3960	1099	3442	4006	1060	3442	5085	1583
Grp Volume(v), veh/h	698	1198	624	417	1381	692	389	1166	579	327	1225	830
Grp Sat Flow(s),veh/h/ln	1721	1695	1758	1721	1695	1669	1721	1695	1676	1721	1695	1583
Q Serve(g_s), s	18.0	48.0	48.0	16.0	46.0	46.0	11.0	47.0	47.0	9.0	30.1	45.0
Cycle Q Clear(g_c), s	18.0	48.0	48.0	16.0	46.0	46.0	11.0	47.0	47.0	9.0	30.1	45.0
Prop In Lane	1.00		0.34	1.00		0.66	1.00		0.63	1.00		1.00
Lane Grp Cap(c), veh/h	442	1162	603	393	1114	548	270	1138	563	221	1635	713
V/C Ratio(X)	1.58	1.03	1.03	1.06	1.24	1.26	1.44	1.02	1.03	1.48	0.75	1.16
Avail Cap(c_a), veh/h	442	1162	603	393	1114	548	270	1138	563	221	1635	713
HCM Platoon Ratio	1.00	1.00	1.00	1.00	1.00	1.00	1.00	1.00	1.00	1.00	1.00	1.00
Upstream Filter(I)	1.00	1.00	1.00	1.00	1.00	1.00	1.00	1.00	1.00	1.00	1.00	1.00
Uniform Delay (d), s/veh	61.0	46.0	46.0	62.0	47.0	47.0	64.5	46.5	46.5	65.5	42.5	38.5
Incr Delay (d2), s/veh	270.5	34.7	45.9	62.2	115.6	132.3	217.2	33.1	45.5	237.8	3.2	89.1
Initial Q Delay(d3),s/veh	0.0	0.0	0.0	0.0	0.0	0.0	0.0	0.0	0.0	0.0	0.0	0.0
%ile BackOfQ(50%),veh/ln	25.2	28.0	31.0	11.0	39.4	41.3	13.4	27.2	28.8	11.6	14.5	45.1
LnGrp Delay(d),s/veh	331.5	80.7	91.9	124.2	162.6	179.3	281.7	79.6	92.0	303.3	45.7	127.6
LnGrp LOS	F	F	F	F	F	F	F	F	F	F	D	F
Approach Vol, veh/h		2520			2490			2134			2382	
Approach Delay, s/veh		152.9			160.8			119.8			109.6	
Approach LOS		F			F			F			F	

Timer	1	2	3	4	5	6	7	8
Assigned Phs	1	2	3	4	5	6	7	8
Phs Duration (G+Y+Rc), s	15.0	51.0	22.0	52.0	13.0	53.0	20.0	54.0
Change Period (Y+Rc), s	4.0	6.0	4.0	6.0	4.0	6.0	4.0	6.0
Max Green Setting (Gmax), s	11.0	45.0	18.0	46.0	9.0	47.0	16.0	48.0
Max Q Clear Time (g_c+I1), s	13.0	47.0	20.0	48.0	11.0	49.0	18.0	50.0
Green Ext Time (p_c), s	0.0	0.0	0.0	0.0	0.0	0.0	0.0	0.0

Intersection Summary	
HCM 2010 Ctrl Delay	136.7
HCM 2010 LOS	F

Movement	EBL	EBT	EBR	WBL	WBT	WBR	NBL	NBT	NBR	SBL	SBT	SBR
Lane Configurations												
Traffic Volume (veh/h)	249	1688	51	0	1812	276	219	89	9	107	35	221
Future Volume (veh/h)	249	1688	51	0	1812	276	219	89	9	107	35	221
Number	1	6	16	5	2	12	7	4	14	3	8	18
Initial Q (Qb), veh	0	0	0	0	0	0	0	0	0	0	0	0
Ped-Bike Adj(A_pbT)	1.00		1.00	1.00		1.00	1.00		1.00	1.00		1.00
Parking Bus, Adj	1.00	1.00	1.00	1.00	1.00	1.00	1.00	1.00	1.00	1.00	1.00	1.00
Adj Sat Flow, veh/h/ln	1863	1863	1900	0	1863	1900	1863	1863	1863	1863	1863	1863
Adj Flow Rate, veh/h	277	1876	57	0	1970	300	274	111	11	116	38	240
Adj No. of Lanes	1	3	0	0	3	0	1	1	1	1	1	1
Peak Hour Factor	0.90	0.90	0.90	0.92	0.92	0.92	0.80	0.80	0.80	0.92	0.92	0.92
Percent Heavy Veh, %	2	2	2	0	2	2	2	2	2	2	2	2
Cap, veh/h	296	3520	107	0	2368	355	291	269	229	204	197	373
Arrive On Green	0.13	0.69	0.69	0.00	0.53	0.53	0.09	0.14	0.14	0.06	0.11	0.11
Sat Flow, veh/h	1774	5072	154	0	4633	670	1774	1863	1583	1774	1863	1583
Grp Volume(v), veh/h	277	1253	680	0	1489	781	274	111	11	116	38	240
Grp Sat Flow(s),veh/h/ln	1774	1695	1836	0	1695	1745	1774	1863	1583	1774	1863	1583
Q Serve(g_s), s	21.2	32.3	32.4	0.0	66.2	68.6	15.0	9.8	1.1	0.5	3.4	18.1
Cycle Q Clear(g_c), s	21.2	32.3	32.4	0.0	66.2	68.6	15.0	9.8	1.1	0.5	3.4	18.1
Prop In Lane	1.00		0.08	0.00		0.38	1.00		1.00	1.00		1.00
Lane Grp Cap(c), veh/h	296	2353	1274	0	1798	925	291	269	229	204	197	373
V/C Ratio(X)	0.94	0.53	0.53	0.00	0.83	0.84	0.94	0.41	0.05	0.57	0.19	0.64
Avail Cap(c_a), veh/h	360	2353	1274	0	1798	925	310	269	229	223	197	373
HCM Platoon Ratio	1.00	1.00	1.00	1.00	1.00	1.00	1.00	1.00	1.00	1.00	1.00	1.00
Upstream Filter(I)	1.00	1.00	1.00	0.00	1.00	1.00	1.00	1.00	1.00	1.00	1.00	1.00
Uniform Delay (d), s/veh	59.9	13.4	13.4	0.0	35.4	35.9	75.1	70.1	66.3	77.6	73.5	35.5
Incr Delay (d2), s/veh	26.8	0.9	1.6	0.0	4.5	9.3	33.7	4.6	0.4	1.3	2.2	8.3
Initial Q Delay(d3),s/veh	0.0	0.0	0.0	0.0	0.0	0.0	0.0	0.0	0.0	0.0	0.0	0.0
%ile BackOfQ(50%),veh/ln	15.8	15.3	16.8	0.0	32.1	35.4	16.2	5.4	0.5	5.6	1.9	8.8
LnGrp Delay(d),s/veh	86.7	14.2	15.0	0.0	39.9	45.2	108.8	74.7	66.7	79.0	75.7	43.7
LnGrp LOS	F	B	B		D	D	F	E	E	E	E	D
Approach Vol, veh/h		2210			2270			396			394	
Approach Delay, s/veh		23.5			41.8			98.1			57.2	
Approach LOS		C			D			F			E	

Timer	1	2	3	4	5	6	7	8
Assigned Phs	1	2	3	4		6	7	8
Phs Duration (G+Y+Rc), s	39.4	101.5	16.1	33.0		130.9	23.1	26.0
Change Period (Y+Rc), s	6.0	6.0	6.0	7.0		6.0	6.0	7.0
Max Green Setting (Gmax), s	30.6	87.0	12.0	26.0		123.0	19.0	19.0
Max Q Clear Time (g_c+I2), s	23.2	70.6	2.5	11.8		34.4	17.0	20.1
Green Ext Time (p_c), s	0.2	6.3	0.1	0.4		5.6	0.1	0.0

Intersection Summary		
HCM 2010 Ctrl Delay		39.5
HCM 2010 LOS		D

Intersection	
Int Delay, s/veh	45.1

Movement	EBL	EBT	EBR	WBL	WBT	WBR	NBL	NBT	NBR	SBL	SBT	SBR
Lane Configurations												
Traffic Vol, veh/h	21	1537	246	77	1986	34	0	0	390	0	0	102
Future Vol, veh/h	21	1537	246	77	1986	34	0	0	390	0	0	102
Conflicting Peds, #/hr	0	0	0	0	0	0	0	0	0	0	0	0
Sign Control	Free	Free	Free	Free	Free	Free	Stop	Stop	Stop	Stop	Stop	Stop
RT Channelized	-	-	None	-	-	None	-	-	None	-	-	None
Storage Length	-	-	-	300	-	-	-	-	0	-	-	0
Veh in Median Storage, #	-	0	-	-	0	-	-	0	-	-	0	-
Grade, %	-	0	-	-	0	-	-	0	-	-	0	-
Peak Hour Factor	92	92	92	92	92	92	92	92	92	92	92	92
Heavy Vehicles, %	2	2	2	2	2	2	2	2	2	2	2	2
Mvmt Flow	23	1671	267	84	2159	37	0	0	424	0	0	111

Major/Minor	Major1			Major2			Minor1			Minor2		
Conflicting Flow All	2196	0	0	1938	0	0	-	-	969	-	-	1098
Stage 1	-	-	-	-	-	-	-	-	-	-	-	-
Stage 2	-	-	-	-	-	-	-	-	-	-	-	-
Critical Hdwy	5.34	-	-	5.34	-	-	-	-	7.14	-	-	7.14
Critical Hdwy Stg 1	-	-	-	-	-	-	-	-	-	-	-	-
Critical Hdwy Stg 2	-	-	-	-	-	-	-	-	-	-	-	-
Follow-up Hdwy	3.12	-	-	3.12	-	-	-	-	3.92	-	-	3.92
Pot Cap-1 Maneuver	99	-	-	134	-	-	0	0	~ 218	0	0	178
Stage 1	-	-	-	-	-	-	0	0	-	0	0	-
Stage 2	-	-	-	-	-	-	0	0	-	0	0	-
Platoon blocked, %		-	-		-	-						
Mov Cap-1 Maneuver	99	-	-	134	-	-	-	-	~ 218	-	-	178
Mov Cap-2 Maneuver	-	-	-	-	-	-	-	-	-	-	-	-
Stage 1	-	-	-	-	-	-	-	-	-	-	-	-
Stage 2	-	-	-	-	-	-	-	-	-	-	-	-

Approach	EB	WB	NB	SB
HCM Control Delay, s	0.6	2.5	$ 478.2	53.8
HCM LOS			F	F

Minor Lane/Major Mvmt	NBLn1	EBL	EBT	EBR	WBL	WBT	WBR	SBLn1
Capacity (veh/h)	218	99	-	-	134	-	-	178
HCM Lane V/C Ratio	1.945	0.231	-	-	0.625	-	-	0.623
HCM Control Delay (s)	$ 478.2	51.9	-	-	68.6	-	-	53.8
HCM Lane LOS	F	F	-	-	F	-	-	F
HCM 95th %tile Q(veh)	30.9	0.8	-	-	3.3	-	-	3.5

Notes			
~: Volume exceeds capacity	$: Delay exceeds 300s	+: Computation Not Defined	*: All major volume in platoon

Intersection	
Int Delay, s/veh	591.1

Movement	EBT	EBR	WBL	WBT	NBL	NBR
Lane Configurations						
Traffic Vol, veh/h	1793	134	91	1979	118	146
Future Vol, veh/h	1793	134	91	1979	118	146
Conflicting Peds, #/hr	0	0	0	0	0	0
Sign Control	Free	Free	Free	Free	Stop	Stop
RT Channelized	-	None	-	None	-	None
Storage Length	-	-	200	-	0	0
Veh in Median Storage, #	0	-	-	0	0	-
Grade, %	0	-	-	0	0	-
Peak Hour Factor	92	92	92	92	92	92
Heavy Vehicles, %	2	2	2	2	2	2
Mvmt Flow	1949	146	99	2151	128	159

Major/Minor	Major1		Major2		Minor1	
Conflicting Flow All	0	0	2095	0	3080	1048
Stage 1	-	-	-	-	2022	-
Stage 2	-	-	-	-	1058	-
Critical Hdwy	-	-	5.34	-	5.74	7.14
Critical Hdwy Stg 1	-	-	-	-	6.64	-
Critical Hdwy Stg 2	-	-	-	-	6.04	-
Follow-up Hdwy	-	-	3.12	-	3.82	3.92
Pot Cap-1 Maneuver	-	-	112	-	~ 24	193
Stage 1	-	-	-	-	~ 55	-
Stage 2	-	-	-	-	266	-
Platoon blocked, %	-	-		-		
Mov Cap-1 Maneuver	-	-	112	-	~ 3	193
Mov Cap-2 Maneuver	-	-	-	-	~ 3	-
Stage 1	-	-	-	-	~ 55	-
Stage 2	-	-	-	-	~ 31	-

Approach	EB	WB	NB
HCM Control Delay, s	0	5.6	$ 9496.1
HCM LOS			F

Minor Lane/Major Mvmt	NBLn1	NBLn2	EBT	EBR	WBL	WBT
Capacity (veh/h)	3	193	-	-	112	-
HCM Lane V/C Ratio	42.754	0.822	-	-	0.883	-
HCM Control Delay (s)	$ 21151.6	75.9	-	-	126.9	-
HCM Lane LOS	F	F	-	-	F	-
HCM 95th %tile Q(veh)	18.3	5.9	-	-	5.3	-

Notes			
~: Volume exceeds capacity	$: Delay exceeds 300s	+: Computation Not Defined	*: All major volume in platoon

Movement	EBL	EBT	EBR	WBL	WBT	WBR	NBL	NBT	NBR	SBL	SBT	SBR
Lane Configurations												
Traffic Volume (veh/h)	510	970	459	312	1004	655	698	1845	457	406	1370	368
Future Volume (veh/h)	510	970	459	312	1004	655	698	1845	457	406	1370	368
Number	3	8	18	7	4	14	1	6	16	5	2	12
Initial Q (Qb), veh	0	0	0	0	0	0	0	0	0	0	0	0
Ped-Bike Adj(A_pbT)	1.00		1.00	1.00		1.00	1.00		1.00	1.00		1.00
Parking Bus, Adj	1.00	1.00	1.00	1.00	1.00	1.00	1.00	1.00	1.00	1.00	1.00	1.00
Adj Sat Flow, veh/h/ln	1863	1863	1863	1863	1863	1863	1863	1863	1900	1863	1863	1863
Adj Flow Rate, veh/h	548	1043	494	363	1167	762	862	2278	564	419	1412	379
Adj No. of Lanes	2	3	1	2	3	1	2	3	0	2	3	1
Peak Hour Factor	0.93	0.93	0.93	0.86	0.86	0.86	0.81	0.81	0.81	0.97	0.97	0.97
Percent Heavy Veh, %	2	2	2	2	2	2	2	2	2	2	2	2
Cap, veh/h	396	1068	771	344	966	509	954	1944	449	452	1627	689
Arrive On Green	0.12	0.21	0.21	0.10	0.19	0.19	0.28	0.47	0.47	0.13	0.32	0.32
Sat Flow, veh/h	3442	5085	1583	3442	5085	1583	3442	4130	954	3442	5085	1583
Grp Volume(v), veh/h	548	1043	494	363	1167	762	862	1841	1001	419	1412	379
Grp Sat Flow(s),veh/h/ln	1721	1695	1583	1721	1695	1583	1721	1695	1694	1721	1695	1583
Q Serve(g_s), s	23.0	40.8	11.3	20.0	38.0	38.0	48.3	94.1	94.1	24.1	52.3	12.6
Cycle Q Clear(g_c), s	23.0	40.8	11.3	20.0	38.0	38.0	48.3	94.1	94.1	24.1	52.3	12.6
Prop In Lane	1.00		1.00	1.00		1.00	1.00		0.56	1.00		1.00
Lane Grp Cap(c), veh/h	396	1068	771	344	966	509	954	1596	798	452	1627	689
V/C Ratio(X)	1.38	0.98	0.64	1.05	1.21	1.50	0.90	1.15	1.26	0.93	0.87	0.55
Avail Cap(c_a), veh/h	396	1068	771	344	966	509	954	1596	798	482	1627	689
HCM Platoon Ratio	1.00	1.00	1.00	1.00	1.00	1.00	1.00	1.00	1.00	1.00	1.00	1.00
Upstream Filter(I)	1.00	1.00	1.00	1.00	1.00	1.00	1.00	1.00	1.00	1.00	1.00	1.00
Uniform Delay (d), s/veh	88.5	78.5	20.1	90.0	81.0	44.3	69.7	52.9	52.9	85.9	64.0	42.0
Incr Delay (d2), s/veh	188.1	21.9	1.6	63.6	103.3	233.9	11.5	76.7	125.1	22.6	6.5	3.1
Initial Q Delay(d3),s/veh	0.0	0.0	0.0	0.0	0.0	0.0	0.0	0.0	0.0	0.0	0.0	0.0
%ile BackOfQ(50%),veh/ln	21.3	21.3	14.2	12.6	27.0	59.8	24.5	61.1	71.8	12.9	25.4	14.8
LnGrp Delay(d),s/veh	276.6	100.5	21.7	153.6	184.3	278.2	81.2	129.6	178.0	108.5	70.6	45.1
LnGrp LOS	F	F	C	F	F	F	F	F	F	F	E	D
Approach Vol, veh/h		2085			2292			3704			2210	
Approach Delay, s/veh		128.1			210.7			131.4			73.4	
Approach LOS		F			F			F			E	

Timer	1	2	3	4	5	6	7	8
Assigned Phs	1	2	3	4	5	6	7	8
Phs Duration (G+Y+Rc), s	61.4	70.0	29.0	44.0	31.3	100.1	25.0	48.0
Change Period (Y+Rc), s	6.0	* 6	6.0	* 6	5.0	6.0	5.0	6.0
Max Green Setting (Gmax), s	53.0	* 64	23.0	* 38	28.0	89.0	20.0	41.0
Max Q Clear Time (g_c+I1), s	50.3	54.3	25.0	40.0	26.1	96.1	22.0	42.8
Green Ext Time (p_c), s	0.7	3.7	0.0	0.0	0.2	0.0	0.0	0.0

Intersection Summary	
HCM 2010 Ctrl Delay	135.9
HCM 2010 LOS	F

Notes

* HCM 2010 computational engine requires equal clearance times for the phases crossing the barrier.

APPENDIX F

ARTPLAN Output Sheets

Existing (2016)

ARTPLAN 2012 Conceptual Planning Analysis

Project Information

Analyst	RS&H	**Arterial Name**	Miami Gardens Drive	**Study Period**	**Standard K**
Date Prepared	8/29/2019 7:39:46 AM	**From**	I-75	**Modal Analysis**	Multimodal
Agency	FDOT D6	**To**	SR 823/NW 57th Ave	**Program**	ARTPLAN 2012
Area Type	Large Urbanized	**Peak Direction**	Eastbound	**Version Date**	12/12/2012
Arterial Class	1				

File Name	X:\p\43886412201_MGD_REEV\traffic\Operations Analysis\2016 Existing\ARTPLAN\2016_Existing_v2.xap
User Notes	Existing Conditions

Arterial Data

K	0.09	**PHF**	0.95	**Control Type**	CoordinatedActuated
D	0.543	**% Heavy Vehicles**	3.2	**Base Sat. Flow Rate**	1950

Automobile Intersection Data

Cross Street	Cycle Length	Thru g/C	Arr. Type	INT # Dir.Lanes	% Left Turns	% Right Turns	Left Turn Lanes	Left Turn Phasing	# Left Turn Lanes	LT Storage Length	Left g/C	Right Turn Lanes
NW 87th Ave	180	0.45	4	2	27	17	Yes	Protected	2	570	0.23	Yes
NW 82nd Ave	150	0.67	4	2	9	16	Yes	ProtPerm	1	250	0.19	No
NW 79th Ave	150	0.77	4	2	13	0	Yes	ProtPerm	1	150	0.17	No
Oakmont Dr	150	0.71	4	2	11	2	Yes	ProtPerm	1	170	0.18	No
NW 75th Pl	150	0.61	4	2	0	14	No	None	N/A	N/A	N/A	No
Bobolink Dr	150	0.7	4	2	7	0	Yes	ProtPerm	1	120	0.11	No
Ludlam Rd/NW 67th Av	140	0.34	4	2	26	10	Yes	Protected	2	240	0.17	No
NW 62nd Dr	180	0.74	4	2	14	3	Yes	ProtPerm	1	300	0.16	No
SR 823/NW 57th Ave	180	0.21	4	2	26	20	Yes	Protected	2	450	0.14	Yes

Automobile Segment Data

Segment #	Length	AADT	Hourly Vol.	SEG # Dir.Lanes	Posted Speed	Free Flow Speed	Median Type	On-Street Parking	Parking Activity
1 (to NW 87th Ave)	1026	45800	2238	2	40	45	Restrictive	No	N/A
2 (to NW 82nd Ave)	2620	34600	1691	2	40	45	Restrictive	No	N/A
3 (to NW 79th Ave)	1582	34000	1662	2	40	45	Restrictive	No	N/A
4 (to Oakmont Dr)	1820	36100	1764	2	40	45	Restrictive	No	N/A
5 (to NW 75th Pl)	546	38700	1891	2	40	45	Restrictive	No	N/A
6 (to Bobolink Dr)	4043	38700	1891	2	40	45	Restrictive	No	N/A
7 (to Ludlam Rd/NW 67th Av)	1079	37800	1847	2	40	45	Restrictive	No	N/A
8 (to NW 62nd Dr)	2527	41600	2033	2	40	45	Restrictive	No	N/A
9 (to SR 823/NW 57th Ave)	2021	36500	1784	2	40	45	Restrictive	No	N/A

Automobile LOS

Segment #	Thru Mvmt Flow Rate	Adj. Sat. Flow Rate	v/c	Control Delay	Int. Approach LOS	Queue Ratio	Speed (mph)	Segment LOS
1 (to NW 87th Ave)	1319	3151	0.930	37.24	D	0.74	13.02	F
2 (to NW 82nd Ave)	1620	3561	0.679	4.03	A	0.60	37.87	B
3 (to NW 79th Ave)	1522	3601	0.549	0.53	A	#	39.72	B
4 (to Oakmont Dr)	1653	3596	0.647	2.47	A	#	37.68	B
5 (to NW 75th Pl)	1991	3566	0.915	16.75	B	0.00	14.20	F
6 (to Bobolink Dr)	1851	3601	0.734	2.61	A	#	39.71	B
7 (to Ludlam Rd/NW 67th Av)	1439	3292	0.180	26.87	C	#	16.54	E
8 (to NW 62nd Dr)	1840	3594	0.692	1.84	A	0.50	41.01	A
9 (to SR 823/NW 57th Ave)	1014	2614	-1.222	41.08	D	#	18.70	D

Arterial Length	3.3720	Weighted g/C	0.42	FFS Delay	171.12	Threshold Delay	0.00	Auto Speed	28.05	Auto LOS	C

Automobile Service Volumes

Note: The maximum normally acceptable directional service volume for LOS E in Florida for this facility type and area type is 1000 veh/h/ln.

	A	B	C	D	E
Lanes	**Hourly Volume In Peak Direction**				
1	**	**	580	***	***
2	**	120	1120	***	***
3	**	210	1700	***	***
4	**	290	2260	***	***
*	**	120	1120	***	***
Lanes	**Hourly Volume In Both Directions**				
2	**	**	1070	***	***
4	**	230	2070	***	***
6	**	390	3120	***	***
8	**	540	4170	***	***
*	**	230	2070	***	***
Lanes	**Annual Average Daily Traffic**				
2	**	**	11900	***	***
4	**	2500	23000	***	***
6	**	4300	34700	***	***
8	**	6000	46300	***	***
*	**	2500	23000	***	***

Multimodal Segment Data

Segment #	Outside Lane Width	Pave Cond	Pave Shldr /Bike Lane	Side Path	Side Path Separation	Side walk	Sidewalk Roadway Separation	Sidewalk Roadway Protective Barrier	Bus Freq	Passenger Load Factor	Amenities	Bus Stop Type
1 (to NW 87th Ave)	Typical	Typical	No	No	N/A	No	N/A	No	0	0.42	Poor	None
2 (to NW 82nd Ave)	Typical	Typical	No	No	N/A	Yes	Wide	No	0	0.42	Poor	None
3 (to NW 79th Ave)	Typical	Typical	No	No	N/A	Yes	Wide	No	3	0.42	Excellent	Typical
4 (to Oakmont Dr)	Typical	Typical	No	No	N/A	Yes	Wide	No	3	0.42	Excellent	Typical
5 (to NW 75th Pl)	Typical	Typical	No	No	N/A	Yes	Wide	No	4	0.42	Fair	Typical
6 (to Bobolink Dr)	Typical	Typical	No	No	N/A	Yes	Wide	No	12	0.42	Excellent	Typical
7 (to Ludlam Rd/NW 67th Av)	Typical	Typical	No	No	N/A	Yes	Adjacent	No	7	0.42	Excellent	Typical
8 (to NW 62nd Dr)	Typical	Typical	No	No	N/A	Yes	Wide	No	5	0.42	Excellent	Typical
9 (to SR 823/NW 57th Ave)	Typical	Typical	No	No	N/A	Yes	Wide	No	5	0.42	Good	Typical

Pedestrian SubSegment Data

	% of Segment			Sidewalk			Separation			Barrier		
Segment #	**1**	**2**	**3**	**1**	**2**	**3**	**1**	**2**	**3**	**1**	**2**	**3**
1 (to NW 87th Ave)	100			No			N/A			No		
2 (to NW 82nd Ave)	100			Yes			Wide			No		
3 (to NW 79th Ave)	100			Yes			Wide			No		
4 (to Oakmont Dr)	100			Yes			Wide			No		
5 (to NW 75th Pl)	100			Yes			Wide			No		
6 (to Bobolink Dr)	100			Yes			Wide			No		
7 (to Ludlam Rd/NW 67th Av)	100			Yes			Adjacent			No		
8 (to NW 62nd Dr)	100			Yes			Wide			No		
9 (to SR 823/NW 57th Ave)	100			Yes			Wide			No		

Multimodal LOS

	Bicycle Street		Bicycle Sidepath		Pedestrian					Bus	
Link #	**Score**	**LOS**	**Score**	**LOS**	**1**	**2**	**3**	**Score**	**LOS**	**Adj. Buses**	**LOS**
1 (to NW 87th Ave)	4.92	E	N/A	N/A				6.24	F	0.00	F
2 (to NW 82nd Ave)	4.85	E	N/A	N/A				4.11	D	0.00	F
3 (to NW 79th Ave)	4.83	E	N/A	N/A				4.05	D	2.43	D
4 (to Oakmont Dr)	4.86	E	N/A	N/A				4.17	D	3.12	C
5 (to NW 75th Pl)	4.73	E	N/A	N/A				4.11	D	2.94	D
6 (to Bobolink Dr)	4.91	E	N/A	N/A				4.35	E	11.78	A
7 (to Ludlam Rd/NW 67th Av)	4.85	E	N/A	N/A				4.35	E	6.19	A
8 (to NW 62nd Dr)	4.54	E	N/A	N/A				3.16	C	5.46	B
9 (to SR 823/NW 57th Ave)	4.87	E	N/A	N/A				4.20	D	5.25	B

Bicycle LOS	4.82	E	Pedestrian LOS	4.28	E	Bus LOS	5.17	B

MultiModal Service Volume Tables

Bicycle

	A	B	C	D	E
Lanes	**Hourly Volume In Peak Direction**				
1	**	**	130	290	1000
2	**	**	260	600	2000
3	**	**	400	920	3000
4	**	**	530	1210	4000
*	**	**	260	600	2000
Lanes	**Hourly Volume In Both Directions**				
2	**	**	240	540	1850
4	**	**	480	1110	3690
6	**	**	730	1680	5530
8	**	**	970	2220	7370
*	**	**	480	1110	3690
Lanes	**Annual Average Daily Traffic**				
2	**	**	2700	5900	20500
4	**	**	5400	12300	41000
6	**	**	8100	18700	61400
8	**	**	10800	24700	81900
*	**	**	5400	12300	41000

Pedestrian

	A	B	C	D	E
Lanes	**Hourly Volume In Peak Direction**				
1	**	190	520	840	1000
2	**	380	1050	1710	2000
3	**	570	1570	2550	3000
4	**	760	2090	3410	4000
*	**	380	1050	1710	2000
Lanes	**Hourly Volume In Both Directions**				
2	**	350	960	1550	1850
4	**	700	1940	3150	3690
6	**	1050	2890	4690	5530
8	**	1400	3850	6280	7370
*	**	700	1940	3150	3690
Lanes	**Annual Average Daily Traffic**				
2	**	3900	10700	17200	20500
4	**	7800	21500	35000	41000
6	**	11700	32100	52100	61400
8	**	15600	42800	69800	81900
*	**	7800	21500	35000	41000

Bus

A	B	C	D	E
Buses Per Hour In Peak Direction				
>= 7	>= 5	>= 4	>= 3	>= 2
Buses in Study Hour in Peak Direction (Daily)				
>= 6.05	>= 4.04	>= 3.03	>= 2.02	>= 1.01

*** Service Volumes for the specific facility being analyzed, based on # of lanes from the intersection and segment data**

screens.
**** Cannot be achieved based on input data provided.**
***** Not applicable for that level of service letter grade. See generalized tables notes for more details.**
 # Under the given conditions, left turn lane storage is highly likely to overflow. The number of directional thru lanes should be reduced accordingly.
Facility weighted g/C exceeds normally acceptable upper range (0.5); verify that g/C inputs are correct.
Intersection capacity (ies) are exceeded for the full hour; an operational level analysis tool is more appropriate for this situation.

No Build 2040

ARTPLAN 2012 Conceptual Planning Analysis

Project Information

Analyst	RS&H	**Arterial Name**	Miami Gardens Drive	**Study Period**	**Standard K**
Date Prepared	7/12/2019 7:39:46 AM	**From**	I-75	**Modal Analysis**	Multimodal
Agency	FDOT D6	**To**	SR 823/NW 57th Ave	**Program**	ARTPLAN 2012
Area Type	Large Urbanized	**Peak Direction**	Eastbound	**Version Date**	12/12/2012
Arterial Class	1				

File Name	X:\p\43886412201_MGD_REEV\traffic\Operations Analysis\No Build\2040 No Build\ARTPLAN\2040_NoBuild_v2.xap
User Notes	No Build Concept

Arterial Data

K	0.09	**PHF**	0.95	**Control Type**	CoordinatedActuated
D	0.543	**% Heavy Vehicles**	3.2	**Base Sat. Flow Rate**	1950

Automobile Intersection Data

Cross Street	Cycle Length	Thru g/C	Arr. Type	INT # Dir.Lanes	% Left Turns	% Right Turns	Left Turn Lanes	Left Turn Phasing	# Left Turn Lanes	LT Storage Length	Left g/C	Right Turn Lanes
NW 87th Ave	180	0.45	4	2	27	17	Yes	Protected	2	570	0.23	Yes
NW 82nd Ave	150	0.67	4	2	9	16	Yes	ProtPerm	1	250	0.19	No
NW 79th Ave	150	0.77	4	2	13	0	Yes	ProtPerm	1	150	0.17	No
Oakmont Dr	180	0.71	4	2	11	2	Yes	ProtPerm	1	170	0.18	No
NW 75th Pl	150	0.61	4	2	0	14	No	None	N/A	N/A	N/A	No
Bobolink Dr	150	0.7	4	2	7	0	Yes	ProtPerm	1	120	0.11	No
Ludlam Rd/NW 67th Av	140	0.34	4	2	26	10	Yes	Protected	2	240	0.17	No
NW 62nd Dr	180	0.74	4	2	14	3	Yes	ProtPerm	1	300	0.16	No
SR 823/NW 57th Ave	200	0.21	4	2	26	20	Yes	Protected	2	450	0.14	Yes

Automobile Segment Data

Segment #	Length	AADT	Hourly Vol.	SEG # Dir.Lanes	Posted Speed	Free Flow Speed	Median Type	On-Street Parking	Parking Activity
1 (to NW 87th Ave)	1026	58000	2834	2	40	45	Restrictive	No	N/A
2 (to NW 82nd Ave)	2620	44000	2150	2	40	45	Restrictive	No	N/A
3 (to NW 79th Ave)	1582	46000	2248	2	40	45	Restrictive	No	N/A
4 (to Oakmont Dr)	1820	52000	2541	2	40	45	Restrictive	No	N/A
5 (to NW 75th Pl)	546	46000	2248	2	40	45	Restrictive	No	N/A
6 (to Bobolink Dr)	4043	50000	2444	2	40	45	Restrictive	No	N/A
7 (to Ludlam Rd/NW 67th Av)	1079	50000	2444	2	40	45	Restrictive	No	N/A
8 (to NW 62nd Dr)	2527	47000	2297	2	40	45	Restrictive	No	N/A
9 (to SR 823/NW 57th Ave)	2021	46000	2248	2	40	45	Restrictive	No	N/A

Automobile LOS

Segment #	Thru Mvmt Flow Rate	Adj. Sat. Flow Rate	v/c	Control Delay	Int. Approach LOS	Queue Ratio	Speed (mph)	Segment LOS
1 (to NW 87th Ave)	1671	3151	1.178	126.68	F	#	5.04	F
2 (to NW 82nd Ave)	2059	3561	0.863	5.23	A	0.77	36.20	B
3 (to NW 79th Ave)	2059	3601	0.742	0.72	A	#	38.36	B
4 (to Oakmont Dr)	2381	3596	0.932	7.79	A	#	31.53	B
5 (to NW 75th Pl)	2366	3566	1.088	62.39	E	0.00	5.52	F
6 (to Bobolink Dr)	2393	3601	0.949	4.60	A	#	37.56	B
7 (to Ludlam Rd/NW 67th Av)	1904	3298	0.206	26.97	C	#	16.30	E
8 (to NW 62nd Dr)	2079	3594	0.616	1.40	A	0.40	41.67	A
9 (to SR 823/NW 57th Ave)	1278	2568	-1.541	43.64	D	#	18.07	D

Arterial Length	3.3720	Weighted g/C	0.42	FFS Delay	323.55	Threshold Delay	0.00	Auto Speed	###	Auto LOS	###

Automobile Service Volumes

Note: The maximum normally acceptable directional service volume for LOS E in Florida for this facility type and area type is 1000 veh/h/ln.

	A	B	C	D	E
Lanes	**Hourly Volume In Peak Direction**				
1	**	**	580	***	***
2	**	**	1120	***	***
3	**	**	1700	***	***
4	**	**	2280	***	***
*	**	**	1120	***	***
Lanes	**Hourly Volume In Both Directions**				
2	**	**	1080	***	***
4	**	**	2080	***	***
6	**	**	3140	***	***
8	**	**	4190	***	***
*	**	**	2080	***	***
Lanes	**Annual Average Daily Traffic**				
2	**	**	12000	***	***
4	**	**	23100	***	***
6	**	**	34900	***	***
8	**	**	46600	***	***
*	**	**	23100	***	***

Multimodal Segment Data

Segment #	Outside Lane Width	Pave Cond	Pave Shldr /Bike Lane	Side Path	Side Path Separation	Side walk	Sidewalk Roadway Separation	Sidewalk Roadway Protective Barrier	Bus Freq	Passenger Load Factor	Amenities	Bus Stop Type
1 (to NW 87th Ave)	Typical	Typical	No	No	N/A	No	N/A	No	0	0.42	Poor	None
2 (to NW 82nd Ave)	Typical	Typical	No	No	N/A	Yes	Wide	No	0	0.42	Poor	None
3 (to NW 79th Ave)	Typical	Typical	No	No	N/A	Yes	Wide	No	3	0.42	Excellent	Typical
4 (to Oakmont Dr)	Typical	Typical	No	No	N/A	Yes	Wide	No	3	0.42	Excellent	Typical
5 (to NW 75th Pl)	Typical	Typical	No	No	N/A	Yes	Wide	No	4	0.42	Fair	Typical
6 (to Bobolink Dr)	Typical	Typical	No	No	N/A	Yes	Wide	No	12	0.42	Excellent	Typical
7 (to Ludlam Rd/NW 67th Av)	Typical	Typical	No	No	N/A	Yes	Adjacent	No	7	0.42	Excellent	Typical
8 (to NW 62nd Dr)	Typical	Typical	No	No	N/A	Yes	Wide	No	5	0.42	Excellent	Typical
9 (to SR 823/NW 57th Ave)	Typical	Typical	No	No	N/A	Yes	Wide	No	5	0.42	Good	Typical

Pedestrian SubSegment Data

	% of Segment			Sidewalk			Separation			Barrier		
Segment #	**1**	**2**	**3**	**1**	**2**	**3**	**1**	**2**	**3**	**1**	**2**	**3**
1 (to NW 87th Ave)	100			No			N/A			No		
2 (to NW 82nd Ave)	100			Yes			Wide			No		
3 (to NW 79th Ave)	100			Yes			Wide			No		
4 (to Oakmont Dr)	100			Yes			Wide			No		
5 (to NW 75th Pl)	100			Yes			Wide			No		
6 (to Bobolink Dr)	100			Yes			Wide			No		
7 (to Ludlam Rd/NW 67th Av)	100			Yes			Adjacent			No		
8 (to NW 62nd Dr)	100			Yes			Wide			No		
9 (to SR 823/NW 57th Ave)	100			Yes			Wide			No		

Multimodal LOS

	Bicycle Street		Bicycle Sidepath		Pedestrian					Bus	
Link #	**Score**	**LOS**	**Score**	**LOS**	**1**	**2**	**3**	**Score**	**LOS**	**Adj. Buses**	**LOS**
1 (to NW 87th Ave)	5.01	F	N/A	N/A				6.92	F	0.00	F
2 (to NW 82nd Ave)	4.96	E	N/A	N/A				4.63	E	0.00	F
3 (to NW 79th Ave)	4.96	E	N/A	N/A				4.71	E	2.06	D
4 (to Oakmont Dr)	5.01	F	N/A	N/A				5.05	F	1.72	E
5 (to NW 75th Pl)	4.80	E	N/A	N/A				4.53	E	3.57	C
6 (to Bobolink Dr)	5.02	F	N/A	N/A				4.97	E	11.78	A
7 (to Ludlam Rd/NW 67th Av)	4.96	E	N/A	N/A				5.03	F	4.00	B
8 (to NW 62nd Dr)	4.44	E	N/A	N/A				2.99	C	5.46	B
9 (to SR 823/NW 57th Ave)	4.88	E	N/A	N/A				4.25	E	4.46	B

Bicycle LOS	**4.90**	**E**	**Pedestrian LOS**	**4.80**	**E**	**Bus LOS**	**4.78**	**B**

MultiModal Service Volume Tables

Bicycle

	A	B	C	D	E
Lanes	**Hourly Volume In Peak Direction**				
1	**	**	130	290	1000
2	**	**	260	600	2000
3	**	**	400	920	3000
4	**	**	530	1210	4000
*	**	**	260	600	2000
Lanes	**Hourly Volume In Both Directions**				
2	**	**	240	540	1850
4	**	**	480	1110	3690
6	**	**	730	1680	5530
8	**	**	970	2220	7370
*	**	**	480	1110	3690
Lanes	**Annual Average Daily Traffic**				
2	**	**	2700	5900	20500
4	**	**	5400	12300	41000
6	**	**	8100	18700	61400
8	**	**	10800	24700	81900
*	**	**	5400	12300	41000

Pedestrian

	A	B	C	D	E
Lanes	**Hourly Volume In Peak Direction**				
1	**	190	520	840	1000
2	**	380	1050	1710	2000
3	**	570	1570	2550	3000
4	**	760	2090	3410	4000
*	**	380	1050	1710	2000
Lanes	**Hourly Volume In Both Directions**				
2	**	350	960	1550	1850
4	**	700	1940	3150	3690
6	**	1050	2890	4690	5530
8	**	1400	3850	6280	7370
*	**	700	1940	3150	3690
Lanes	**Annual Average Daily Traffic**				
2	**	3900	10700	17200	20500
4	**	7800	21500	35000	41000
6	**	11700	32100	52100	61400
8	**	15600	42800	69800	81900
*	**	7800	21500	35000	41000

Bus

A	B	C	D	E
Buses Per Hour In Peak Direction				
>= 7	>= 5	>= 4	>= 3	>= 2
Buses in Study Hour in Peak Direction (Daily)				
>= 6.63	>= 4.42	>= 3.32	>= 2.21	>= 1.11

*** Service Volumes for the specific facility being analyzed, based on # of lanes from the intersection and segment data**

screens.
**** Cannot be achieved based on input data provided.**
***** Not applicable for that level of service letter grade. See generalized tables notes for more details.**
 # Under the given conditions, left turn lane storage is highly likely to overflow. The number of directional thru lanes should be reduced accordingly.
Facility weighted g/C exceeds normally acceptable upper range (0.5); verify that g/C inputs are correct.
Intersection capacity (ies) are exceeded for the full hour; an operational level analysis tool is more appropriate for this situation.

Build 2040

ARTPLAN 2012 Conceptual Planning Analysis

Project Information

Analyst	RS&H	**Arterial Name**	Miami Gardens Drive	**Study Period**	**Standard K**
Date Prepared	7/12/2019 7:39:46 AM	**From**	I-75	**Modal Analysis**	Multimodal
Agency	FDOT D6	**To**	SR 823/NW 57th Ave	**Program**	ARTPLAN 2012
Area Type	Large Urbanized	**Peak Direction**	Eastbound	**Version Date**	12/12/2012
Arterial Class	1				

File Name	X:\p\43886412201_MGD_REEV\traffic\Operations Analysis\Build\2040 Build\ARTPLAN\2040_Build_v2.xap
User Notes	Build Concept

Arterial Data

K	0.09	**PHF**	0.95	**Control Type**	Pretimed
D	0.543	**% Heavy Vehicles**	3.2	**Base Sat. Flow Rate**	1950

Automobile Intersection Data

Cross Street	Cycle Length	Thru g/C	Arr. Type	INT # Dir.Lanes	% Left Turns	% Right Turns	Left Turn Lanes	Left Turn Phasing	# Left Turn Lanes	LT Storage Length	Left g/C	Right Turn Lanes
NW 87th Ave	180	0.56	4	3	23	18	Yes	Protected	2	570	0.23	Yes
NW 82nd Ave	150	0.63	4	3	8	13	Yes	ProtPerm	1	250	0.18	No
NW 79th Ave	150	0.79	4	3	14	0	Yes	ProtPerm	1	150	0.23	No
Oakmont Dr	180	0.67	4	3	14	2	Yes	ProtPerm	1	170	0.25	No
NW 75th Pl	150	0.6	4	3	0	12	No	None	N/A	N/A	N/A	No
Bobolink Dr	150	0.7	4	3	6	0	Yes	ProtPerm	1	120	0.13	No
Ludlam Rd/NW 67th Av	140	0.36	4	3	28	8	Yes	Protected	2	240	0.14	No
NW 62nd Dr	180	0.72	4	3	13	3	Yes	ProtPerm	1	300	0.20	No
SR 823/NW 57th Ave	200	0.24	4	3	26	23	Yes	Protected	2	450	0.13	Yes

Automobile Segment Data

Segment #	Length	AADT	Hourly Vol.	SEG # Dir.Lanes	Posted Speed	Free Flow Speed	Median Type	On-Street Parking	Parking Activity
1 (to NW 87th Ave)	1026	64000	3128	3	40	45	Restrictive	No	N/A
2 (to NW 82nd Ave)	2620	54000	2639	3	40	45	Restrictive	No	N/A
3 (to NW 79th Ave)	1582	52000	2541	3	40	45	Restrictive	No	N/A
4 (to Oakmont Dr)	1820	60000	2932	3	40	45	Restrictive	No	N/A
5 (to NW 75th Pl)	546	54000	2639	3	40	45	Restrictive	No	N/A
6 (to Bobolink Dr)	4043	54000	2639	3	40	45	Restrictive	No	N/A
7 (to Ludlam Rd/NW 67th Av)	1079	58000	2834	3	40	45	Restrictive	No	N/A
8 (to NW 62nd Dr)	2527	56000	2737	3	40	45	Restrictive	No	N/A
9 (to SR 823/NW 57th Ave)	2021	52000	2541	3	40	45	Restrictive	No	N/A

Automobile LOS

Segment #	Thru Mvmt Flow Rate	Adj. Sat. Flow Rate	v/c	Control Delay	Int. Approach LOS	Queue Ratio	Speed (mph)	Segment LOS
1 (to NW 87th Ave)	1943	4688	0.740	16.54	B	#	20.62	D
2 (to NW 82nd Ave)	2556	5379	0.754	7.90	A	0.92	35.13	B
3 (to NW 79th Ave)	2300	5428	0.536	0.28	A	#	40.23	A
4 (to Oakmont Dr)	2654	5421	0.731	5.73	A	#	34.29	B
5 (to NW 75th Pl)	2778	5383	0.860	12.99	B	0.00	16.34	E
6 (to Bobolink Dr)	2611	5428	0.687	2.36	A	#	40.32	A
7 (to Ludlam Rd/NW 67th Av)	2148	5102	0.522	28.76	C	#	15.93	E
8 (to NW 62nd Dr)	2507	5417	0.643	1.88	A	0.90	40.75	A
9 (to SR 823/NW 57th Ave)	1364	3819	-0.531	46.16	D	#	17.60	E

Arterial Length	3.3720	Weighted g/C	0.43	FFS Delay	158.87	Threshold Delay	0.00	Auto Speed	28.87	Auto LOS	C

Automobile Service Volumes

Note: The maximum normally acceptable directional service volume for LOS E in Florida for this facility type and area type is 1000 veh/h/ln.

	A	B	C	D	E
Lanes	**Hourly Volume In Peak Direction**				
1	**	120	680	***	***
2	**	300	1300	***	***
3	**	490	1960	***	***
4	**	680	2620	***	***
*	**	490	1960	***	***
Lanes	**Hourly Volume In Both Directions**				
2	**	230	1250	***	***
4	**	560	2400	***	***
6	**	910	3620	***	***
8	**	1260	4840	***	***
*	**	910	3620	***	***
Lanes	**Annual Average Daily Traffic**				
2	**	2500	13800	***	***
4	**	6200	26700	***	***
6	**	10100	40200	***	***
8	**	14000	53700	***	***
*	**	10100	40200	***	***

Multimodal Segment Data

Segment #	Outside Lane Width	Pave Cond	Pave Shldr /Bike Lane	Side Path	Side Path Separation	Side walk	Sidewalk Roadway Separation	Sidewalk Roadway Protective Barrier	Bus Freq	Passenger Load Factor	Amenities	Bus Stop Type
1 (to NW 87th Ave)	Typical	Desirable	Yes	No	N/A	Yes	Adjacent	No	0	0.42	Poor	None
2 (to NW 82nd Ave)	Typical	Desirable	Yes	No	N/A	Yes	Adjacent	No	0	0.42	Poor	None
3 (to NW 79th Ave)	Typical	Desirable	Yes	No	N/A	Yes	Adjacent	No	3	0.42	Excellent	Typical
4 (to Oakmont Dr)	Typical	Desirable	Yes	No	N/A	Yes	Adjacent	No	3	0.42	Excellent	Typical
5 (to NW 75th Pl)	Typical	Desirable	Yes	No	N/A	Yes	Adjacent	No	4	0.42	Excellent	Typical
6 (to Bobolink Dr)	Typical	Desirable	Yes	No	N/A	Yes	Adjacent	No	12	0.42	Excellent	Typical
7 (to Ludlam Rd/NW 67th Av)	Typical	Desirable	Yes	No	N/A	Yes	Adjacent	No	7	0.42	Excellent	Typical
8 (to NW 62nd Dr)	Typical	Desirable	Yes	No	N/A	Yes	Adjacent	No	5	0.42	Excellent	Typical
9 (to SR 823/NW 57th Ave)	Typical	Desirable	Yes	No	N/A	Yes	Adjacent	No	5	0.42	Excellent	Typical

Pedestrian SubSegment Data

	% of Segment			Sidewalk			Separation			Barrier		
Segment #	**1**	**2**	**3**	**1**	**2**	**3**	**1**	**2**	**3**	**1**	**2**	**3**
1 (to NW 87th Ave)	100			Yes			Adjacent			No		
2 (to NW 82nd Ave)	100			Yes			Adjacent			No		
3 (to NW 79th Ave)	100			Yes			Adjacent			No		
4 (to Oakmont Dr)	100			Yes			Adjacent			No		
5 (to NW 75th Pl)	100			Yes			Adjacent			No		
6 (to Bobolink Dr)	100			Yes			Adjacent			No		
7 (to Ludlam Rd/NW 67th Av)	100			Yes			Adjacent			No		
8 (to NW 62nd Dr)	100			Yes			Adjacent			No		
9 (to SR 823/NW 57th Ave)	100			Yes			Adjacent			No		

Multimodal LOS

	Bicycle Street		Bicycle Sidepath		Pedestrian					Bus	
Link #	**Score**	**LOS**	**Score**	**LOS**	**1**	**2**	**3**	**Score**	**LOS**	**Adj. Buses**	**LOS**
1 (to NW 87th Ave)	2.97	C	N/A	N/A				4.41	E	0.00	F
2 (to NW 82nd Ave)	2.95	C	N/A	N/A				4.12	D	0.00	F
3 (to NW 79th Ave)	2.91	C	N/A	N/A				4.02	D	2.43	D
4 (to Oakmont Dr)	2.98	C	N/A	N/A				4.32	E	2.65	D
5 (to NW 75th Pl)	2.77	C	N/A	N/A				3.89	D	3.23	C
6 (to Bobolink Dr)	2.95	C	N/A	N/A				4.13	D	13.86	A
7 (to Ludlam Rd/NW 67th Av)	2.93	C	N/A	N/A				4.19	D	7.28	A
8 (to NW 62nd Dr)	2.72	B	N/A	N/A				3.34	C	5.46	B
9 (to SR 823/NW 57th Ave)	2.92	C	N/A	N/A				4.04	D	5.78	B

Bicycle LOS	2.91	C	Pedestrian LOS	4.05	D	Bus LOS	5.74	B

MultiModal Service Volume Tables

Bicycle

	A	B	C	D	E
Lanes	**Hourly Volume In Peak Direction**				
1	220	600	1000	> 1000	***
2	440	1190	2000	> 2000	***
3	670	1770	3000	> 3000	***
4	890	2360	4000	> 4000	***
*	670	1770	3000	> 3000	***
Lanes	**Hourly Volume In Both Directions**				
2	410	1100	1850	> 1850	***
4	820	2190	3690	> 3690	***
6	1230	3260	5530	> 5530	***
8	1630	4340	7370	> 7370	***
*	1230	3260	5530	> 5530	***
Lanes	**Annual Average Daily Traffic**				
2	4600	12200	20500	> 20500	***
4	9100	24300	41000	> 41000	***
6	13600	36200	61400	> 61400	***
8	18100	48300	81900	> 81900	***
*	13600	36200	61400	> 61400	***

Pedestrian

	A	B	C	D	E
Lanes	**Hourly Volume In Peak Direction**				
1	**	290	620	940	1000
2	**	580	1240	1900	2000
3	**	870	1850	2830	3000
4	**	1160	2470	3770	4000
*	**	870	1850	2830	3000
Lanes	**Hourly Volume In Both Directions**				
2	**	540	1140	1730	1850
4	**	1070	2280	3500	3690
6	**	1600	3410	5210	5530
8	**	2130	4540	6940	7370
*	**	1600	3410	5210	5530
Lanes	**Annual Average Daily Traffic**				
2	**	5900	12700	19200	20500
4	**	11800	25300	38800	41000
6	**	17700	37900	57900	61400
8	**	23600	50500	77100	81900
*	**	17700	37900	57900	61400

Bus

A	B	C	D	E
Buses Per Hour In Peak Direction				
>= 6	>= 4	>= 3	>= 2	>= 1
Buses in Study Hour in Peak Direction (Daily)				
>= 5.43	>= 3.62	>= 2.72	>= 1.81	>= 0.91

*** Service Volumes for the specific facility being analyzed, based on # of lanes from the intersection and segment data**

screens.
**** Cannot be achieved based on input data provided.**
***** Not applicable for that level of service letter grade. See generalized tables notes for more details.**
 # Under the given conditions, left turn lane storage is highly likely to overflow. The number of directional thru lanes should be reduced accordingly.
Facility weighted g/C exceeds normally acceptable upper range (0.5); verify that g/C inputs are correct.
Intersection capacity (ies) are exceeded for the full hour; an operational level analysis tool is more appropriate for this situation.

Supporting Procedures

Bus Frequency Calculation

Segment	Route**	Headway (min)	Freqency*	Total Frequency
West of NW 87th Ave	-	-	-	-
NW 87th Ave - NW 82nd Ave	-	-	-	-
NW 82nd Ave - NW 79th Ave	267	20	3	3
NW 79th Ave - W Oakmont Dr	267	20	3	3
W Oakmont Dr - NW 75th Pl	267	20	3	4
	286	45	1.3	
NW 75th Pl - Bob-O-Link Dr	267	20	3	12
	183	15	4	
	73	30	2	
	99	40	1.5	
	286	45	1.3	
Bob-O-Link Dr - Ludlam Rd	286	45	1.3	7
	99	40	1.5	
	183	15	4	
Ludlam Rd - NW 62nd Ave	286	45	1.3	5
	183	15	4	
NW 62nd Ave - Red Rd	286	45	1.3	5
	183	15	4	

*__Frequency (bus/hr)__: The number of scheduled fixed route buses which have a potential to stop on a given roadway segment in one direction of flow in a one-hour time period. Description per *FDOT 2013 Quality/ Level of Service Handbook.*

** **Route**: Route data obtained per *miamidade.gov* (Metrobus Routes & Schedules)

Passenger Load Factor Calculation

Route 54		
Total Buses*		
Eastbound	39	Buses
Westbound	41	Buses
Total	80	Buses
Spaces Available		
Spaces Available per Bus	59	Spaces
Total Available Spaces	4720	Spaces
Average Weeday Ridership		
Per Miami-Dade County Ridership Technical Report October 2016	3171	Riders
Passenger Load Factor**		
Avg Weekday Riders/ Total Available Spaces	0.67	Passenger load factor

Route 73		
Total Buses*		
Northbound	28	Buses
Southbound	27	Buses
Total	55	Buses
Spaces Available		
Spaces Available per Bus	59	Spaces
Total Available Spaces	3245	Spaces
Average Weeday Ridership		
Per Miami-Dade County Ridership Technical Report October 2016	2223	Riders
Passenger Load Factor**		
Avg Weekday Riders/ Total Available Spaces	0.69	Passenger load factor

Route 95		
Total Buses*		
Northbound	63	Buses
Southbound	54	Buses
Total	117	Buses
Spaces Available		
Spaces Available per Bus	59	Spaces
Total Available Spaces	6903	Spaces
Average Weeday Ridership		
Per Miami-Dade County Ridership Technical Report October 2016	1957	Riders
Passenger Load Factor**		
Avg Weekday Riders/ Total Available Spaces	0.28	Passenger load factor

Route 99		
Total Buses*		
Eastbound	30	Buses
Westbound	32	Buses
Total	62	Buses
Spaces Available		
Spaces Available per Bus	59	Spaces
Total Available Spaces	3658	Spaces
Average Weeday Ridership		
Per Miami-Dade County Ridership Technical Report October 2016	1908	Riders
Passenger Load Factor**		
Avg Weekday Riders/ Total Available Spaces	0.52	Passenger load factor

Route 183		
Total Buses*		
Eastbound	57	Buses
Westbound	59	Buses
Total	116	Buses
Spaces Available		
Spaces Available per Bus	59	Spaces
Total Available Spaces	6844	Spaces
Average Weeday Ridership		
Per Miami-Dade County Ridership Technical Report October 2016	3483	Riders
Passenger Load Factor**		
Avg Weekday Riders/ Total Available Spaces	0.51	Passenger load factor

Route 267		
Total Buses*		
Northbound	8	Buses
Southbound	7	Buses
Total	15	Buses
Spaces Available		
Spaces Available per Bus	59	Spaces
Total Available Spaces	885	Spaces
Average Weeday Ridership		
Per Miami-Dade County Ridership Technical Report October 2016	102	Riders
Passenger Load Factor**		
Avg Weekday Riders/ Total Available Spaces	0.12	Passenger load factor

Route 286		
Total Buses*		
Loop	11	Buses
Total	11	Buses
Spaces Available		
Spaces Available per Bus	59	Spaces
Total Available Spaces	649	Spaces
Average Weeday Ridership		
Per Miami-Dade County Ridership Technical Report October 2016	121	Riders
Passenger Load Factor**		
Avg Weekday Riders/ Total Available Spaces	0.19	Passenger load factor

Average Passenger Load Factor	**0.42**

*__Buses__: Bus data determined per *miamidade.gov (* Metrobus Routes & Schedules*)*

**__Passenger Load Factor__: Used to determine the adjusted bus frequency value by applying a factor commensurate to the level of passenger crowding. Description per *FDOT 2013 Quality/ Level of Service Handbook.*

Amenities Assessment

Segment	Stop Location	Direction	Shelter	Bench	Rating*	Avg Rating
West of NW 87th Ave	-	-	-	-	**1**	1
NW 87th Ave - NW 82nd Ave	NW 186 St NW 82 Ave (West)	WB	Yes	Yes	4	3
	NW 186 St NW 87 Ave (West)		No	Yes	2	
	NW 186 St NW 87 Ave (East)		No	Yes	2	
NW 82nd Ave - NW 79th Ave	NW 186 St NW 82 Ave	EB	Yes	Yes	4	4
	NW 186 St NW 79 Ave		Yes	Yes	4	
	NW 186 St NW 79 Ave	WB	Yes	Yes	4	
	NW 186 St NW 82 Ave (East)		Yes	Yes	4	
NW 79th Ave - W Oakmont Dr	NW 186 St Wentworth Dr EB	EB	Yes	Yes	4	4
	NW 186 St Wentworth Dr WB	WB	Yes	Yes	4	
W Oakmont Dr - NW 75th Pl	NW 186 St 75 Pl	EB	No	Yes	2	2
	NW 186 St 75 Pl	WB	No	Yes	2	
NW 75th Pl - Bob-O-Link Dr	NW 186 St 73 Ave	EB	Yes	Yes	4	4
	NW 186 St #6900		Yes	Yes	4	
	NW 186 St 68 Ave		Yes	Yes	4	
	NW 186 St Bob-O-Link		Yes	Yes	4	
	NW 186 St Bob-O-Link	WB	Yes	Yes	4	
	NW 186 St 68 Av		Yes	Yes	4	
	NW 186 St #6900		Yes	Yes	4	
	NW 186 St 73 Ave		Yes	Yes	4	
Bob-O-Link Dr - Ludlam Rd	NW 186 St 67 Av	EB	Yes	Yes	4	3
	NW 186 St 67 Av	WB	No	Yes	2	
Ludlam Rd - NW 62nd Ave	NW 186 St #6270	EB	Yes	Yes	4	4
	NW 186 St #6270	WB	Yes	Yes	4	
	NW 186 St 67 Av (East)		Yes	Yes	4	
NW 62nd Ave - Red Rd	NW 186 St 62 Ave	EB	Yes	Yes	4	4
	NW 186 St 57 Ave		No	Yes	2	
	NW 186 St 57 Ave	WB	Yes	Yes	4	
	NW 186 St 62 Ave		Yes	Yes	4	

**Rating: 1 - Poor (No Bench or shelter), 2 - Fair (Bench only), 3 - Good (Shelter only), 4 - Excellent (Shelter & Bench)*

Rating determined per field review

APPENDIX G

MGD Re-evaluation, Project Traffic Forecasting Memorandum (PTFM), July 2019

July, 2019

PROJECT TRAFFIC FORECAST MEMORANDUM

SR 860/ MIAMI GARDENS DRIVE FROM I-75 TO SR 823/ NW 57TH AVENUE PD&E STUDY (RE-EVALUATION)

FPID: 438864-1-22-01

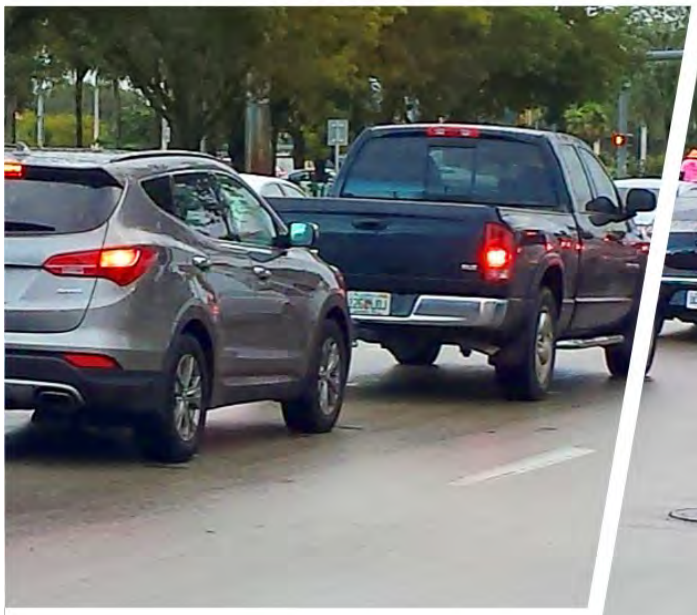

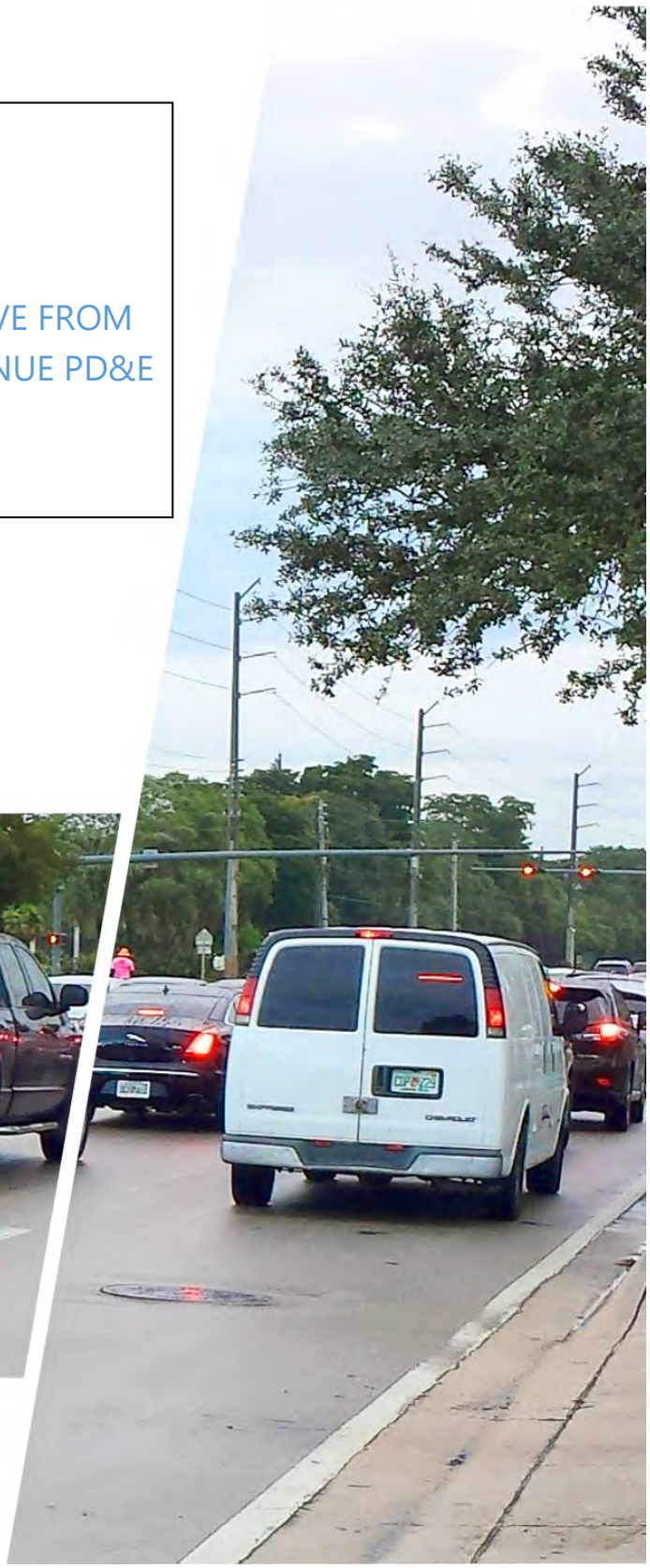

FDOT

Prepared for:

Florida Department of Transportation
District Six

Prepared by:

RS&H, Inc.

and

The Corradino Group

The environmental review, consultation, and other actions required by applicable federal environmental laws for this project are being or have been carried out by FDOT pursuant to 23 U.S.C. §327 and a Memorandum of Understanding dated December 14, 2016 and executed by FHWA and FDOT.

Table of Contents

List of Figures iv
List of Tables iv
1.0 Introduction 1
2.0 Project Location 2
3.0 Analysis Years 5
4.0 Traffic Data Collection 5
5.0 Travel Demand Forecast 5
Appendices 17
Appendix A - 2020 and 2040 AADT, DDHV and Turning Movement Forecasts
Appendix B – Bridge Technical Memorandum

List of Figures

Figure 1: Project Location Map 1
Figure 2: Miami Gardens Drive Study Area 2
Figure 3: TMC Locations and Count Stations 4
Figure 4:Design Traffic Forecasting Process Flowchart 11
Figure 5: Snapshot of AADT and DDHV Forecast at NW 87th Ave and Miami Garden Drive 12
Figure 6: Snapshot of Intersection Turns at 87th Ave and Miami Gardens Drive 15

List of Tables

Table 1: Regional Model Highway Evaluation Statistics 7
Table 2: Regional Model RMSE and Volume/Count by Volume Group 8
Table 3: Regional Model RMSE and Volume/Count by Facility Type 8
Table 4: Comparison of the Volumes and Forecasts 13
Table 5: Combined AADTs at the Segments of Miami Gardens Drive 14

1.0 Introduction

The Florida Department of Transportation (FDOT) is conducting a PD&E Study Reevaluation for the segment of SR 860/Miami Gardens Drive, extending from east of I-75 to SR 823/NW 57th Avenue in Miami-Dade County, Florida. The Re-evaluation follows from a planning level study that was completed by FDOT in April, 2018. Figure 1 shows the project study limits.

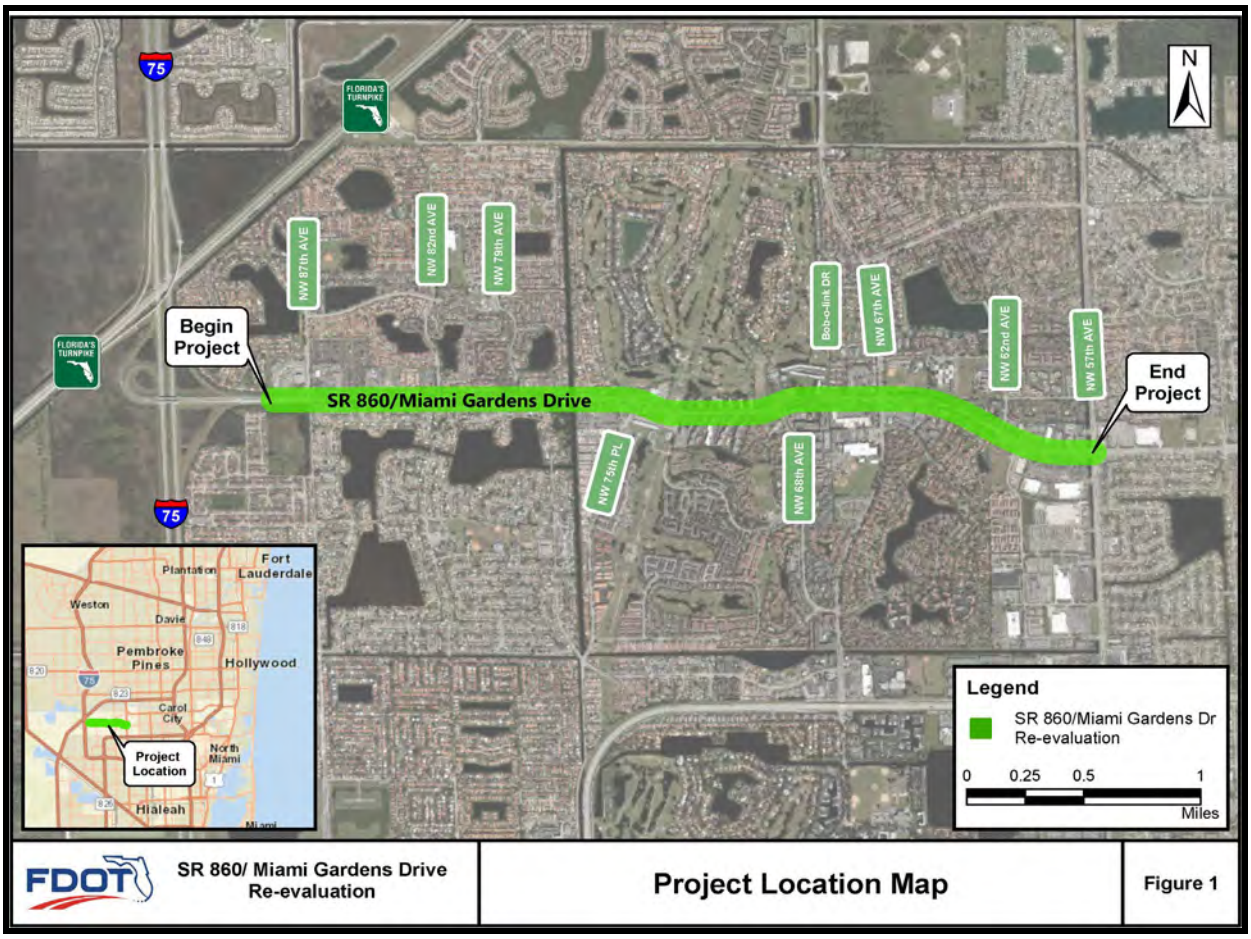

Figure 1: Project Location Map

It should be noted that the I-75 Interchange is not within the limits of this study. The future development and traffic condition of this interchange is being studied as part of an adjacent project.

This technical memorandum discusses the travel demand forecasting results of the PD&E Study Re-evaluation. The travel demand forecast was developed in accordance with the Traffic Methodology Memorandum, August 2018, prepared for the PD&E Study Re-evaluation. The travel demand model developed for Miami Gardens Drive (MGD) Planning Study was used in this study. A detailed model validation and forecasting process was documented during the planning study. It elaborates on the model future forecasting process of developing Annual Average Daily Traffic (AADT), Directional Design Hour Volume (DDHV) and turning movement forecasts for the design year (2040) and opening year (2020) No-Build and build conditions.

2.0 Project Location

The project corridor is geographically located near the northern end of Miami-Dade County line. The location of the corridor can be conveniently found as northwestern corner of inhabited Miami-Dade County area. The project corridor is a 3-mile subsection of an important state highway SR 860 that serves as a connection to I-75 and I-95 system. The area on either side of the corridor is substantially built out with residential developments, shopping centers and schools.

2.1 Study Area

A 2-mile buffer zone, originating from the corridor has been considered for the subarea model validation purposes. Figure 2 shows the study area boundary in the official SERPM model network. Note that this model subarea is larger than the area of influence of the corridor. This area was selected to capture the major origins and destinations of the corridor.

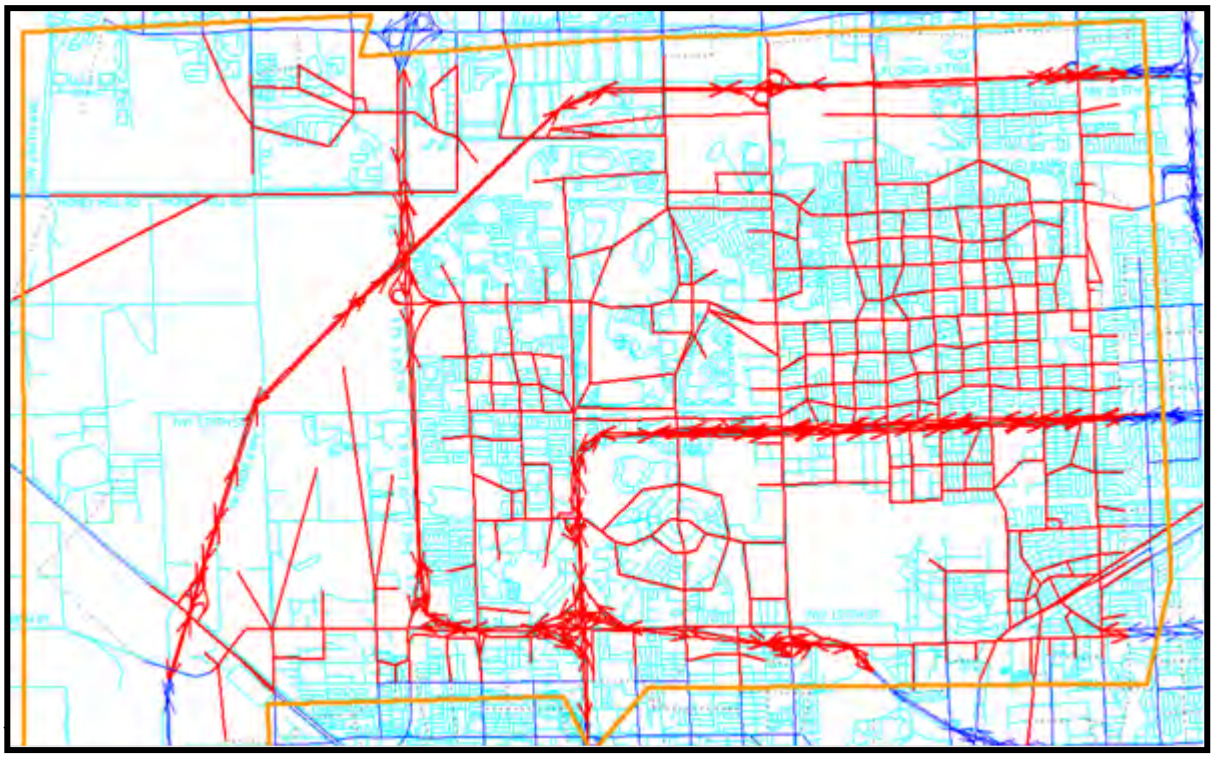

Figure 2: Miami Gardens Drive Study Area

2.2 Area of Influence

There are total of 17 intersections in the area of influence of the study corridor. The project team collected the count data at 26 locations and turning movements at 17 intersections during the month of May 2016. The data processing was documented under a separate document during the Planning Study (Technical Memorandum No.1). The following is the list of all the intersections. Figure 3 depicts both study intersections as well as the count stations.

1. NW 87th Avenue

2. Shopping Center Rear Entrance (East of NW 87th Avenue)

3. NW 84th Court

4. Mother of Our Redeemer Catholic School Entrance

5. NW 82nd Avenue

6. NW 79th Avenue

7. Wentworth Drive

8. Oakmont Drive

9. NW 75th Place

10. NW 73rd Avenue

11. NW 68th Avenue

12. Bob-O-Link Drive

13. Ludlam Road

14. NW 62nd Avenue

15. NW 59th Avenue

16. Shopping Center Entrance (Between NW 59th and NW 57th Avenue)

17. SR 823/NW 57th Avenue

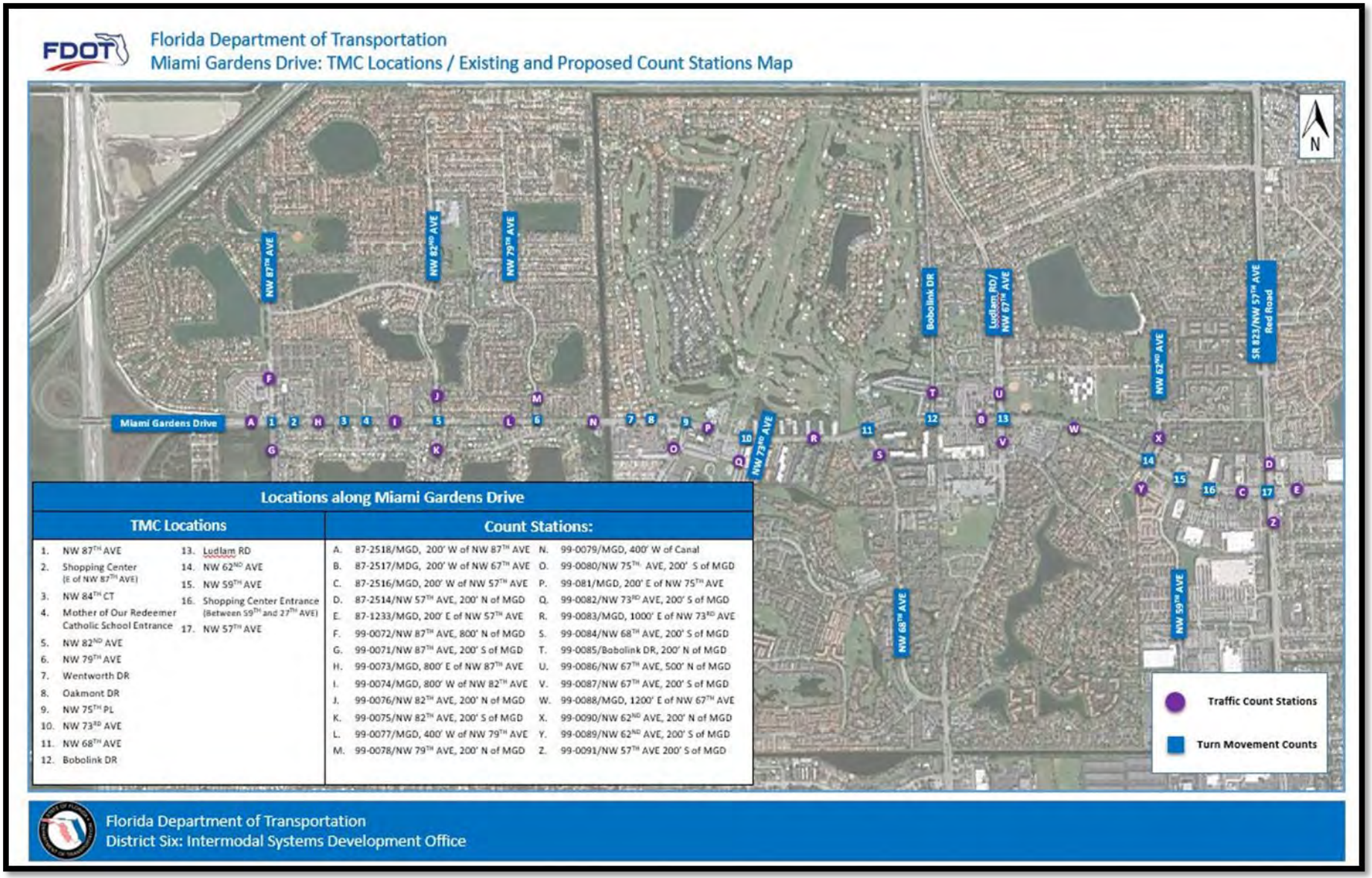

Figure 3: TMC Locations and Count Stations

3.0 Analysis Years

The following are the analysis years for this study:

- Existing Year: 2016
- Opening Year: 2020
- Design Year: 2040

4.0 Traffic Data Collection

This study utilized the traffic data that was previously collected in 2016 for the associated MGD Planning Study. Traffic data previously collected includes:

- Intersection turning movement counts (3 hours AM and 4 hours PM)
- 72-hour mechanical counts along various segments of the corridor
- Vehicle classification counts

4.1 Existing Year AADT, AM and PM Peak Hour Volumes

This study uses the existing year (2016) traffic volumes that were previously developed for the associated MGD Planning Study. It includes the estimated annual average daily traffic (AADT), AM peak hour volumes and PM peak hour volumes for year 2016.

5.0 Travel Demand Forecast

Design traffic forecast is a critical input for performing future year operations analysis and identifying the types of improvements needed. This section discusses the travel demand model forecasts development and refinements. AADT volumes, AM, and PM hourly volumes were developed for the design year 2040. The forecasts were developed for 2040 No-Build and 2040 Build scenario, as part of this effort.

Travel demand forecasts that were prepared for the prior MGD Planning Study were updated for the PD&E Study Reevaluation. The traffic forecast updates reflect the recent planned changes to the transportation network and land uses within the project study area.

The MGD Planning Study SERPM model was used for this study. This version is the most up-to-date version of SERPM7 model series, and will be referred to as SERPM7 hereinafter. SERPM7 model is the model used to develop the recent 2040 Long Range Transportation Plan (LRTP) for the Metropolitan Planning Organization (MPO). SERPM 7 model has a 2010 base year and 2040 horizon year. The 2040 horizon year scenario has the MPO approved 2040- Traffic Analysis Zones (TAZ) data and the 2040 cost

feasible network inputs. A sample size of 25% was chosen for the activity-based model run simulation. In general, for corridor studies, a 25% sample has been proven to be provide stable results. It is consistent with the model default settings. The model will run a maximum of 10 feedback runs, with the understanding that it might converge before reaching the maximum iterations settings.

5.1 Traffic Analysis Zones (TAZ) Data

During the MGD Planning Study, the TAZ demographic data for the year 2015 (used as 2016 conditions) was developed by interpolation using the 2010 and 2040 data from the SERPM model. A thorough review of the 2040 SERPM7 Cost Feasible model TAZ data, within the area of influence, was performed including checks for any negative growths. The American Dream Miami approved development intensities were used and compared against the 2040 MPO-forecasted TAZ data.

5.2 Highway Networks Development

The following model networks were developed as part of this PD&E Study:

- Design Year 2040 No-Build
- Design Year 2040 Build

The networks matched the corresponding analysis year network assumptions described below:

- **Design Year 2040 No-Build:** The 2040 No-Build network developed for the Planning Study was used as the starting point in this effort. This network was prepared by using the 2040 cost feasible regional LRTP network as the basis. I-75, HEFT, SR 924 and SR 826 future improvements, matching the latest approved designs were incorporated. A close review of this network was conducted within the area of influence of the study to reflect the 2040 conditions. One major project that can affect the forecasts of Miami Gardens Drive PD&E study is the opening of NW 170th Street East-West segment crossing I-75. This project was coded in the No-Build conditions. The proposed American Dream Miami (ADM) and Graham Properties development were incorporated in the No-Build alternative model.
- **Design Year 2040 Build:** The No-Build networks developed as part of this study were used as the baseline for the build alternative network development. The Build alternative includes a six-lane typical section along Miami Gardens Drive. The proposed American Dream Miami (ADM) and Graham Properties developments were incorporated in the Build alternative model.

5.3 Base Year SERPM Adjustments and Validation

This project utilized the year 2016 subarea validation performed as part of the Miami Gardens Drive Planning Study, the predecessor to this effort. A subarea was developed outlining an approximately 2–mile radius buffer around the corridor (see Figure 2). The subarea validation was focused on statistics

within this study area. Using the 2010 base year model network developed for the SERPM7 model validation, a 2016 existing year network was developed for performing the subarea model validation. The 2016 model input TAZ datasets were developed by interpolation. Model network attributes such as posted speeds, number of lanes, and facility types were verified closely against existing data sources within the area of influence. A full regional model run was performed and validation statistics within the subarea were verified. Through this effort, all major issues with network connections and model assignments were resolved. All modifications/adjustments to the SERPM network were documented in the planning study. Hence, no additional model validation was performed as part of this study.

Table 1 details the regional model system wide statistics for the year 2016, 2040 no-build and 2040 build alternative.

Table 1: Regional Model Highway Evaluation Statistics

Criteria	2016	2040 No-Build	2040 Build
Total Number of Directional Links:	32,568	34,561	34,561
Total Lane Miles:	15,638	17,080	17,086
Total Directional Miles:	8,337	8,792	8,792
Total Volume All Links:	439,364,162	548,856,774	549,143,144
Average (Directional) Volumes of All Links:	13,490.67	15,880.81	15,889.10
Total VMT All Links:	116,018,743	142,790,801	142,815,221
Total VHT All Links:	3,143,300	4,173,121	4,176,948

The regional Root-Mean-Square Error (RMSE) statistics of the regional model by volume group are presented in the Table 2. The model RMSE statistics were compared with the maximum allowable RMSE standards that the regional model development team developed. The comparison indicated that the regional model's performance in some volume groups is not within the maximum allowable ranges. Therefore, further subarea validation was required. Note that outside the Miami Gardens Drive Subarea, this summary uses 2010 counts instead of 2016 counts. Hence the regional volume/count ratio has higher volumes than counts, system wide.

Table 2: Regional Model RMSE and Volume/Count by Volume Group

Volume Group	Count Range	Model RMSE (%)	Allowable RMSE Range	Volume	Count	Volume/ Count	No of Links
1	1- 5,000	97.52%	45 - 55%	6,453,182	4,864,473	1.33	1,568
2	5,000-10,000	59.01%	35 - 45%	14,801,340	12,913,416	1.15	1,745
3	10,000-20,000	35.52%	27 - 35%	33,092,391	30,994,656	1.07	2,102
4	20,000-30,000	25.25%	24 - 27%	21,983,644	21,741,988	1.01	908
5	30,000-40,000	25.84%	22 - 24%	6,551,673	6,171,794	1.06	182
6	40,000-50,000	22.19%	20 - 22%	2,689,887	2,663,854	1.01	58
7	50,000-60,000	12.85%	18 - 20%	1,202,596	1,152,777	1.04	21
8	60,000-70,000	20.61%	17 - 18%	2,147,006	2,020,460	1.06	31
9	70,000-80,000	19.65%	16 - 17%	4,566,441	4,345,258	1.05	58
10	80,000-90,000	24.18%	15 - 16%	4,734,895	4,443,906	1.07	53
11	90,000-100,000	22.28%	14 - 15%	2,065,749	2,078,471	0.99	22
12	100,000-500,000	11.66%	< 14 %	4,697,524	4,564,754	1.03	42
ALL	**1-500,000**	38.94%	32 - 39%	104,986,328	97,955,807	1.07	6,790

The regional Root-Mean-Square Error (RMSE) statistics of the regional model by facility type are presented in Table 3.

Table 3: Regional Model RMSE and Volume/Count by Facility Type

Facility Group	Volume	Count	Volume /Count	RMSE	No of Links
Freeway (11-12)	19,205,044	18,126,887	1.06	20.36%	236
Uninterrupted Road (21)	1,482,611	1,197,313	1.24	56.62%	136
High Speed Arterial (41)	57,491,073	53,505,331	1.07	34.89%	3,778
Centroid connector (51-52)	9,078	10,600	0.86	20.31%	2
Low Speed Collector (61)	9,954,025	10,328,141	0.96	53.97%	1,676
Ramps (71+,93-94)	8,276,349	6,992,725	1.18	67.12%	690
HOV (81-82)	1,850,932	1,721,432	1.08	19.17%	82
Toll (91-92)	6,717,216	6,049,929	1.11	21.80%	185

ALL	**104,986,328**	**97,955,807**	**1.07**	**38.94%**	**6,790**

A CUBE Analyst trip table adjustment process was implemented using the 2016 subarea network developed for the study. The trip table adjustment process used the time-of-day traffic counts and the prior trip table from the travel demand model as inputs. The traffic assignment results from this procedure were closely validated to 2016 traffic counts. This 2016 adjusted trip table was used as the baseline for performing the future year forecasted trip tables in the PD&E study. The model volumes error margin was reduced significantly, by using this procedure. FDOT's FSUTMS-Cube Framework Phase II Model Calibration and Validation Standards were used as reference in the model validation. Percent root mean squared error (RMSE) and volume-to-count ratio statistics were used to evaluate the model validation. The RMSE target for a Time of Day, 2-mile radius subarea assignment is 25%. Volume-to-count ratio target is 5% deviation. These targets were used in the subarea model validation process.

The following method was used in performing the future year trip table adjustment process. The development of the 2040 trip tables' adjustment process is described below:

- Use the 2016 project validation scenario in SERPM7 model. Use the 2016 CUBE Analyst Trip Table as baseline (A).
- Use 2016 prior trip table and 2040 prior trip tables, and develop the difference in trip tables. This difference is called the growth (G) in the subarea.
- Develop the 2040 "Future Adjusted" Trip Tables (F) by adding A and G (F=A+G).
- Perform reasonableness checks on the adjusted trip tables, and make any post-processing adjustments (as needed). Since the base year is validated very closely to the traffic counts, in many cases, post-processing for future years is not necessary. Any future unreasonable model volumes were adjusted manually by post processing.

The trip table adjustment process was automated using CUBE Voyager software in the Planning Study, at the subarea level. Subsequently, AADT, DDHV and turning movements at the 17 intersections were extracted from the model and post-processed.

5.4 AADT and DDHV Volumes Development

The following table shows the representation of time periods in the SERPM7 model. Trip table refinements were performed for all the five different time periods independently, during the Planning Study. The 24-hour AADT volumes were developed by summing the assignment volumes from individual time periods.

Number	Description	Begin Time	End Time
1	Early	3:00 AM	5:59 AM
2	AM Peak	6:00 AM	8:59 AM
3	Midday	9:00 AM	3:00 PM
4	PM Peak	3:00 PM	6:59 PM
5	Evening	7:00 PM	2:59 AM

Because the subarea model was validated rigorously at the time of day level, the AM and PM time period volumes produced by the subarea model were used in developing the design traffic. The DDHV volumes development process for the study does not involve the application of the standard procedure of multiplying the AADT volumes with the K30 and D30 traffic factors. The forecasting methodology in this study involves using the time-of-day features of the travel demand model. The SERPM model is a time-of-day model that reports 3-hour AM peak volumes, 4-hour PM peak volumes and 17-hour off-peak volumes. The DDHV volumes were developed from the peak period volumes of the travel demand model. The DDHV volumes development involved the use of diurnal factors applied to the model estimated peak periods (AM and PM) volumes. The diurnal factors, in this case, are defined as the ratio of the peak hour volume to the peak period volume.

The AM and PM period-specific diurnal factors were developed from the existing traffic data collected as part of the Planning Study. The traffic data collected at 15-minute increments at all locations in the study's area of influence was analyzed for both AM and PM conditions. Since the intersection congestion is expected to occur in the AM or PM conditions, the design hour forecasts were performed for a typical AM period, and a PM period. As part of the design traffic forecasting process, AADT volumes were developed by combining AM, PM and off-peak period volumes.

The following step-by-step procedure was implemented in developing the diurnal factors:

- Traffic counts were tabulated and organized in a spreadsheet table in 15-minute increments.
- An hourly directional volume was computed for each 15-minute increment by computing the summation of the four consecutive intervals.
- The highest hourly volume was highlighted.
- The diurnal factor was computed as the highest hourly volume divided by the peak period volume.
- The data and the factors were examined throughout the study area corridors for logical similarities.

The DDHV volumes in the peak and non-peak directions were estimated by using the following formula:

DDHV = peak period volume x diurnal factor

A detailed diurnal factor development is documented in the Planning Study Design Traffic Memorandum. The AM diurnal factor was determined to be 0.4. The PM diurnal factor was determined to be 0.29.

Note that there are no directional factors involved in this method of DDHV volumes estimation. This means that the model's directional peak period volumes were used to develop the future year DDHV volumes. The AM and PM DDHV volumes were balanced along the entire corridor. For the intersection turning movement volumes development, the future turns were determined by using the SERPM subarea assignment. The manual post-processing includes adjustment to the problematic turns.

The AADT volumes developed for the corridor were verified for reasonableness. Independent data sources, such as traffic count trends, and compound growth rates using the region's population and employment were used to verify the future year projections.

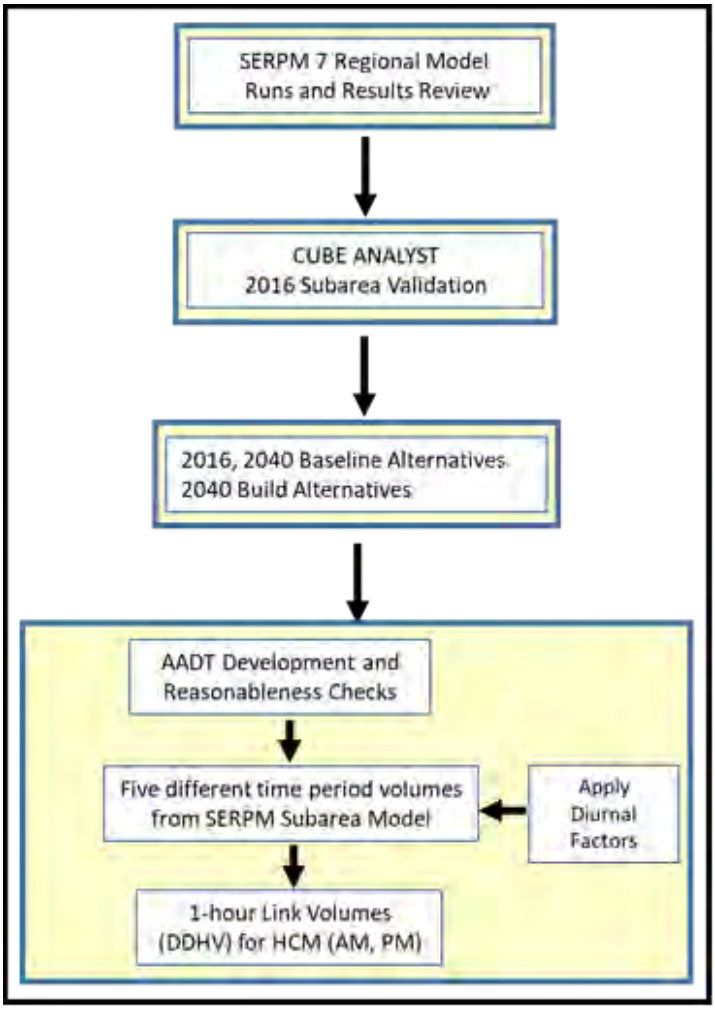

Figure 4:Design Traffic Forecasting Process Flowchart

The 24-hour AADT volumes were developed by summing the assignment volumes from individual time periods. The average Compound Annual Growth Rate (CAGR) for the corridor mainline volumes was around 1.12%. Along with this document, a companion spreadsheet that details the AADT, DDHV and turns movements of every link and intersection of the study area is electronically submitted. Figure 5 is a snapshot of an intersection shown with the help of boxes, from the companion electronic submittal. Each box corresponds to the directional movement of the road links.

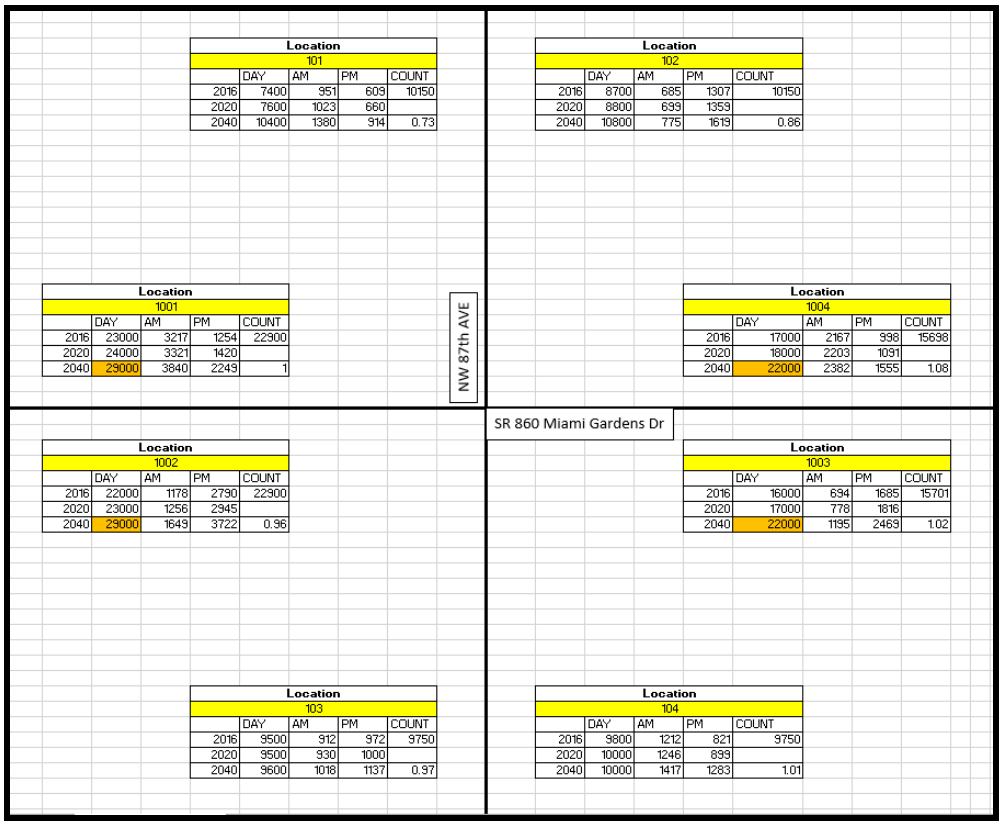

Figure 5: Snapshot of AADT and DDHV Forecast at NW 87th Ave and Miami Garden Drive

These boxes show Forecast Location Number and four columns (DAY, AM, PM and COUNT):

1. DAY: The model/forecasted AADT volume in 2016, 2020 and 2040 year
2. AM/PM: Peak hour counts (AM/PM) in the corresponding 2016 row, and forecasted DDHVs in 2020/2040 rows.
3. COUNT: This last column of each individual box also contains daily 2016 count and few links' volumes were post-processed by applying volume to count ratio.

In few locations, where the model growth rate showed negative growth or unreasonable growth, a manual post-processing effort was conducted. This was conducted using an average compound annual growth rate of 0.68%. These locations are highlighted with orange color. The user can refer to **Appendix B** that presents the AADT and DDHV projections.

5.5 Reasonableness Checks

The AADT volumes developed for the corridor were verified for reasonableness. Independent data sources, such as traffic count trends, and compound growth rates, based on population/employment data of the TAZs were used.

Historic trend line forecasts — The historic trend line projections were developed using Miami Gardens Drive historic AADT data from the 2015 FTI. These projections were compared against the Miami Gardens Drive 2040 No-Build scenario projections (see Table 4). Highlighted boxes show differences greater than 15%. Due to uncertainty in traffic count data and errors associated with trend line forecasting, these differences were considered acceptable.

Compound growth factors- The project team verified compound population and employment growth rates for all the TAZs falling under the 2-mile study subarea. The average population compound growth rate is 0.67% and the employment growth rate is 1.23%. A weighted average compound growth rate of 0.83% is computed and applied to the 2016 traffic counts to obtain 2040 growth-based projections. Table 4 shows comparison of forecasted volumes between 2040 no-build, 2040 CAGR and 2040 trendline.

Table 4: Comparison of the Volumes and Forecasts

Location	Station	2016 Count	2016 Volume	2040 Forecast	Growth Rate (%)	2040 CAGR Volume	% Diff (CAGR V/S Forecast)	2040 Trendline Volume	% Diff (Trendline V/S Forecast)
West of 87th Avenue	EB	22,900	22,207	29,000	1.12%	28,000	3.57	31,517	-7.99
East of 87th Avenue	EB	15,701	15,680	22,000	1.42%	19,000	15.79	NA	NA
West of 79th Avenue	EB	17,000	15,286	23,000	1.72%	21,000	9.52	NA	NA
East of79th Avenue	EB	18,050	17,306	26,000	1.71%	22,000	18.18	NA	NA
West of 75th Avenue	EB	18,900	15,561	23,000	1.64%	23,000	0.00	30,369	-24.26
East of 75th Avenue	EB	19,350	17,055	24,000	1.43%	24,000	0.00	NA	NA
West of 67th Avenue	EB	18,900	22,215	25,000	0.49%	23,000	8.70	NA	NA
East of 67th Avenue	EB	20,800	18,411	23,000	0.93%	26,000	-11.54	NA	NA
West of 57th Avenue	EB	18,251	18,946	23,000	0.81%	22,000	4.55	22,485	2.29
East of 57th Avenue	EB	16,199	15,496	20,000	1.07%	20,000	0.00	16,675	19.94
West of 87th Avenue	WB	22,900	23,012	29,000	0.97%	28,000	3.57	31,517	-7.99
East of 87th Avenue	WB	15,698	17,395	22,000	0.98%	19,000	15.79	NA	NA
West of 79th Avenue	WB	17,000	16,573	23,000	1.37%	21,000	9.52	NA	NA
East of 79th Avenue	WB	18,050	19,598	26,000	1.18%	22,000	18.18	NA	NA
West of 75th Avenue	WB	18,900	18,460	23,000	0.92%	23,000	0.00	30,369	-24.26
East of 75th Avenue	WB	19,350	19,306	24,000	0.91%	24,000	0.00	NA	NA
West of 67th Avenue	WB	18,902	22,620	25,000	0.42%	23,000	8.70	NA	NA
East of 67th Avenue	WB	20,802	18,963	24,000	0.99%	26,000	-7.69	NA	NA
West of 57th Avenue	WB	18,252	19,685	23,000	0.65%	22,000	4.55	22,485	2.29
East of 57th Avenue	WB	16,202	15,523	23,000	1.65%	20,000	15.00	16,675	37.93

The reasonableness checks from independent data source checks indicate that the model forecasts align well with the region's compound growth rate-based projections. However, there is a lot of uncertainty

of the historic trends on the corridor and the data availability is limited. Hence the historic trends were generally observed to be over-forecasted.

Table 5 summarizes the combined volume on the important road segments and compares against the volumes of base year and no build alternative. In the no-build scenario, the corridor (4 Lanes) has a compound annual growth rate of 1.07%. In the build scenario, the corridor (6 Lanes) has a compound annual growth rate of growth rate of 1.61%.

Table 5: Combined AADTs at the Segments of Miami Gardens Drive

Location	2016 Count	2016 Volume	2040 NB Forecast	2040 Build Forecast
West of 87th Avenue	45,800	45,220	58,000	64,000
East of 87th Avenue	31,399	33,074	44,000	54,000
West of 79th Avenue	34,000	31,859	46,000	52,000
East of 79th Avenue	36,100	36,904	26,000	60,000
West of 75th Avenue	37,800	34,021	46,000	54,000
East of 75th Avenue	38,700	36,361	48,000	54,000
West of 67th Avenue	37,802	44,836	50,000	58,000
East of 67th Avenue	41,602	37,374	47,000	56,000
West of 57th Avenue	36,503	38,631	46,000	52,000
East of 57th Avenue	32,401	31,019	43,000	44,000

5.6 Turning Movement Forecast Development

The turning movement forecasts were developed for all the intersections within the area of influence. Since the CUBE Analyst OD estimation process generates reasonable turning movements, the turning movement forecasts were extracted directly from the subarea model. Quality control and reasonableness checks were performed on these turning movements. The future model output turns were compared against the existing turns from the data collection, and the future development potential of the TAZs.

The manual adjustments to the forecasts were performed when the future model volumes were projected to be less than the 2016 turning movement counts. In addition, if unreasonable growth was projected on certain links, those projections were manually adjusted by comparing against the average growth rates of the corridor.

Figure 6 is a snapshot of turning movement forecasting process of an intersection. The spreadsheet contains AM and PM hourly turning movements (TM). PM TM forecasts are populated in parentheses. All locations with orange highlights have undergone post processing of the model volumes.

Post Processing: In the post processing method, the model's mainline volumes at the west-end of the study area were used as control totals. They were adjusted eastwards, as the adjustments to the turns

of the intersections were warranted. However, mainline volume control points near major roadways such as Ludlam Road and NW 57th Avenue were considered in adjustment process.

As an example, if a turning movement from the 2040 model turns resulted less than the 2016 turns, two possibilities were considered:

1. If the turns were leading into a roadway/TAZ with development potential, a compound annual growth rate of 0.83% was applied on the corresponding 2016 turns
2. If the turns were leading into a roadway/TAZ with build out conditions, the forecasted turns were matched with the existing turns.

The 2020 AADT, DDHV and turning movement volumes were developed by interpolation methods. **Appendix A** presents the 2020 and 2040 turning movement forecasts.

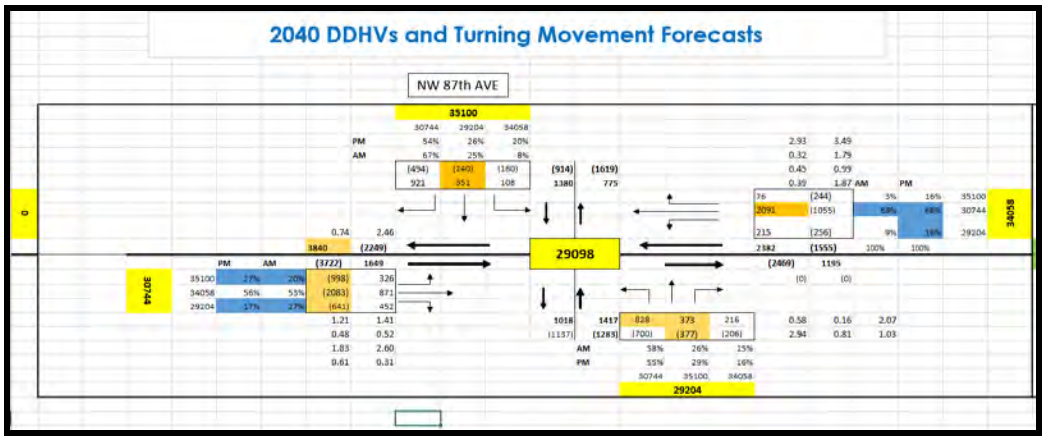

Figure 6: Snapshot of Intersection Turns at 87th Ave and Miami Gardens Drive

Appendices

Appendix A

2020 and 2040 AADT, DDHV and Turning Movement Forecasts

Miami Gardens Drive:2016 Peak Period and Daily Counts, 2020-2040 No-Build AADTs and DDHVs

Location 101	DAY	AM	PM	COUNT
2016	7400	951	609	10150
2020	7600	1023	660	
2040	10400	1380	914	0.73

Location 102	DAY	AM	PM	COUNT
2016	8700	685	1307	10150
2020	8800	699	1359	
2040	10800	775	1619	0.86

Location 1001	DAY	AM	PM	COUNT
2016	23000	3217	1254	22900
2020	24000	3321	1420	
2040	29000	3840	2249	1

NW 87th AVE

Location 1004	DAY	AM	PM	COUNT
2016	17000	2167	998	15698
2020	18000	2203	1091	
2040	22000	2382	1555	1.08

Location 1004	DAY	AM	PM	COUNT
2016	17000	2167	998	15698
2020	18000	2203	1091	
2040	22000	2382	1555	1.08

Shopping Center

Location 1004	DAY	AM	PM	COUNT
2016	17000	2094	994	15698
2020	18000	2120	1088	
2040	22000	2253	1556	1.08

Location 1004	DAY	AM	PM	COUNT
2016	17000	2083	994	15698
2020	18000	2120	1088	
2040	22000	2253	1556	1.08

NW 84th CT

Location 1004	DAY	AM	PM	COUNT
2016	17000	1969	974	15698
2020	18000	2004	1062	
2040	22000	2129	1499	1.08

Location 1002	DAY	AM	PM	COUNT
2016	22000	1178	2790	22900
2020	23000	1256	2945	
2040	29000	1649	3722	0.96

Location 1003	DAY	AM	PM	COUNT
2016	16000	694	1685	15701
2020	17000	778	1816	
2040	22000	1195	2469	1.02

Location 1003	DAY	AM	PM	COUNT
2016	16000	694	1685	15701
2020	17000	778	1816	
2040	22000	1195	2469	1.02

Location 1003	DAY	AM	PM	COUNT
2016	16000	694	1685	15701
2020	17000	778	1816	
2040	22000	1195	2469	1.02

Location 1003	DAY	AM	PM	COUNT
2016	16000	712	1685	15701
2020	17000	778	1816	
2040	22000	1195	2469	1.02

Location 1003	DAY	AM	PM	COUNT
2016	16000	768	1698	15701
2020	17000	835	1837	
2040	22000	1256	2526	1.02

Location 103	DAY	AM	PM	COUNT
2016	9500	912	972	9750
2020	9500	930	1000	
2040	9600	1018	1137	0.97

Location 104	DAY	AM	PM	COUNT
2016	9800	1212	821	9750
2020	10000	1246	899	
2040	10000	1417	1283	1.01

Location 1005	DAY	AM	PM	COUNT
2016	17000	1969	977	17300
2020	18000	2025	1060	
2040	24000	2311	1500	0.98

Mother of Our

Location 1005	DAY	AM	PM	COUNT
2016	17000	1958	997	17300
2020	18000	2014	1081	
2040	24000	2296	1496	0.98

Location 105	DAY	AM	PM	COUNT
2016	4200	510	244	5300
2020	4300	512	270	
2040	5000	522	397	0.79

Location 1005	DAY	AM	PM	COUNT
2016	17000	1958	997	17300
2020	18000	2014	1080	
2040	24000	2296	1496	0.98

NW 82nd AVE

Location 106	DAY	AM	PM	COUNT
2016	4000	327	444	5300
2020	4100	329	455	
2040	5000	333	507	0.75

Location 1008	DAY	AM	PM	COUNT
2016	17000	1841	1017	17000
2020	18000	1883	1088	
2040	24000	2090	1439	1

Location 129	DAY	AM	PM	COUNT
2016	3700	590	312	5450
2020	4100	637	350	
2040	6500	873	535	0.68

Location 1008	DAY	AM	PM	COUNT
2016	17000	1877	1027	17000
2020	18000	1906	1096	
2040	24000	2050	1439	1

NW 79th AVE

Location 130	DAY	AM	PM	COUNT
2016	4700	468	496	5450
2020	5300	503	528	
2040	8000	677	690	0.86

Location 1009	DAY	AM	PM	COUNT
2016	23000	2298	1677	18050
2020	24000	2311	1500	0.98

Location 1006	DAY	AM	PM	COUNT
2016	15000	768	1698	17300
2020	17000	835	1851	
2040	24000	1167	2614	0.87

Location 1006	DAY	AM	PM	COUNT
2016	15000	768	1698	17300
2020	17000	835	1851	
2040	24000	1167	2614	0.87

Location 1006	DAY	AM	PM	COUNT
2016	15000	768	1698	17300
2020	17000	835	1850	
2040	24000	1167	2614	0.87

Location 107	DAY	AM	PM	COUNT
2016	5200	533	353	5151
2020	5500	551	396	
2040	7000	642	610	1.01

Location 1007	DAY	AM	PM	COUNT
2016	15000	775	1611	17000
2020	16000	845	1745	
2040	23000	1191	2411	0.88

Location 108	DAY	AM	PM	COUNT
2016	5700	474	446	5150
2020	5900	509	468	
2040	7000	683	574	1.11

Location 1007	DAY	AM	PM	COUNT
2016	15000	775	1611	17000
2020	16000	842	1670	
2040	23000	1191	2411	0.88

Location 1010	DAY	AM	PM	COUNT
2016	17000	1027	1621	18050
2020	18000	1126	1693	
2040	23000	1620	2049	0.94

Location 1009	DAY	AM	PM	COUNT
2016	20000	2007	1223	18050
2020	21000	2056	1298	
2040	23000	2298	1677	1.11

Wentworth DR

Location 1030	DAY	AM	PM	COUNT
2016	18000	1863	1195	0
2020	19000	1912	1270	
2040	23000	2155	1644	NA

Location 1030	DAY	AM	PM	COUNT
2016	18000	1863	1195	0
2020	19000	1911	1270	
2040	23000	2155	1644	NA

Oakmont DR

Location 1030	DAY	AM	PM	COUNT
2016	18000	1747	1276	0
2020	19000	1760	1332	
2040	23000	1823	1614	NA

Location 1030	DAY	AM	PM	COUNT
2016	18000	1747	1276	0
2020	19000	1762	1333	
2040	23000	1832	1614	NA

NW 75th PL

Location 1012	DAY	AM	PM	COUNT
2016	19000	1932	1284	19350
2020	20000	1955	1339	
2040	24000	2064	1612	0.98

Location 1010	DAY	AM	PM	COUNT
2016	17000	1026	1624	18050
2020	18000	1125	1695	
2040	23000	1620	2049	0.94

Location 1029	DAY	AM	PM	COUNT
2016	16000	1000	1547	0
2020	17000	1098	1615	
2040	22000	1590	1958	NA

Location 1029	DAY	AM	PM	COUNT
2016	16000	1000	1583	0
2020	17000	1099	1646	
2040	22000	1590	1958	NA

Location 1029	DAY	AM	PM	COUNT
2016	16000	990	1601	0
2020	17000	1087	1638	
2040	22000	1567	1819	NA

Location 1029	DAY	AM	PM	COUNT
2016	16000	990	1610	0
2020	17000	1086	1645	
2040	22000	1567	1819	NA

Location 1011	DAY	AM	PM	COUNT
2016	17000	1001	1674	19350
2020	18000	1099	1713	
2040	22000	1588	1908	0.88

Location 112	DAY	AM	PM	COUNT
2016	1700	528	493	6300
2020	2700	548	507	
2040	6000	644	576	0.27

Location 111	DAY	AM	PM	COUNT
2016	2300	354	551	6300
2020	2900	368	572	
2040	6000	433	672	0.37

1. The volumes and counts shown in the boxes are directional.
2. Enteris in 'Day 'columns show the model volume/forecasts for year 2016, 2020 and 2040 respectively.
3. The 2016 corrosponding entries for AM/PM are the turning counts and 2020/2040 are forecasted DDHVs.
4. In the count column, the entry in 2016 row is the count at that location and the entry corrosponding 2040's row is the volume to count ratio for the year 2016

Location 1012				
	DAY	AM	PM	COUNT
2016	19000	1872	1318	19350
2020	20000	1949	1375	
2040	24000	2039	1846	0.98

Location 1014				
	DAY	AM	PM	COUNT
2016	20000	1511	1343	18700
2020	21000	1646	1391	
2040	25000	2025	1817	1.07

Location 1015				
	DAY	AM	PM	COUNT
2016	20000	1511	1343	0
2020	21000	1646	1391	
2040	25000	2025	1817	NA

NW 73rd AVE

NW 68 AVE

Location 1018				
	DAY	AM	PM	COUNT
2016	21000	1441	1531	0
2020	22000	1572	1584	
2040	26000	1765	1551	NA

Location 1011				
	DAY	AM	PM	COUNT
2016	17000	1001	1665	19350
2020	18000	1104	1738	
2040	24000	1658	2304	0.88

Location 1013				
	DAY	AM	PM	COUNT
2016	19000	1027	1410	18700
2020	20000	1117	1456	
2040	25000	1681	2025	1.02

Location 1016				
	DAY	AM	PM	COUNT
2016	19000	1027	1410	0
2020	20000	1117	1456	
2040	25000	1681	2025	NA

Location 1017				
	DAY	AM	PM	COUNT
2016	21000	1291	1380	0
2020	22000	1391	1426	
2040	26000	2007	2000	NA

Location 116				
	DAY	AM	PM	COUNT
2016	13000	140	409	3800
2020	14000	223	432	
2040	18000	639	543	3.42

Location 115				
	DAY	AM	PM	COUNT
2016	16000	485	190	3800
2020	17000	500	197	
2040	20000	577	232	4.21

Location 118				
	DAY	AM	PM	COUNT
2016	6200	269	618	6500
2020	6400	277	637	
2040	8600	316	727	0.95

Location 117				
	DAY	AM	PM	COUNT
2016	7000	614	395	6500
2020	7400	636	409	
2040	9200	749	482	1.08

Location 131				
	DAY	AM	PM	COUNT
2016	2300	245	159	2550
2020	2400	257	173	
2040	4000	311	240	0.9

Location 132				
	DAY	AM	PM	COUNT
2016	3100	77	246	2550
2020	3100	87	271	
2040	4000	132	396	1.22

Location 119				
	DAY	AM	PM	COUNT
2016	20000	1334	1426	19450
2020	21000	1455	1515	
2040	28000	2061	1954	1.03

Location 120				
	DAY	AM	PM	COUNT
2016	19000	1154	1391	19451
2020	20000	1288	1540	
2040	25000	1953	2284	0.98

Location 1018				
	DAY	AM	PM	COUNT
2016	21000	1441	1531	0
2020	22000	1572	1584	
2040	26000	1765	1551	NA

Bob-O-Link DR

Location 1020				
	DAY	AM	PM	COUNT
2016	23000	1468	1703	18902
2020	23000	1598	1768	
2040	25000	1790	1796	1.22

Location 1020				
	DAY	AM	PM	COUNT
2016	23000	1468	1703	18902
2020	23000	1531	1729	
2040	25000	1839	1859	1.22

Ludlam Rd

Location 1021				
	DAY	AM	PM	COUNT
2016	19000	1274	1538	20802
2020	20000	1343	1615	
2040	24000	1683	2000	0.91

Location 1017				
	DAY	AM	PM	COUNT
2016	21000	1291	1380	0
2020	22000	1391	1426	
2040	26000	2007	2000	NA

Location 1019				
	DAY	AM	PM	COUNT
2016	22000	1586	1457	18900
2020	23000	1690	1503	
2040	25000	2327	2079	1.16

Location 1019				
	DAY	AM	PM	COUNT
2016	22000	1586	1457	18900
2020	23000	1703	1545	
2040	25000	2284	1987	1.16

Location 1022				
	DAY	AM	PM	COUNT
2016	18000	1724	1370	20800
2020	19000	1810	1446	
2040	23000	2240	1829	0.87

Location 121				
	DAY	AM	PM	COUNT
2016	20000	1191	1454	20948
2020	20000	1257	1530	
2040	21500	1589	1907	0.95

Location 122				
	DAY	AM	PM	COUNT
2016	19000	1343	1497	20950
2020	19000	1385	1570	
2040	20500	1593	1938	0.91

Location 514				
	DAY	AM	PM	COUNT
2016	0	643	298	4900
2020	NA	664	309	
2040	NA	769	363	NA

Location 515				
	DAY	AM	PM	COUNT
2016	0	271	421	4900
2020	NA	298	454	
2040	NA	431	614	NA

Location 1021				
	DAY	AM	PM	COUNT
2016	19000	1274	1538	20802
2020	20000	1332	1603	
2040	24000	1622	1922	0.91

NW 62nd AVE

Location 1024				
	DAY	AM	PM	COUNT
2016	20000	1034	1321	0
2020	21000	1088	1394	
2040	23000	1360	1758	NA

Location 1024				
	DAY	AM	PM	COUNT
2016	20000	1034	1321	0
2020	21000	1088	1394	
2040	23000	1360	1758	NA

NW 59th AVE

Location 1024				
	DAY	AM	PM	COUNT
2016	20000	1168	1349	0
2020	21000	1228	1418	
2040	23000	1523	1767	NA

Location 1022				
	DAY	AM	PM	COUNT
2016	18000	1724	1370	20800
2020	19000	1797	1438	
2040	23000	2162	1774	0.87

Location 1023				
	DAY	AM	PM	COUNT
2016	19000	1863	1219	0
2020	20000	1941	1280	
2040	23000	2331	1590	NA

Location 1023				
	DAY	AM	PM	COUNT
2016	19000	1863	1219	0
2020	20000	1941	1280	
2040	23000	2331	1590	NA

Location 1023				
	DAY	AM	PM	COUNT
2016	19000	1584	1156	0
2020	20000	1652	1245	
2040	23000	1991	1713	NA

Location 124				
	DAY	AM	PM	COUNT
2016	8400	123	71	1700
2020	9200	127	74	
2040	13000	150	86	4.94

Location 123				
	DAY	AM	PM	COUNT
2016	8200	130	260	1700
2020	9000	149	270	
2040	13000	243	317	4.82

Location				
1024				
	DAY	AM	PM	COUNT
2016	20000	1168	1349	0
2020	21000	1228	1418	
2040	23000	1523	1767	NA

Location				
1024				
	DAY	AM	PM	COUNT
2016	20000	1175	1327	0
2020	21000	1234	1395	
2040	23000	1601	1740	NA

Location				
126				
	DAY	AM	PM	COUNT
2016	25000	2166	1620	25700
2020	26000	2309	1712	
2040	29000	3022	2171	0.97

Location				
125				
	DAY	AM	PM	COUNT
2016	27000	1805	2344	25703
2020	28000	1892	2464	
2040	31000	2323	3061	1.05

Location				
1025				
	DAY	AM	PM	COUNT
2016	20000	1175	1327	18252
2020	21000	1234	1395	
2040	23000	1601	1740	1.1

Location				
1028				
	DAY	AM	PM	COUNT
2016	16000	1077	1106	16202
2020	17000	1169	1238	
2040	20000	1699	1898	0.99

Location				
1023				
	DAY	AM	PM	COUNT
2016	19000	1584	1156	0
2020	20000	1652	1245	
2040	23000	1991	1713	NA

Location				
1023				
	DAY	AM	PM	COUNT
2016	19000	1556	1164	0
2020	20000	1625	1255	
2040	23000	1960	1725	NA

Location				
1026				
	DAY	AM	PM	COUNT
2016	19000	1556	1164	18251
2020	20000	1625	1255	
2040	23000	1960	1725	1.04

Location				
1027				
	DAY	AM	PM	COUNT
2016	15000	1472	1205	16199
2020	16000	1570	1314	
2040	20000	2047	1873	0.93

Location				
127				
	DAY	AM	PM	COUNT
2016	24000	2007	1481	23400
2020	25000	2140	1586	
2040	29000	2803	2108	1.03

Location				
128				
	DAY	AM	PM	COUNT
2016	26000	1660	2467	23399
2020	26000	1733	2554	
2040	28000	2093	2988	1.11

Shopping Center

NW 57th AVE

Miami Gardens Drive: 2040 No-Build DDHVs and Turning Movement Forecasts

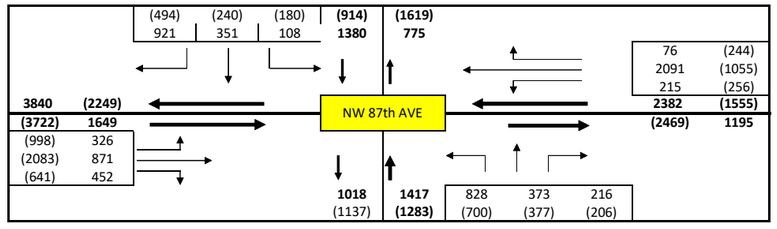

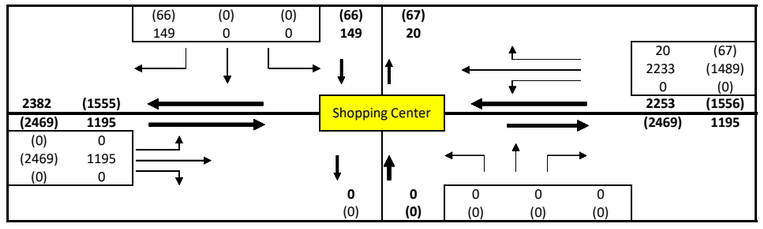

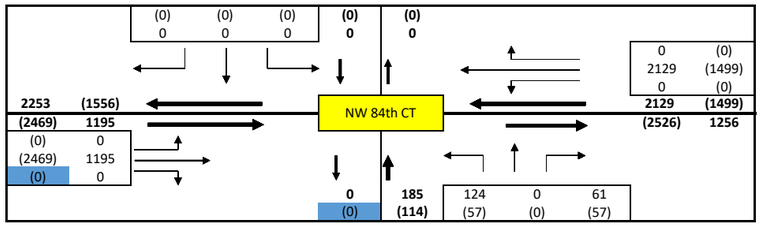

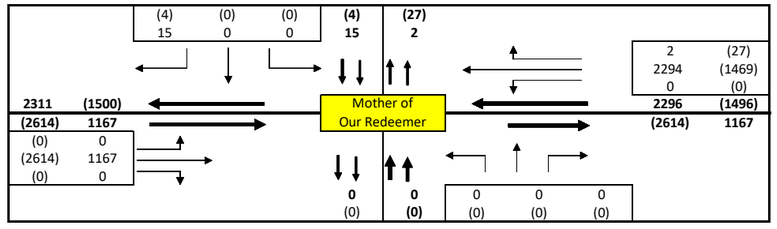

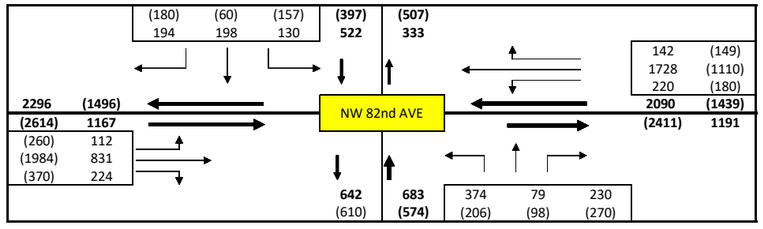

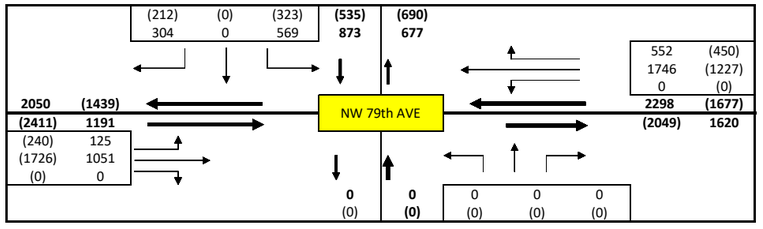

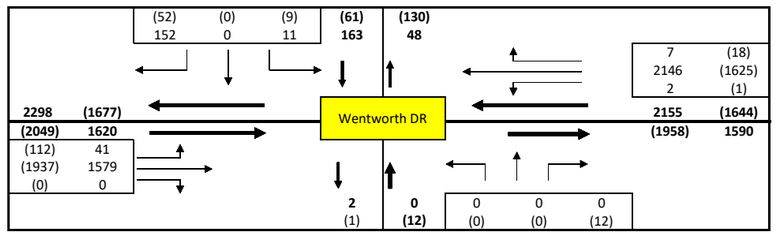

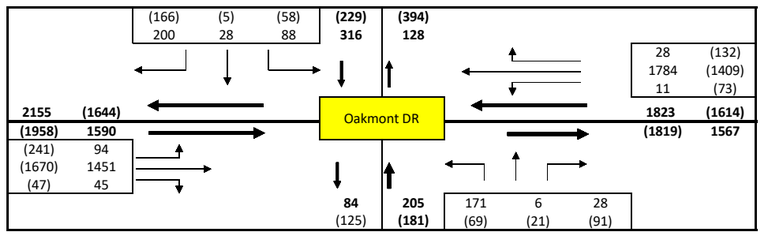

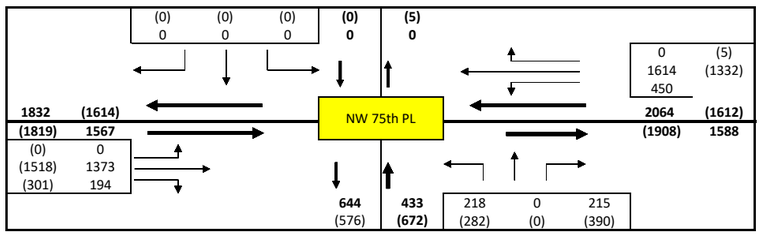

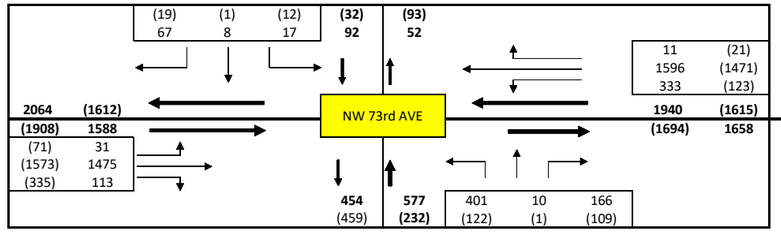

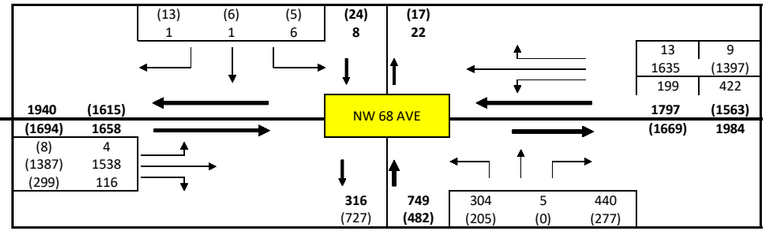

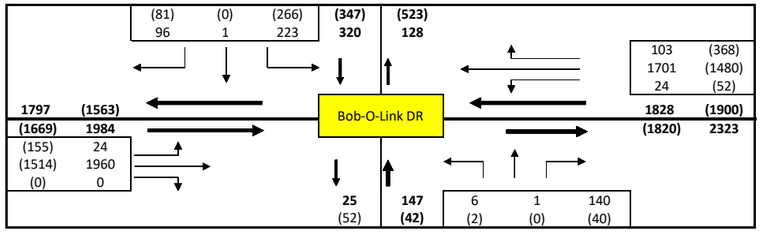

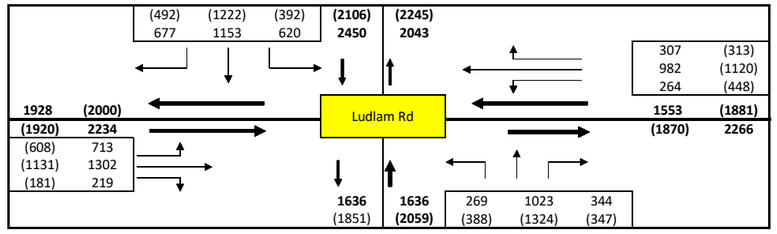

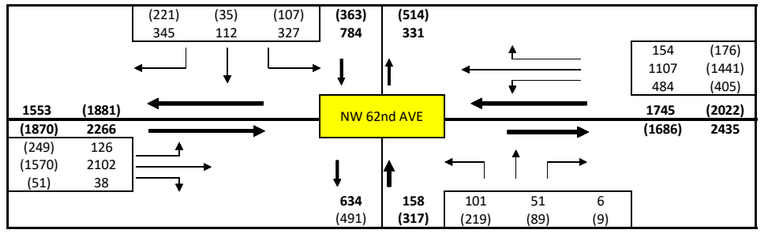

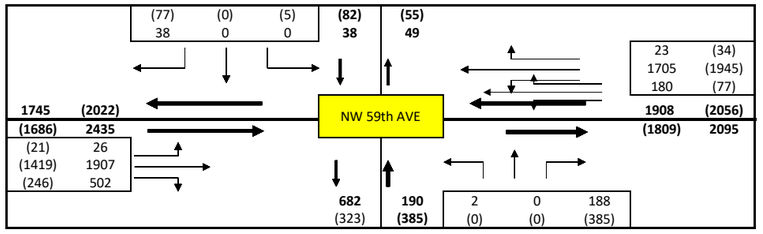

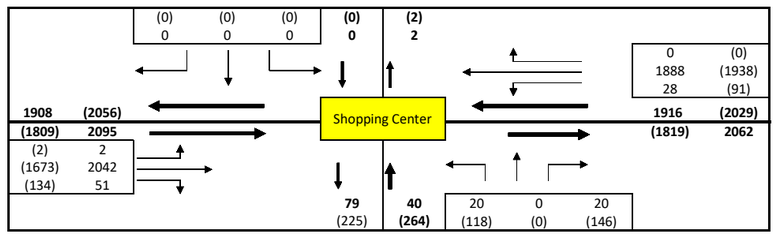

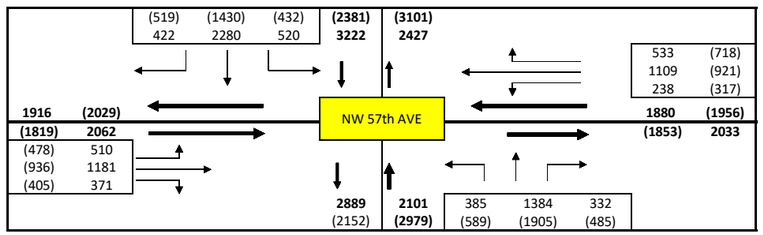

NOTES:
1. PM entries are displayed in parentheses.
2.Cells highlighted in Yellow represents the cross-streets.

Miami Gardens Drive: 2020 No-Build DDHVs and Turning Movement Forecasts

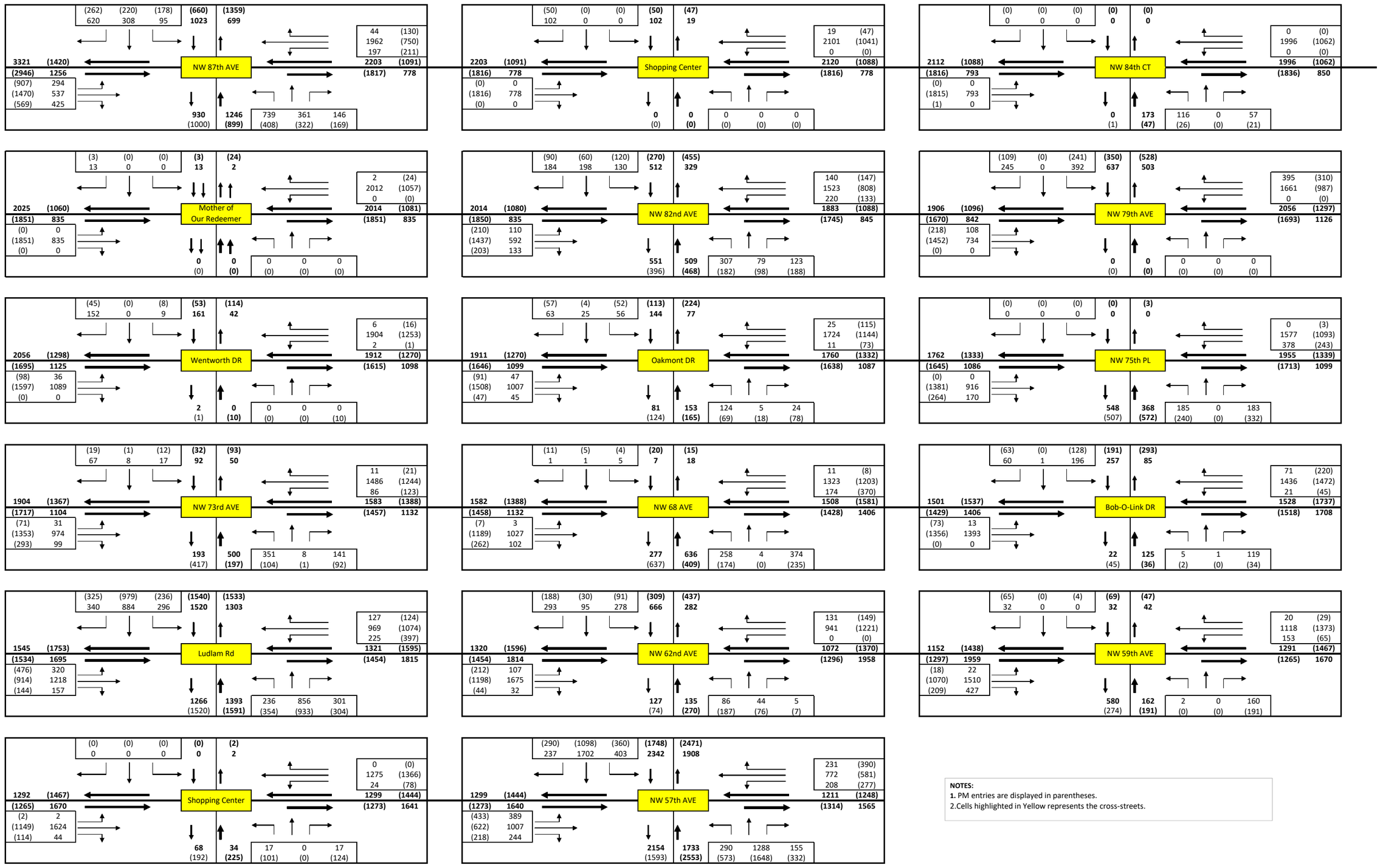

NOTES:
1. PM entries are displayed in parentheses.
2.Cells highlighted in Yellow represents the cross-streets.

Miami Gardens Drive:2016 Peak Period and Daily Counts, Build 2020-2040 AADTs and DDHVs

Location 101	DAY	AM	PM	COUNT
2016	7400	951	609	10150
2020	7600	1017	657	
2040	8800	1341	899	0.73

Location 102	DAY	AM	PM	COUNT
2016	8700	685	1307	10150
2020	8700	701	1349	
2040	10400	777	1560	0.86

Location 1001	DAY	AM	PM	COUNT
2016	23000	3217	1254	22900
2020	26000	3500	1563	
2040	39000	4913	3104	1

Location 1004	DAY	AM	PM	COUNT
2016	17000	2167	998	15698
2020	19000	2355	1188	
2040	29000	3294	2140	1.08

NW 87th AVE

Location 1004	DAY	AM	PM	COUNT
2016	17000	2167	998	15698
2020	19000	2355	1188	
2040	29000	3294	2140	1.08

Shopping Center

Location 1004	DAY	AM	PM	COUNT
2016	17000	2094	994	15698
2020	19000	2274	1185	
2040	29000	3174	2142	1.08

Location 1004	DAY	AM	PM	COUNT
2016	17000	2083	994	15698
2020	19000	2265	1186	
2040	29000	3174	2142	1.08

NW 84th CT

Location 1004	DAY	AM	PM	COUNT
2016	17000	1969	974	15698
2020	19000	2138	1154	
2040	29000	3015	2108	1.08

Location 1002	DAY	AM	PM	COUNT
2016	22000	1178	2790	22900
2020	23000	1282	3037	
2040	29000	1801	4275	0.96

Location 1003	DAY	AM	PM	COUNT
2016	16000	694	1685	15701
2020	17000	814	1902	
2040	24000	1410	2988	1.02

Location 1003	DAY	AM	PM	COUNT
2016	16000	694	1685	15701
2020	17000	813	1902	
2040	24000	1410	2988	1.02

Location 1003	DAY	AM	PM	COUNT
2016	16000	694	1685	15701
2020	17000	813	1902	
2040	24000	1410	2988	1.02

Location 1003	DAY	AM	PM	COUNT
2016	16000	712	1685	15701
2020	17000	821	1903	
2040	24000	1410	2988	1.02

Location 1003	DAY	AM	PM	COUNT
2016	16000	768	1698	15701
2020	17000	879	1918	
2040	24000	1431	3013	1.02

Location 103	DAY	AM	PM	COUNT
2016	9500	912	972	9750
2020	9800	972	1039	
2040	11000	1266	1376	0.97

Location 104	DAY	AM	PM	COUNT
2016	9800	1212	821	9750
2020	11000	1333	970	
2040	15000	1930	1714	1.01

Location 1005	DAY	AM	PM	COUNT
2016	17000	1969	977	17300
2020	19000	2143	1161	
2040	29000	3015	2108	0.98

Mother of Our

Location 1005	DAY	AM	PM	COUNT
2016	17000	1958	997	17300
2020	19000	2132	1182	
2040	29000	3000	2104	0.98

Location 105	DAY	AM	PM	COUNT
2016	4200	510	244	5300
2020	4500	525	271	
2040	6000	600	407	0.79

Location 1005	DAY	AM	PM	COUNT
2016	17000	1958	997	17300
2020	19000	2131	1182	
2040	29000	3000	2104	0.98

NW 82nd AVE

Location 106	DAY	AM	PM	COUNT
2016	4000	327	444	5300
2020	4300	338	467	
2040	5900	395	579	0.75

Location 1008	DAY	AM	PM	COUNT
2016	17000	1841	1017	17000
2020	19000	2009	1195	
2040	28000	2853	2086	1

Location 129	DAY	AM	PM	COUNT
2016	3700	590	312	5450
2020	4100	659	348	
2040	5800	1002	526	0.68

Location 1008	DAY	AM	PM	COUNT
2016	17000	1877	1027	17000
2020	19000	2034	1211	
2040	28000	2815	2126	1

NW 79th AVE

Location 130	DAY	AM	PM	COUNT
2016	4700	468	496	5450
2020	5200	520	567	
2040	7500	780	925	0.86

Location 1009	DAY	AM	PM	COUNT
2016	20000	2007	1223	18050
2020	22000	2177	1429	
2040	33000	3024	2461	1.11

Location 1009	DAY	AM	PM	COUNT
2016	19000	2063	1284	19350
2020	21000	2063	1460	
2040	30000	2715	2332	0.98

Location 1006	DAY	AM	PM	COUNT
2016	15000	768	1698	17300
2020	17000	879	1917	
2040	24000	1431	3013	0.87

Location 1006	DAY	AM	PM	COUNT
2016	15000	768	1698	17300
2020	17000	879	1917	
2040	24000	1431	3013	0.87

Location 1006	DAY	AM	PM	COUNT
2016	15000	768	1698	17300
2020	17000	879	1917	
2040	24000	1431	3013	0.87

Location 107	DAY	AM	PM	COUNT
2016	5200	533	353	5151
2020	5400	563	392	
2040	6300	713	590	1.01

Location 108	DAY	AM	PM	COUNT
2016	5700	474	446	5150
2020	5800	510	473	
2040	6100	688	603	1.11

Location 1007	DAY	AM	PM	COUNT
2016	15000	775	1611	17000
2020	17000	891	1815	
2040	24000	1464	2836	0.88

Location 1007	DAY	AM	PM	COUNT
2016	15000	775	1611	17000
2020	17000	894	1808	
2040	24000	1464	2836	0.88

Location 1010	DAY	AM	PM	COUNT
2016	17000	1027	1621	18050
2020	19000	1176	1806	
2040	27000	1918	2733	0.94

Wentworth DR

Location 1009	DAY	AM	PM	COUNT
2016	20000	2007	1223	18050
2020	22000	2177	1429	
2040	33000	3024	2461	1.11

Location 1030	DAY	AM	PM	COUNT
2016	18000	1863	1195	0
2020	20000	2033	1401	
2040	31000	2881	2428	NA

Location 1030	DAY	AM	PM	COUNT
2016	18000	1863	1195	0
2020	20000	2032	1401	
2040	31000	2881	2428	NA

Oakmont DR

Location 1030	DAY	AM	PM	COUNT
2016	18000	1747	1276	0
2020	20000	1877	1470	
2040	31000	2527	2441	NA

Location 1030	DAY	AM	PM	COUNT
2016	18000	1747	1276	0
2020	20000	1877	1471	
2040	31000	2527	2441	NA

NW 75th PL

Location 1012	DAY	AM	PM	COUNT
2016	19000	1932	1284	19350
2020	21000	2063	1460	
2040	30000	2715	2332	0.98

Location 1010	DAY	AM	PM	COUNT
2016	17000	1026	1624	18050
2020	19000	1175	1809	
2040	27000	1918	2733	0.94

Location 1029	DAY	AM	PM	COUNT
2016	16000	1000	1547	0
2020	18000	1148	1729	
2040	25000	1888	2642	NA

Location 1029	DAY	AM	PM	COUNT
2016	16000	1000	1583	0
2020	18000	1149	1760	
2040	25000	1888	2642	NA

Location 1029	DAY	AM	PM	COUNT
2016	16000	990	1601	0
2020	18000	1125	1752	
2040	25000	1798	2503	NA

Location 1029	DAY	AM	PM	COUNT
2016	16000	990	1610	0
2020	18000	1125	1759	
2040	25000	1798	2503	NA

Location 1011	DAY	AM	PM	COUNT
2016	17000	1001	1674	19350
2020	18000	1137	1829	
2040	24000	1812	2599	0.88

Location 112	DAY	AM	PM	COUNT
2016	1700	528	493	6300
2020	2400	554	515	
2040	6100	682	623	0.27

Location 111	DAY	AM	PM	COUNT
2016	2300	354	551	6300
2020	3000	380	599	
2040	6700	508	833	0.37

1. The volumes and counts shown in the boxes are directional.
2. Enteris in 'Day 'columns show the model volume/forecasts for year 2016, 2020 and 2040 respectively.
3. The 2016 corrosponding entries for AM/PM are the turning counts and 2020/2040 are forecasted DDHVs.
4. In the count column, the entry in 2016 row is the count at that location and the entry corrosponding 2040's row is the volume to count ratio for the year 2016

Location 1012				
	DAY	AM	PM	COUNT
2016	19000	1872	1318	19350
2020	21000	2012	1488	
2040	30000	2715	2332	0.98

Location 1014				
	DAY	AM	PM	COUNT
2016	20000	1511	1343	18700
2020	22000	1719	1509	
2040	32000	2758	2338	1.07

Location 1015				
	DAY	AM	PM	COUNT
2016	20000	1511	1343	0
2020	22000	1719	1508	
2040	32000	2758	2338	NA

NW 73rd AVE

NW 68 AVE

Location 1018				
	DAY	AM	PM	COUNT
2016	21000	1441	1531	0
2020	23000	1645	1701	
2040	33000	2615	2286	NA

Location 1011				
	DAY	AM	PM	COUNT
2016	17000	1001	1665	19350
2020	18000	1144	1836	
2040	24000	1812	2599	0.88

Location 1013				
	DAY	AM	PM	COUNT
2016	19000	1027	1410	18700
2020	20000	1172	1567	
2040	23000	1894	2353	1.02

Location 1016				
	DAY	AM	PM	COUNT
2016	19000	1027	1410	0
2020	20000	1172	1568	
2040	23000	1894	2353	NA

Location 1017				
	DAY	AM	PM	COUNT
2016	21000	1291	1380	0
2020	22000	1446	1538	
2040	26000	2220	2328	NA

Location 116				
	DAY	AM	PM	COUNT
2016	13000	140	409	3800
2020	14000	234	425	
2040	18000	703	506	3.42

Location 115				
	DAY	AM	PM	COUNT
2016	16000	485	190	3800
2020	17000	500	197	
2040	20000	577	232	4.21

Location 118				
	DAY	AM	PM	COUNT
2016	6200	269	618	6500
2020	6800	277	637	
2040	9600	316	727	0.95

Location 117				
	DAY	AM	PM	COUNT
2016	7000	614	395	6500
2020	7700	636	409	
2040	11000	749	482	1.08

Location 131				
	DAY	AM	PM	COUNT
2016	2300	245	159	2550
2020	2400	258	194	
2040	2900	322	367	0.9

Location 132				
	DAY	AM	PM	COUNT
2016	3100	77	246	2550
2020	3100	85	293	
2040	3900	122	523	1.22

Location 119				
	DAY	AM	PM	COUNT
2016	20000	1334	1426	19450
2020	22000	1532	1591	
2040	30000	2522	2412	1.03

Location 120				
	DAY	AM	PM	COUNT
2016	19000	1154	1391	19451
2020	21000	1313	1584	
2040	28000	2103	2550	0.98

Location 1018				
	DAY	AM	PM	COUNT
2016	21000	1441	1531	0
2020	23000	1638	1657	
2040	33000	2615	2286	NA

Bob-O-Link

Location 1020				
	DAY	AM	PM	COUNT
2016	23000	1468	1703	18902
2020	25000	1667	1854	
2040	33000	2659	2603	1.22

Location 1020				
	DAY	AM	PM	COUNT
2016	23000	1468	1703	18902
2020	25000	1653	1859	
2040	33000	2577	2637	1.22

Ludlam Rd

Location 1021				
	DAY	AM	PM	COUNT
2016	19000	1274	1538	20802
2020	21000	1463	1688	
2040	31000	2408	2435	0.91

Location 1017				
	DAY	AM	PM	COUNT
2016	21000	1291	1380	0
2020	22000	1446	1539	
2040	26000	2220	2328	NA

Location 1019				
	DAY	AM	PM	COUNT
2016	22000	1586	1457	18900
2020	23000	1751	1628	
2040	28000	2580	2479	1.16

Location 1019				
	DAY	AM	PM	COUNT
2016	22000	1586	1457	18900
2020	23000	1761	1608	
2040	28000	2632	2361	1.16

Location 121				
	DAY	AM	PM	COUNT
2016	20000	1191	1454	20948
2020	20000	1306	1516	
2040	21000	1881	1824	0.95

Location 1022				
	DAY	AM	PM	COUNT
2016	18000	1724	1370	20800
2020	20000	1877	1506	
2040	28000	2643	2180	0.87

Location 122				
	DAY	AM	PM	COUNT
2016	19000	1343	1497	20950
2020	19000	1393	1578	
2040	21000	1642	1983	0.91

Location 514				
	DAY	AM	PM	COUNT
2016	0	643	298	0
2020	NA	681	309	
2040	NA	869	363	NA

Location 515				
	DAY	AM	PM	COUNT
2016	0	271	421	0
2020	NA	298	454	
2040	NA	431	614	NA

Location 1021				
	DAY	AM	PM	COUNT
2016	19000	1274	1538	20802
2020	21000	1451	1681	
2040	31000	2334	2390	0.91

Location 1024				
	DAY	AM	PM	COUNT
2016	20000	1034	1321	0
2020	22000	1190	1472	
2040	29000	1972	2226	NA

NW 62nd AVE

Location 1024				
	DAY	AM	PM	COUNT
2016	20000	1034	1321	0
2020	22000	1190	1472	
2040	29000	1972	2226	NA

NW 59th AVE

Location 1024				
	DAY	AM	PM	COUNT
2016	20000	1168	1349	0
2020	22000	1329	1496	
2040	29000	2135	2235	NA

Location 1022				
	DAY	AM	PM	COUNT
2016	18000	1724	1370	20800
2020	20000	1855	1499	
2040	28000	2510	2140	0.87

Location 1023				
	DAY	AM	PM	COUNT
2016	19000	1863	1219	0
2020	20000	1999	1341	
2040	27000	2679	1956	NA

Location 1023				
	DAY	AM	PM	COUNT
2016	19000	1863	1219	0
2020	20000	1999	1342	
2040	27000	2679	1956	NA

Location 1023				
	DAY	AM	PM	COUNT
2016	19000	1584	1156	0
2020	20000	1710	1310	
2040	27000	2339	2079	NA

Location 124				
	DAY	AM	PM	COUNT
2016	8400	123	71	1700
2020	9700	127	74	
2040	16000	150	86	4.94

Location 123				
	DAY	AM	PM	COUNT
2016	8200	130	260	1700
2020	9500	149	270	
2040	16000	243	317	4.82

Location				
1024				
	DAY	AM	PM	COUNT
2016	20000	1168	1349	0
2020	22000	1329	1497	
2040	29000	2135	2235	NA

Location				
1024				
	DAY	AM	PM	COUNT
2016	20000	1175	1327	0
2020	22000	1335	1474	
2040	29000	2133	2208	NA

Location				
126				
	DAY	AM	PM	COUNT
2016	25000	2166	1620	25700
2020	26000	2337	1750	
2040	33000	3195	2399	0.97

Location				
125				
	DAY	AM	PM	COUNT
2016	27000	1805	2344	25703
2020	28000	1917	2494	
2040	31000	2479	3242	1.05

Location				
1025				
	DAY	AM	PM	COUNT
2016	20000	1175	1327	18252
2020	22000	1335	1473	
2040	29000	2133	2208	1.1

Location				
1028				
	DAY	AM	PM	COUNT
2016	16000	1077	1106	16202
2020	17000	1270	1261	
2040	21000	2235	2034	0.99

Location				
1023				
	DAY	AM	PM	COUNT
2016	19000	1584	1156	0
2020	20000	1710	1310	
2040	27000	2339	2079	NA

Location				
1023				
	DAY	AM	PM	COUNT
2016	19000	1556	1164	0
2020	20000	1681	1318	
2040	27000	2306	2089	NA

Location				
1026				
	DAY	AM	PM	COUNT
2016	19000	1556	1164	18251
2020	20000	1681	1318	
2040	27000	2306	2089	1.04

Location				
1027				
	DAY	AM	PM	COUNT
2016	15000	1472	1205	16199
2020	16000	1596	1328	
2040	22000	2220	1944	0.93

Location				
127				
	DAY	AM	PM	COUNT
2016	24000	2007	1481	23400
2020	25000	2176	1606	
2040	29000	3020	2224	1.03

Location				
128				
	DAY	AM	PM	COUNT
2016	26000	1660	2467	23399
2020	27000	1736	2572	
2040	31000	2116	3096	1.11

Shopping Center

NW 57th AVE

Miami Gardens Drive: 2040 Build DDHVs and Turning Movement Forecasts

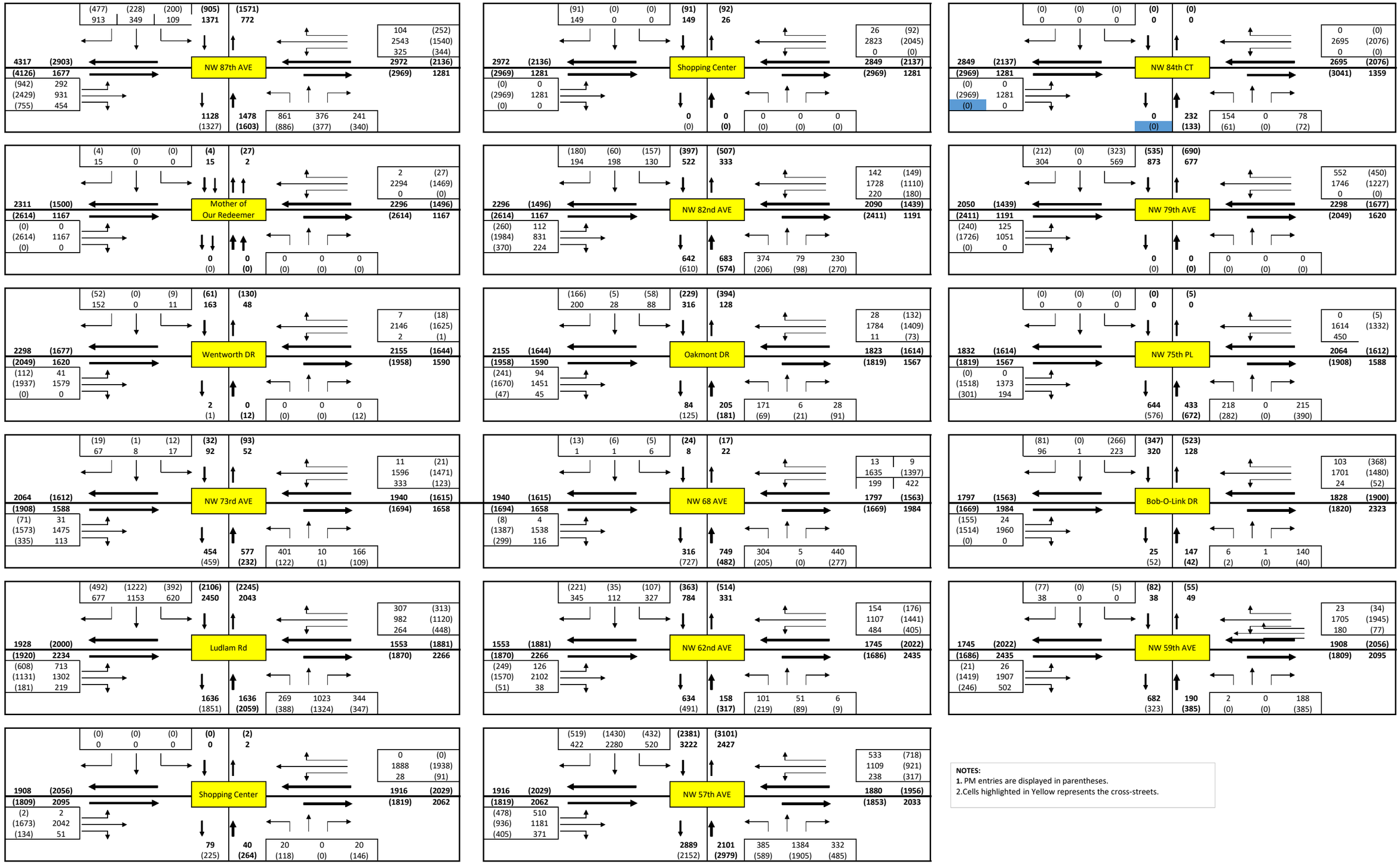

NOTES:
1. PM entries are displayed in parentheses.
2.Cells highlighted in Yellow represents the cross-streets.

Miami Gardens Drive: 2020 Build DDHVs and Turning Movement Forecasts

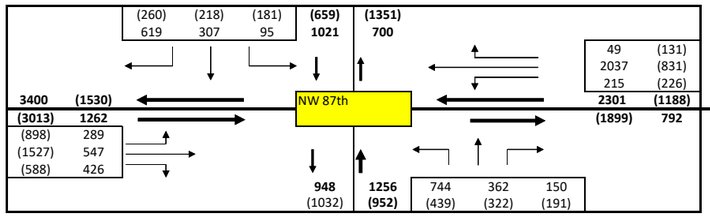

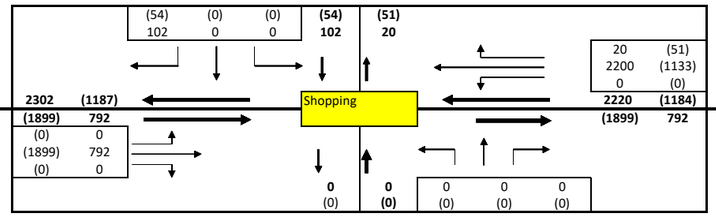

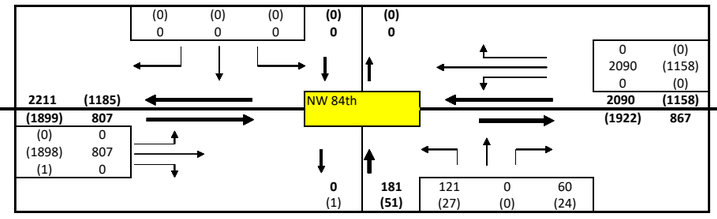

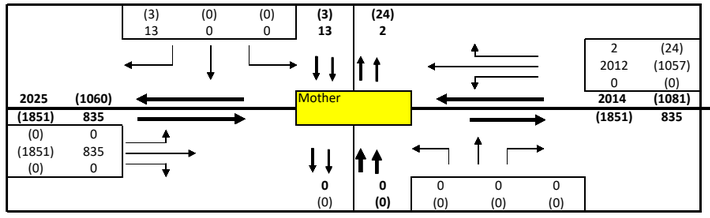

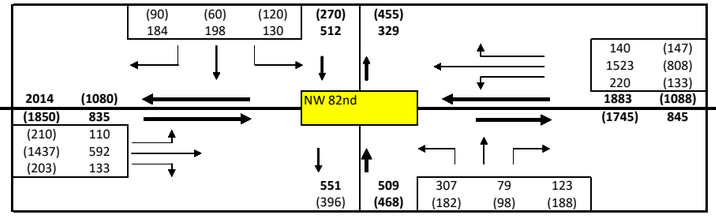

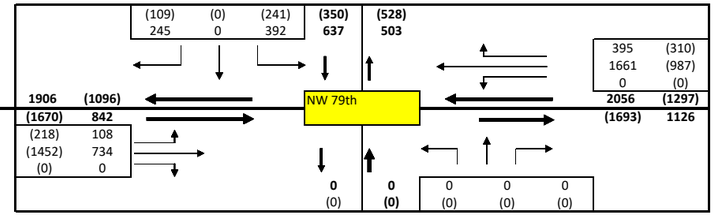

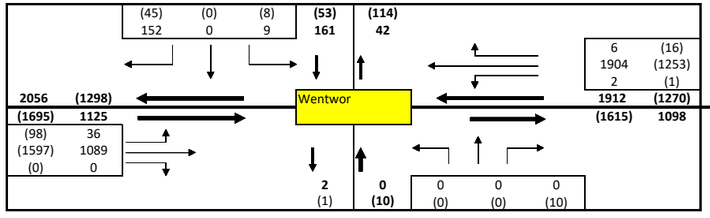

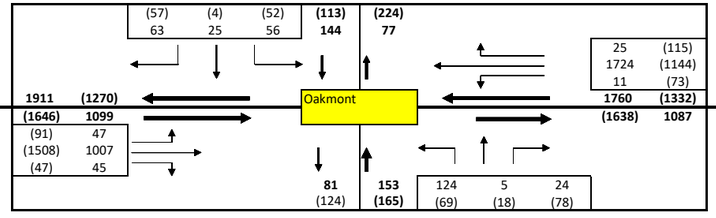

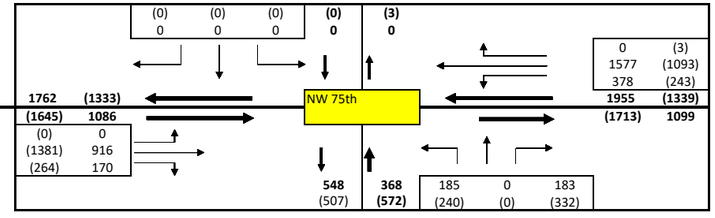

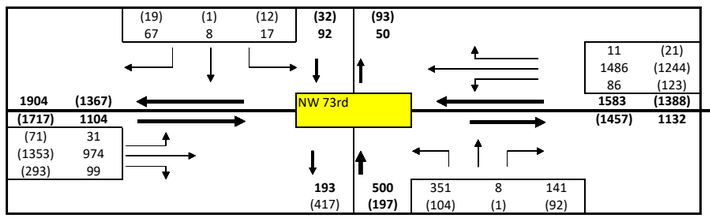

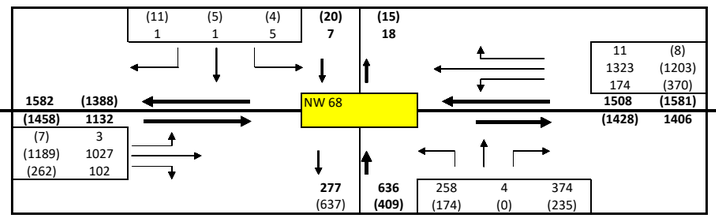

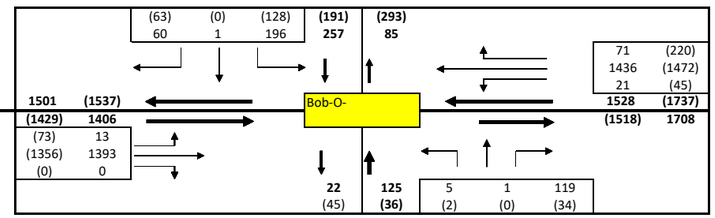

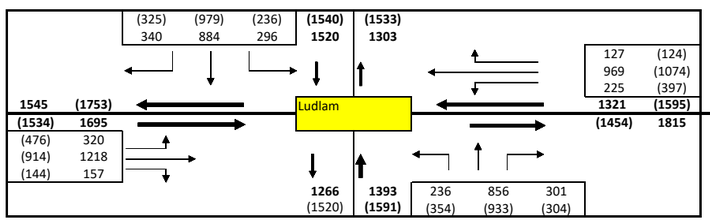

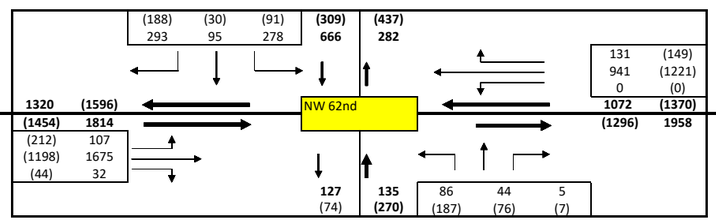

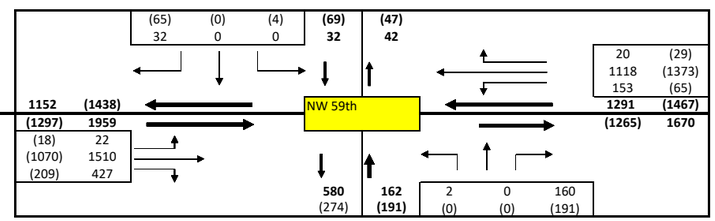

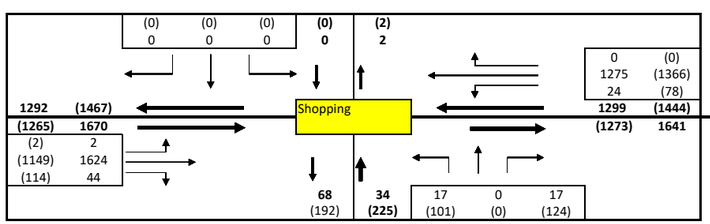

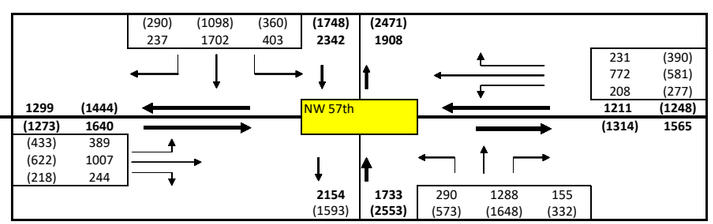

NOTES:
1. PM entries are displayed in parentheses.
2.Cells highlighted in Yellow represents the cross-streets.

Appendix B

I-75 Bridge Openings at NW 154 Street and NW 170 Street

Traffic Study, Final Report September 10, 2018

(Included under separate cover)

APPENDIX H

Build Alternative Concept Plan

FDOT **FLORIDA DEPARTMENT OF TRANSPORTATION**

SR 860 / MIAMI GARDENS DRIVE RE-EVALUATION

FM NO. 438864-1-22-02

PRELIMINARY ROADWAY IMPROVEMENTS

DRAFT FOR REVIEW 10/04/2019

SHEET: 1 OF 3

FDOT **FLORIDA DEPARTMENT OF TRANSPORTATION**

SR 860 / MIAMI GARDENS DRIVE RE-EVALUATION

FM NO. 438864-1-22-02

PRELIMINARY ROADWAY IMPROVEMENTS

DRAFT FOR REVIEW 10/04/2016

SHEET: 2 OF 3

FDOT **FLORIDA DEPARTMENT OF TRANSPORTATION**

SR 860 / MIAMI GARDENS DRIVE RE-EVALUATION

FM NO. 438864-1-22-02

PRELIMINARY ROADWAY IMPROVEMENTS

DRAFT FOR REVIEW 10/04/2016

SHEET: 3 OF 3